ASSEMBLY INSTRUCTION
TEA TABLE

Thank you for purchasing this quality product. Be sure to check all packing material carefully for small parts which may have come loose inside the carton during shipment. Separate, identify anh count all parts and metal hardware. Compare with parts list to be sure all parts are present. If any part(s) are missing or damaged, please contact your local furniture dealer. For efficient and speedy service, please indicate the model number and code letter of part(s) needed.

***** Do not fully tighten bolts until fully assembled *****

No.	COMPONENT LIST		QTY
A	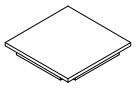	TABLE TOP	1pc
B	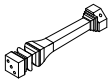	TABLE LEGS	4pcs
C	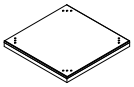	TABLE BASE	1pc

No.	HARDWARE LIST		QTY
1		Bolts 5/16x2"	12pcs
2		Lock Washer 5/16"	12pcs
3		Flat Washer 5/16"	12pcs
4		Dowel Wood	4pcs
5		Allen key K4	1pc

Step 1: Assembly Leg (B) into Table Top (A) use Bolt (1), Lock washer (2), Flat washer (3). Do not fully tighten all bolt. Then use Dowel wood (4) positioning at Legs (B).

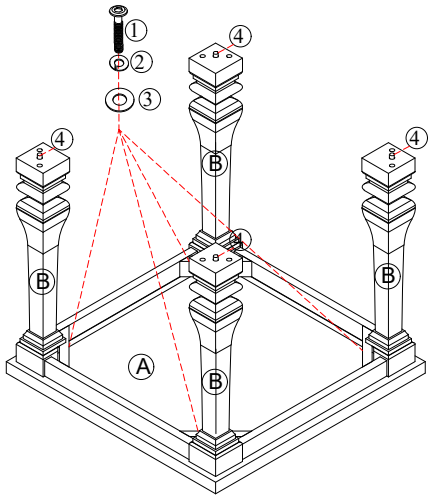

Step 2: Assembly Base (C) into Legs (B) use Bolt (1), Lock washer (2), Flat washer (3). Then use Allen key (5) fully tighten all bolt.

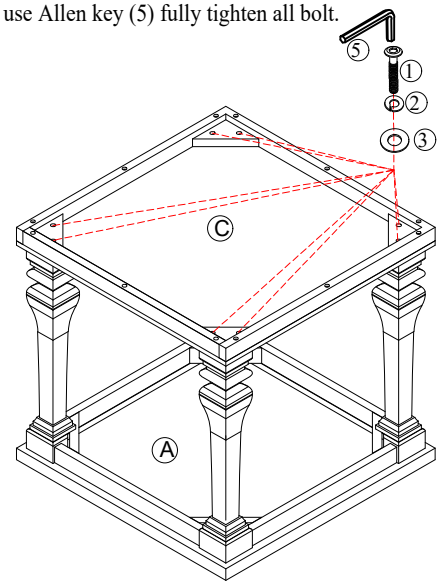

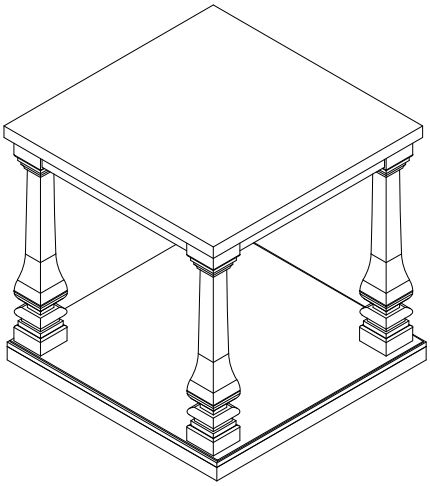

FINISH.
THANK YOU !

MADE IN VIETNAM