Owner Manual

WARRANTY

We strive to offer high quality product and we also try our best to satisfy each customer that order from us, no matter on products or services as needed. Each customer receives a record of their order, such as the order number or item receipt. For any items that are out of warranty period, you may still be able to purchase the replacement parts from our company if they are available.

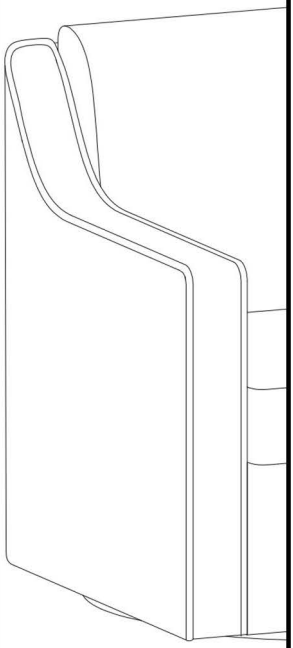

MAINTENANCE AND WARNING

- Please read the manual thoroughly before you start installing.
- Please keep the product away from sharp object.
- Packaging and small parts may have chocking hazard, please keep them away from children and pets.
- Please clean the product according to each clean code, check the product description for more information.
- Please keep the product away from fire.
- If you have any other questions, please contact us, we will be glad to help you out.
- If the product is placed under direct sunlight, the pattern or color might fade away overtime.
- Check the product periodically to make sure everything is secured and tightened.
- Always use proper tools for installation.
- Do not jump on the product.

Two people

Around 45 min

PRODUCT DESCRIPTION

Chenille offers plush warmth, leather delivers sleek durability, and cotton blend maximizes airflow, each fabric is tested for longevity.

The ergonomic backrest features targeted lumbar support, while the seat's multi density construction evenly distributes body weight.

Glide across floors with the industrial strength swivel base, reinforced by a metal foundation (350 lb limit).

High density foam, synthetic fibers and spring package allows the cushion to be as comfortable as you can imagine.

Compact footprint suits small spaces, while the rotation function eliminates the need for repositioning.

EXPLODED VIEW

The product's left and right are determined by sitting posture

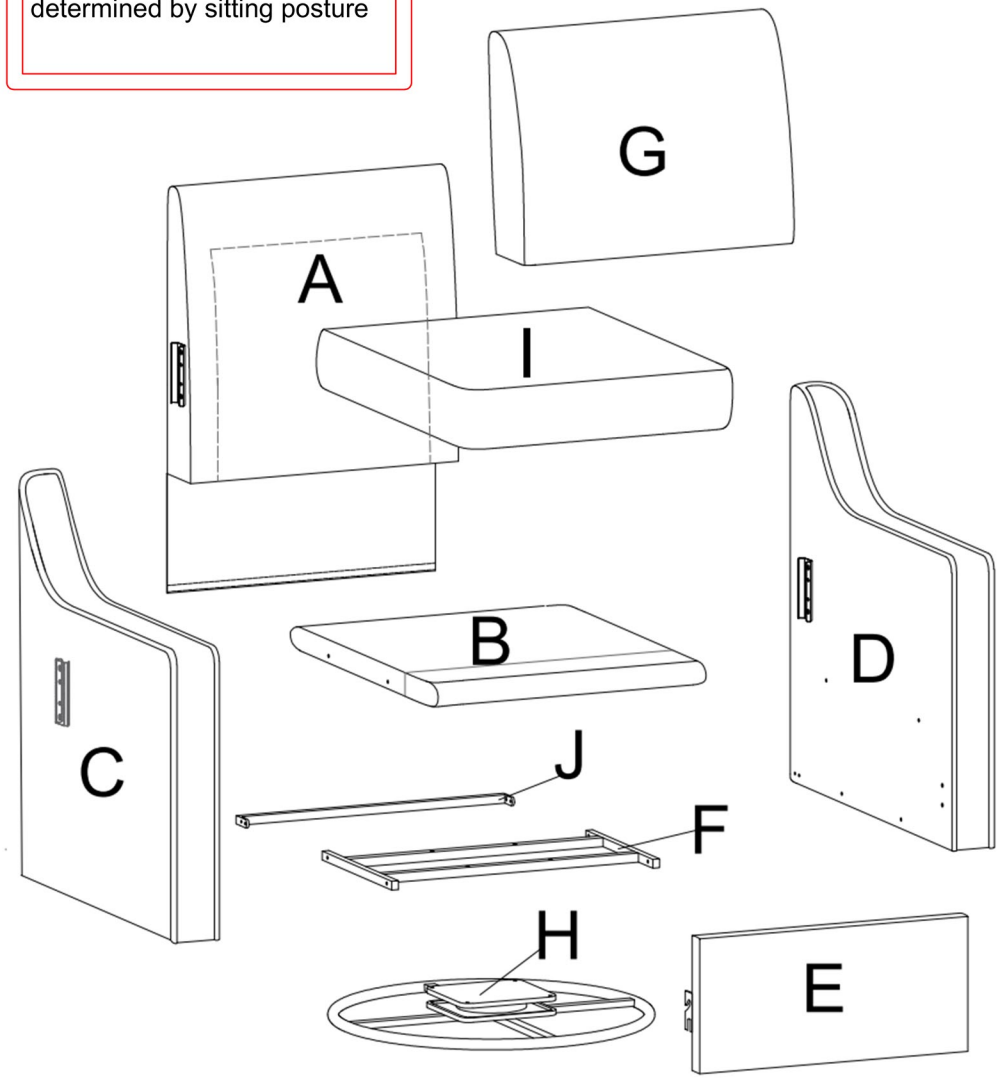

PARTS

A*1

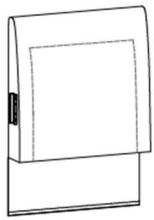

Backrest

B*1

Seat frame

C*1

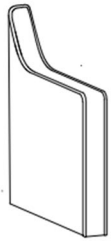

Right arm

D*1

Left arm

E*1

Front panel

F*1

Metal frame

J*1

Rear cross bar

H*1

Swivel base

I*1

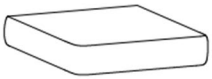

Seat cushion

G*1

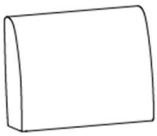

Back cushion

HARDWARE

TOOL LIST

NOTE: Designated with (★) We provide additional spare parts in the hardware package

①*12	②*4	③*4	④*1
			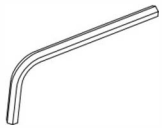
★M6*20 Bolts	★M6*45 Bolts	★M6*50 Bolts	Allen key

Please make sure all hardware & packing material fitting the list. Especially some small accessories may be missing during transportation. Please contact us if you have any question.

step 1

Unzipp the zipper from the bottom of the armrests as shown, and take out the backrest (A), then zip back the zipper.

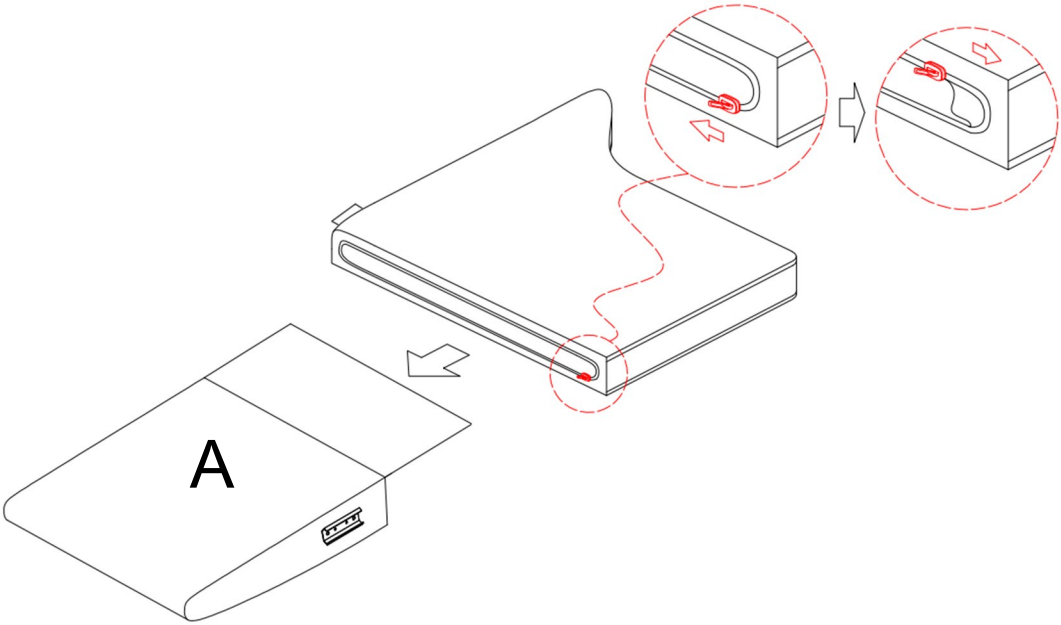

step 2

Place the sofa on its feet, and align the connectors on its backrest with the slots on the armrests as shown. Make sure both connectors are correctly aligned before pushing down.

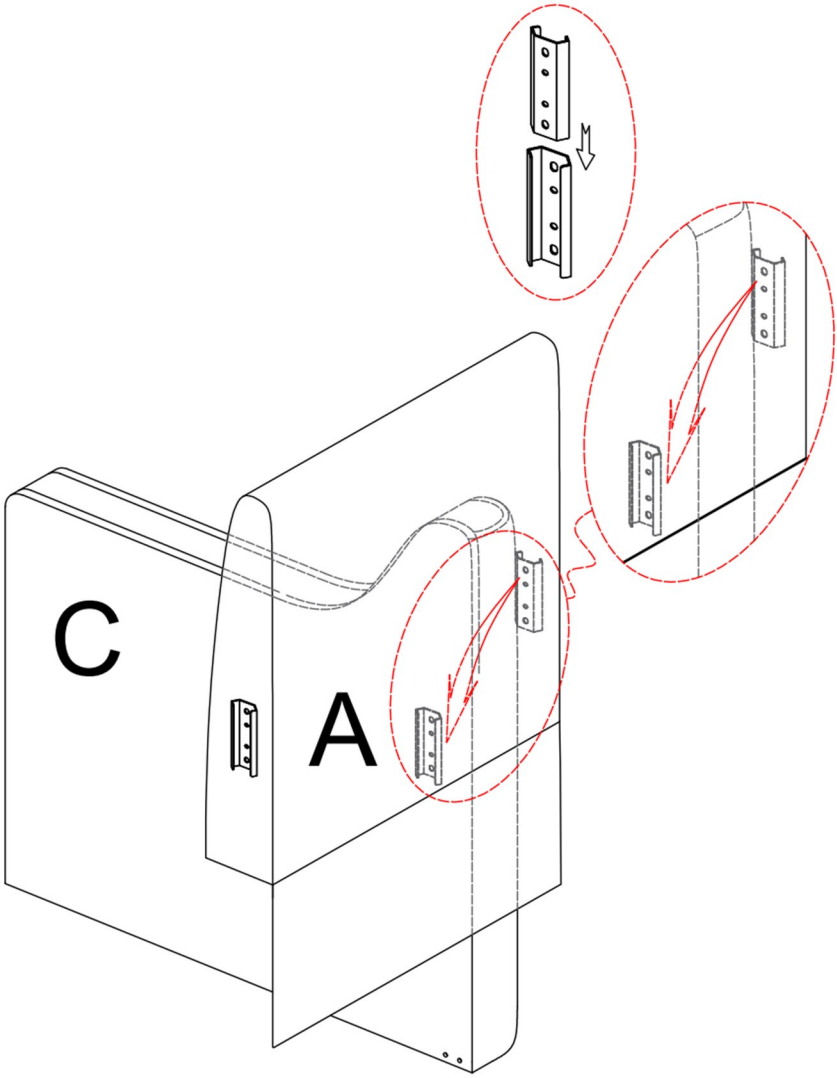

step 3

Place the sofa on its feet, and align the connectors on its backrest with the slots on the armrests as shown. Make sure both connectors are correctly aligned before pushing down.

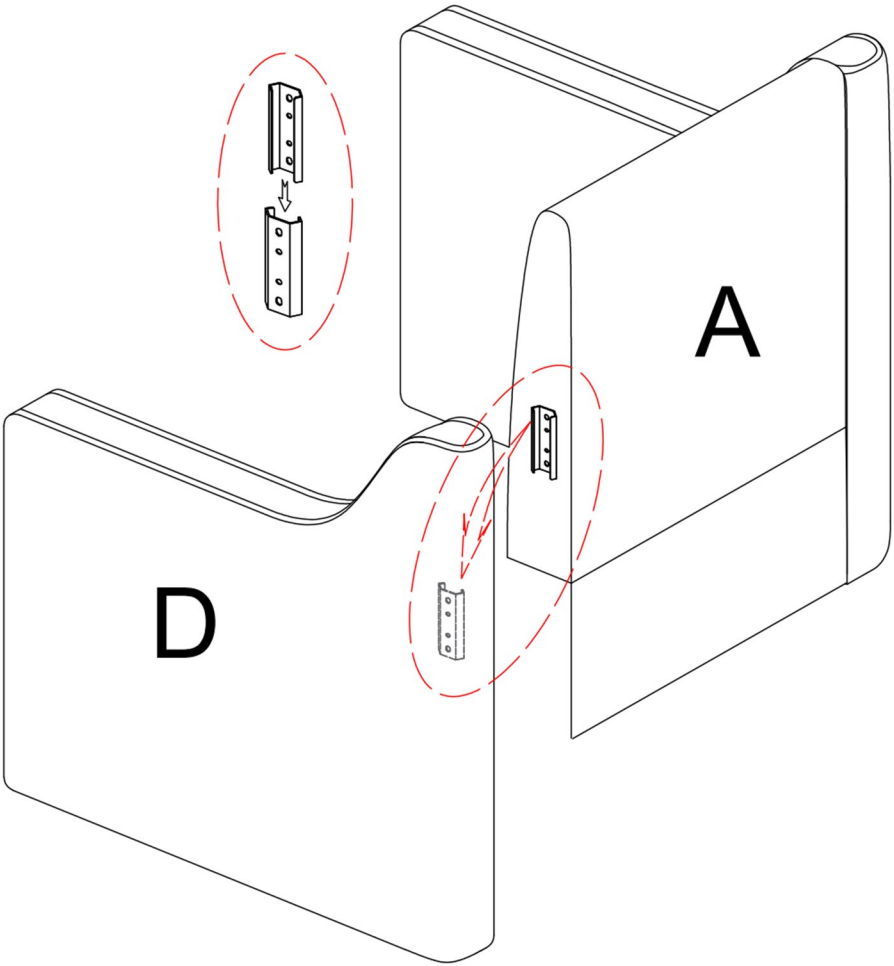

step 4

Place the assembled part on the ground as shown with the backrest on the ground.
Install the other armrest (C) as shown, use the allen key (4) provided to tighten all the bolts (3) for 1/3 of their length.

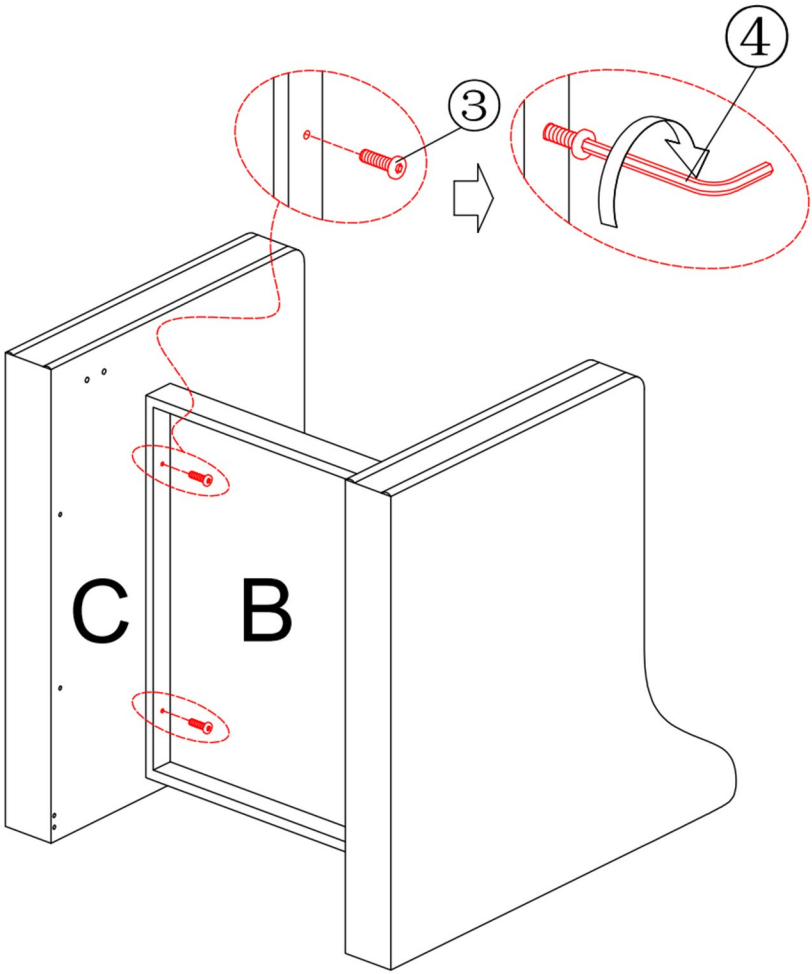

step 5

Place the assembled part on the ground as shown with the backrest on the ground.

Place the armrest (D) on its side, and install the seat frame (B) as shown, use the allen key (4) provided to tighten all the bolts (3) for 1/3 of their length.

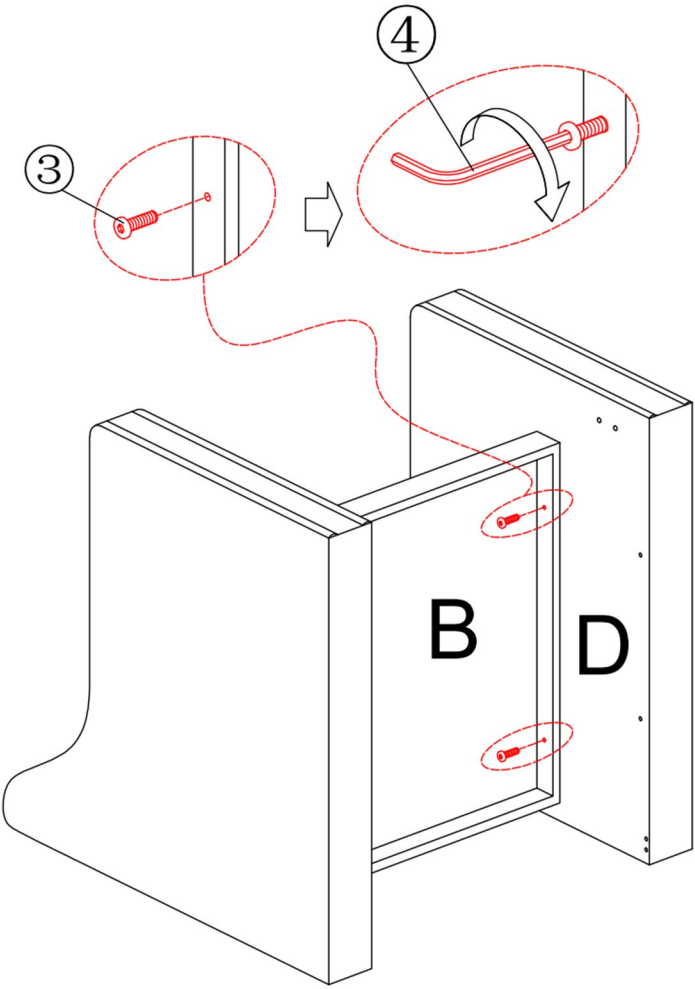

step 6

Use the bolts from last two steps to hang the front panel (E) into the hold with a notch on iron plate (located on the sides of the front panel) as shown. Then use the allen key provided to tighten both bolts, make sure both bolts are fully tightened before next step. Repeat the step for the other side.

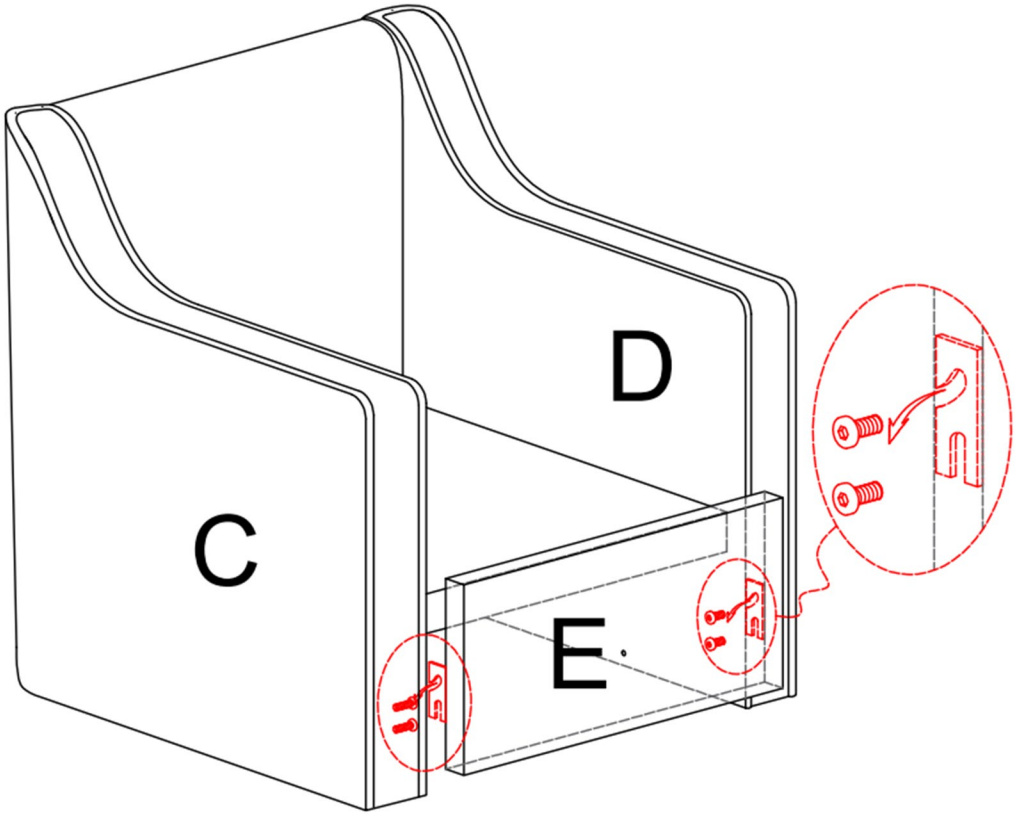

step 7

Install the rear cross bar (J) as shown, use the allen key (4) provided to tighten all four bolts(1), DO NOT tighten the bolts completely. Please make sure the direction of the Velcro tape on the rear cross bar is correct before install.

Fully tighten the bolts on the seat frame from the step 4 & step 5, make sure they are completely tightened.

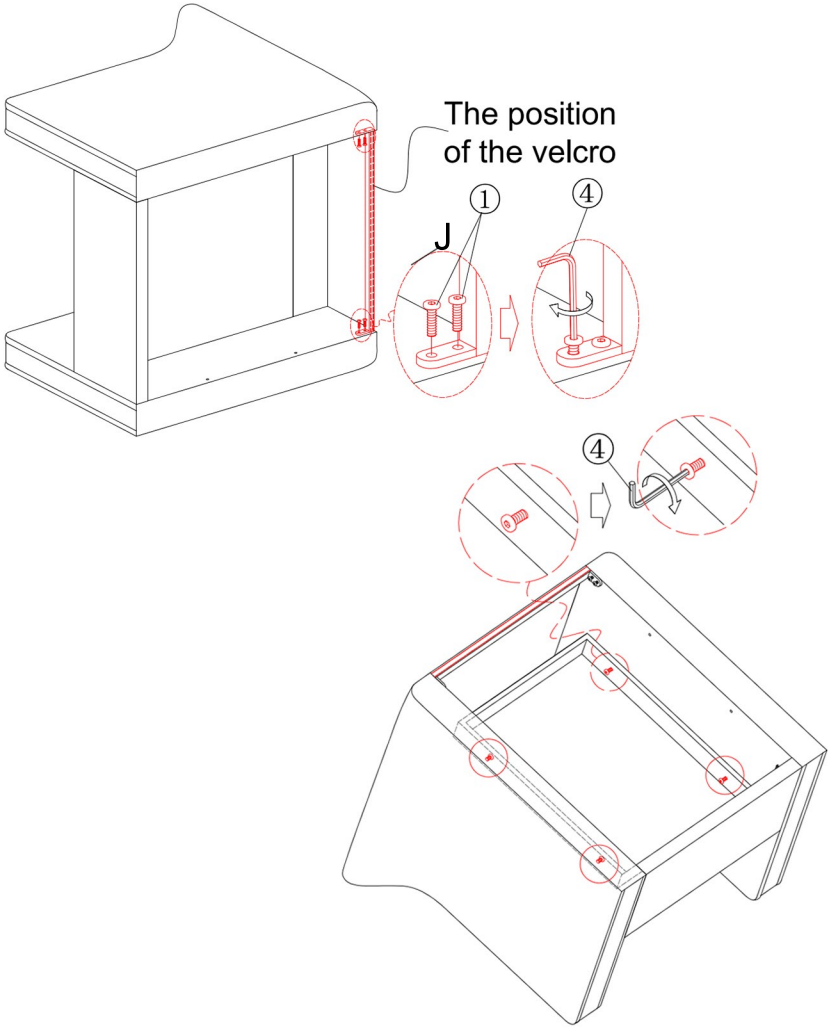

step 8

Place the sofa upside down and install the metal frame on its bottom.

Attention: Please make sure the bolt holes with threads on the metal frame are facing outward.

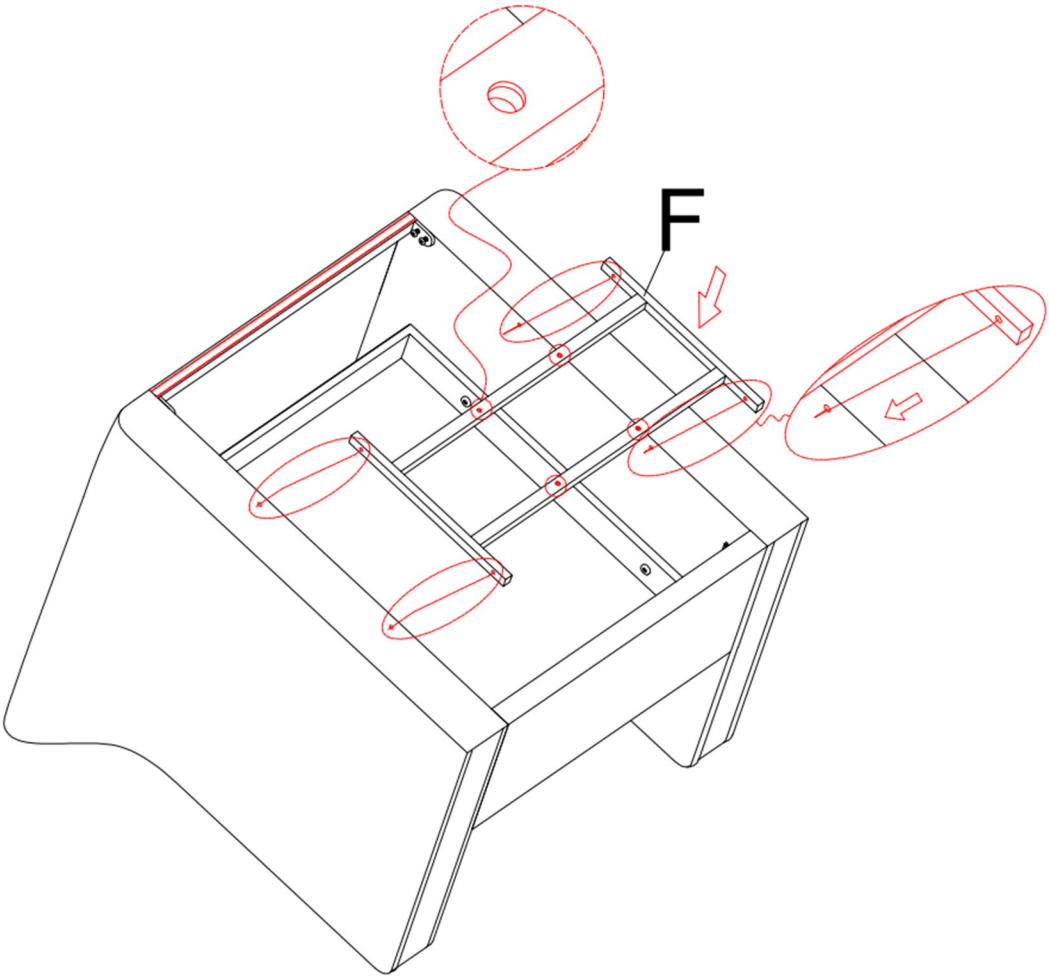

step 9

Place the bolts (2) through the bolt holes on both metal frame and armrests as shown, then tighten the bolts, make sure all the bolts are fully tightened before next step.

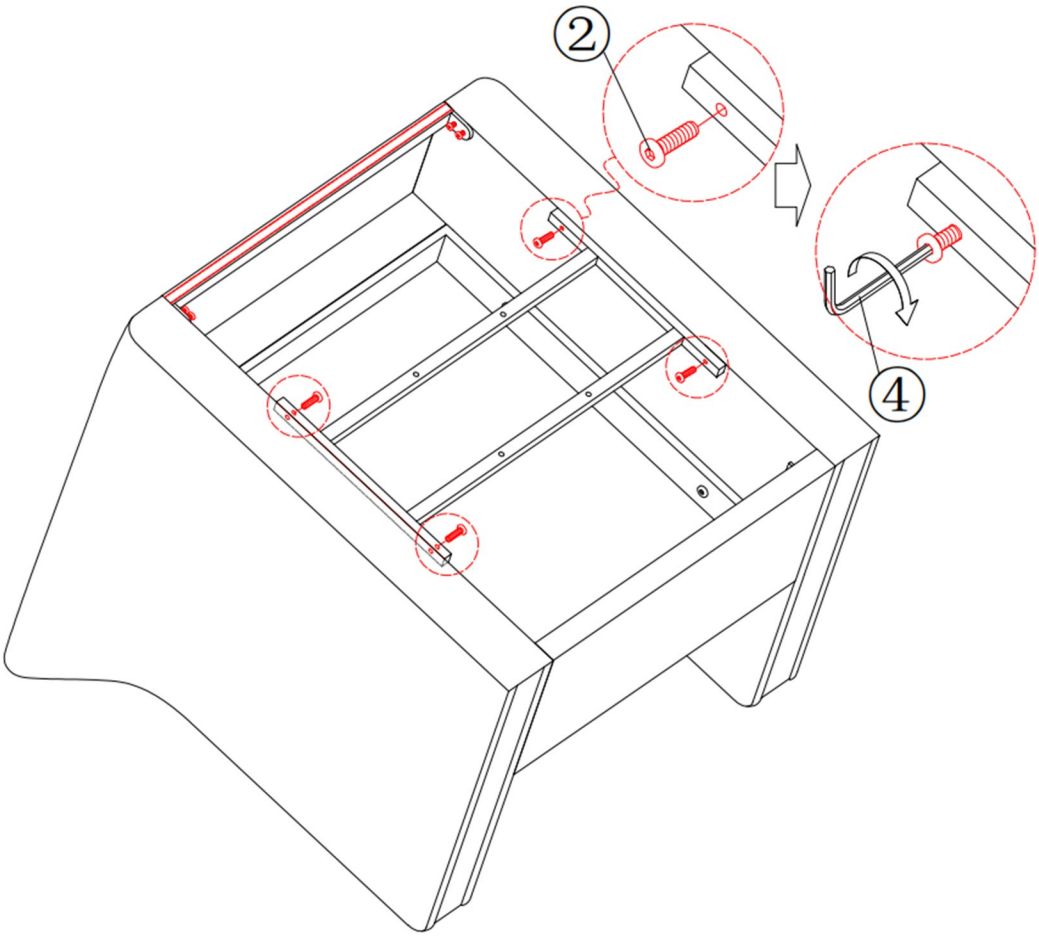

step 10

Fully tighten the bolts on the rear cross bar from the step 7 and front panel, make sure they are completely tightened.

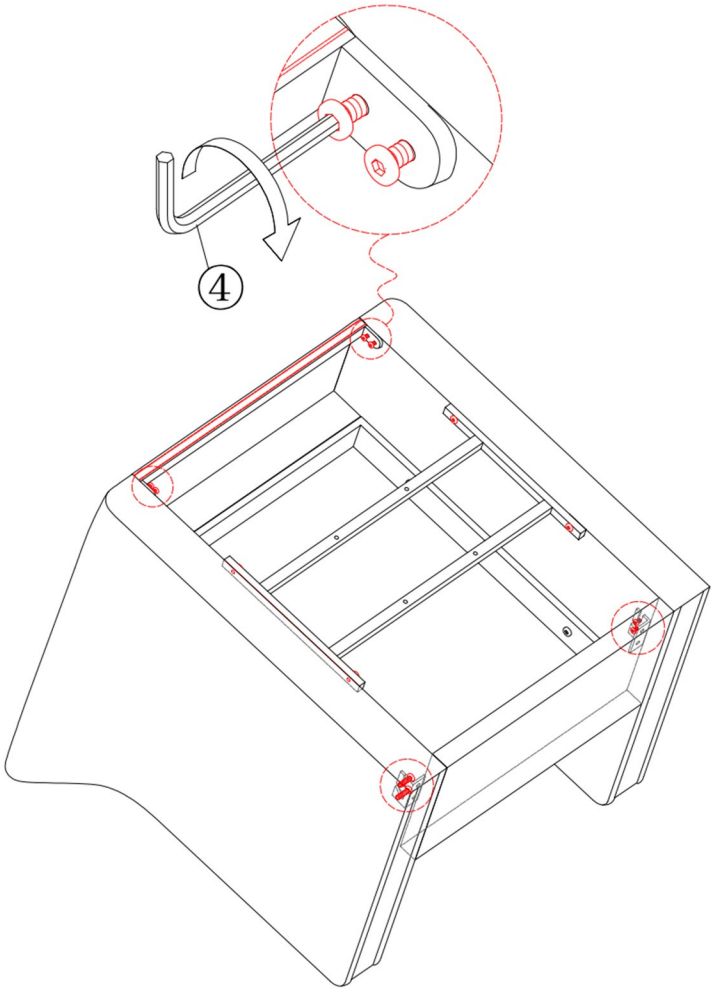

step 11

Then install the swivel base (H) onto the metal frame as shown, make sure all the bolts are fully tightened, then uncover the Velcro strip cover on the bottom of the back cloth, and stick the Velcro to the bottom of the back panel.

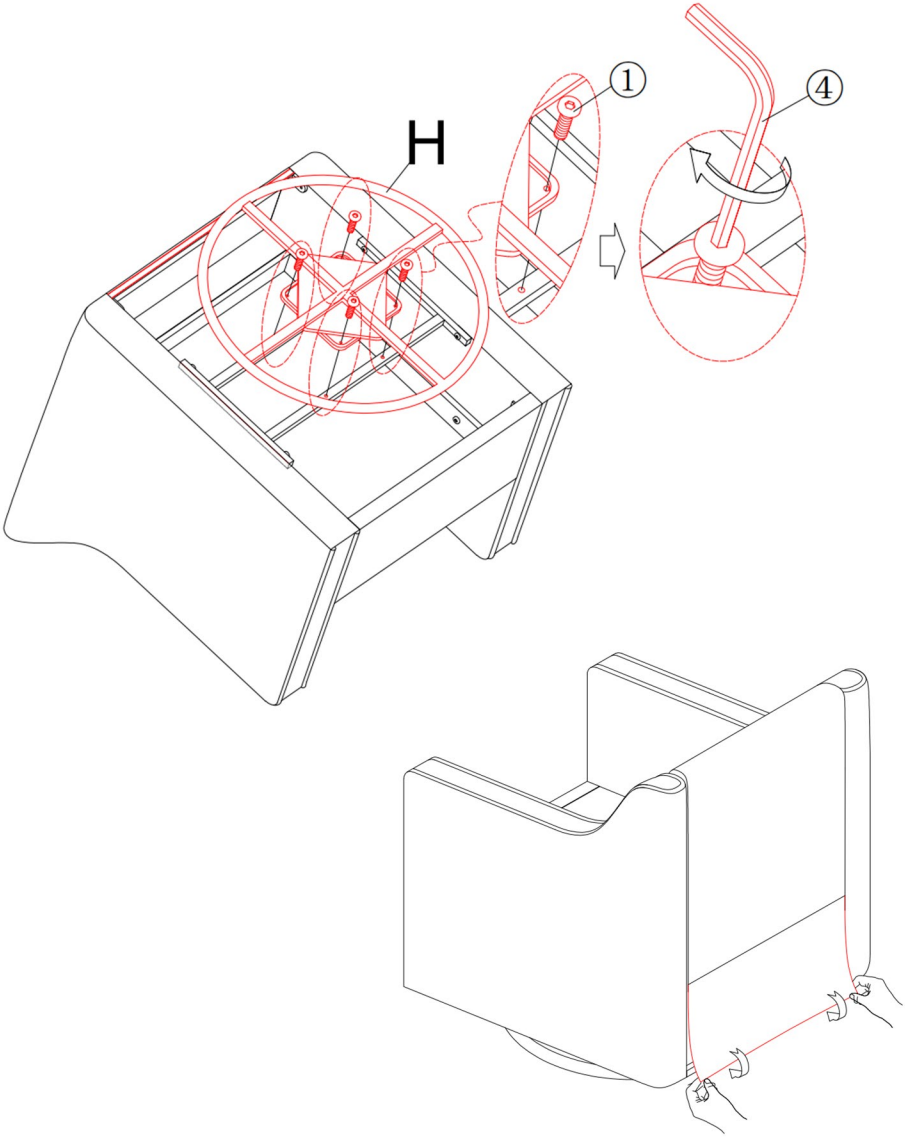

step 12

Cut the plastic air compression bags, and take out cushions (I). Place them on the side for recover to their original shape, the whole process might take up to 48 hours, you may gently slap on them to speed up the process.

Please be careful, do not cut yourself or product.

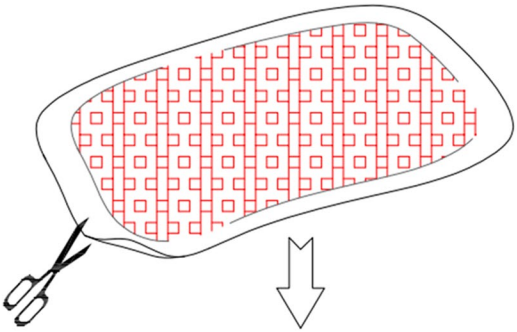

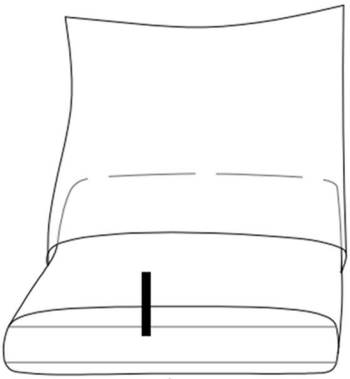

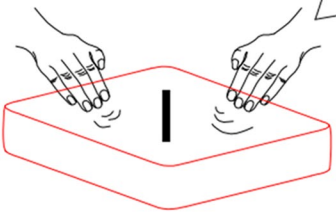

step 13

If you have the leather upholstered chair, please follow this step.

How to Put on the Cushion Cover

1

1.Take the cushion covers and inners out of the carton.

2

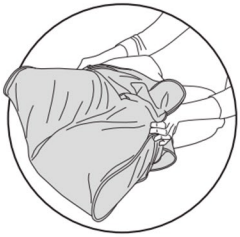

2.Fold the inner in half, pushing the sides together,then begin to slide the cover onto it.

3

3.Align both far corners, then gently compress insert while fitting cover around it.

4

4.To avoid a stuck zipper, please pull the fabric away from the zipper before moving forward.

5

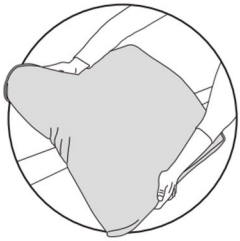

5.When all done, please pat the cushion or give it a little shake to make it more flat.

step 14

Please the seat cushion(I) on it.
Please the back cushion(G) on it.

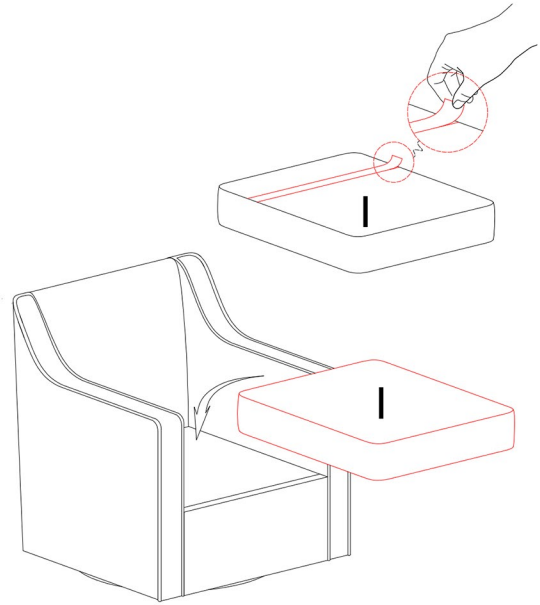

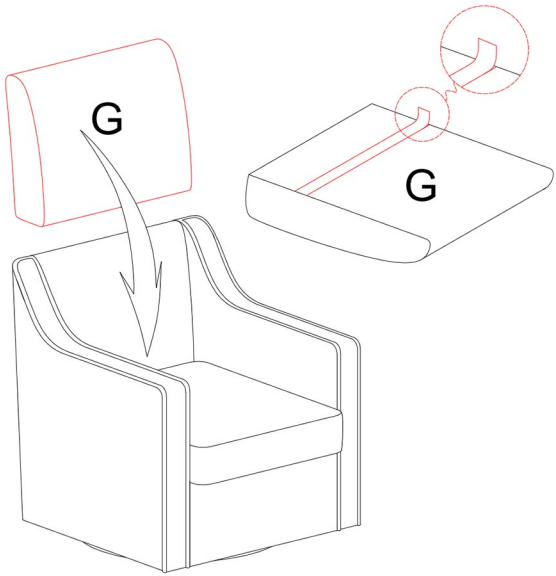
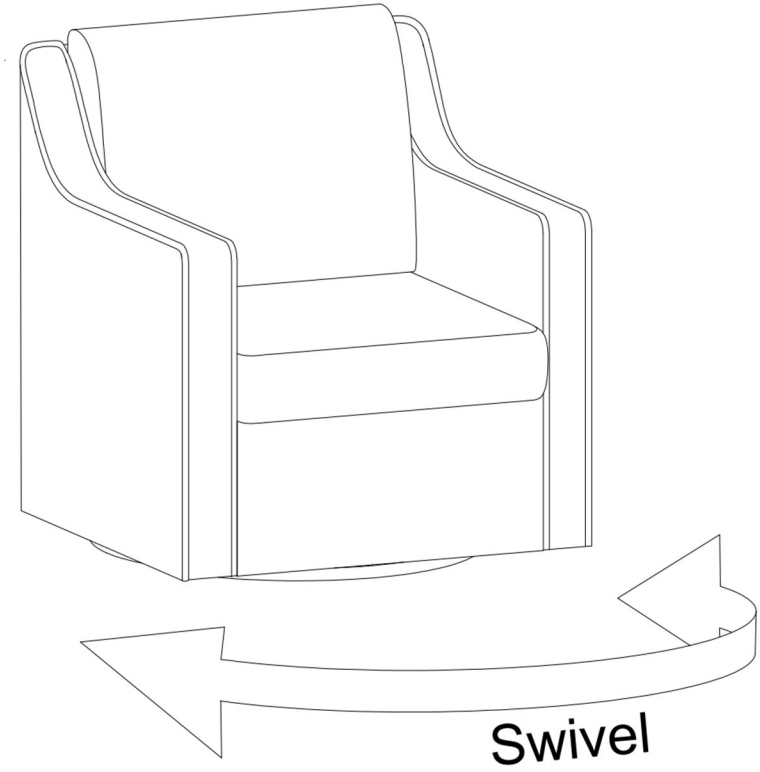
step 15