Coffee Table

Assembly Instruction - Please keep properly for future reference.

If you find any missing boxes, damaged parts, or accessory shortages, please contact the customer service team of your purchasing channel immediately. We will resolve the issue as quickly as possible.

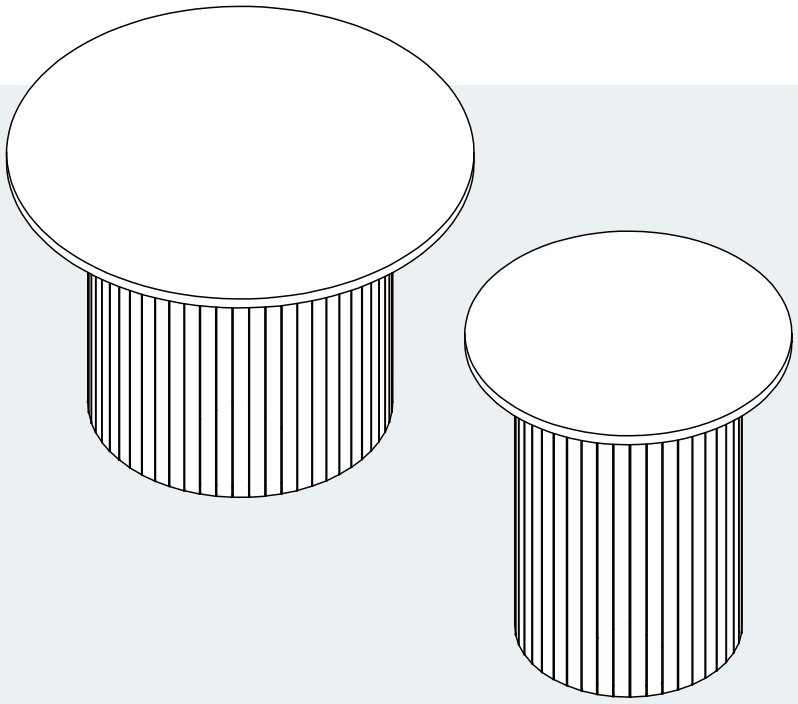

Dimensions

Width - 23.6 inch
Depth - 23.6 inch
Height - 16.1 inch

Dimensions

Width - 16.5 inch
Depth - 16.5 inch
Height - 18.9 inch

EN

CONTACT US

- **Email: service@grandtunnel.com**
  In order to receive assistance more quickly, please provide

THE FOLLOWING INFORMATION:

- Order number
- Purchase platform
- Purchase date
- Detailed description of the issue along with photos (if applicable)

Important – Please read these instructions carefully before starting the installation.

Safety and Care Advice

Important – Please read these instructions fully before starting assembly

• Check you have all the components and tools listed on the following pages.

• Remove all fittings from the plastic bags and separate them into their groups.

• Keep children and animals away from the work area, small parts could choke if swallowed.

• Make sure you have enough space to layout the parts before starting.

• During assembly do not stand or put weight on the product, this could cause damage.

• Assemble the item as close to its final position (in the same room) as possible.

• Assemble on a soft level surface to avoid damaging the unit or your floor.

• Parts of the assembly will be easier with 2 people.



• To reduce the likelihood of damaging your product please ensure that your power drill is set on a low torque setting.

Care and maintenance

• Only clean using a damp cloth and mild detergent, do no use bleach or abrasive cleaners.

• From time to time check that there are no loose screws on this unit.

• This product should not be discarded with household waste. Take to your local authority waste disposal centre.

Handy Hints

• Assemble all parts and bolts loosely during assembly, only once the product is complete should you fully tighten the bolts

• Regularly check and ensure that all bolts and fittings are tightend properly.

CUSTOMER SERVICE GUIDE

Thank you for choosing our product! We are committed to providing you with excellent service. If you find any missing parts, damaged packaging, or product damage after receiving all packages, please follow the steps below to quickly contact our customer service team. We will do our best to resolve your issue.

1. Missing Parts

Verify Parts:

1. Refer to the “Parts List” in the manual to verify the name, specifications, and quantity of the missing parts.
2. Take a clear photo of the parts list and mark the missing parts with detailed information, e.g., “Missing 5 pieces of M6x30mm screws.”

Contact Us:

· By Email:
Send an email to service@grandtunnel.com, with the subject line “Missing Parts Issue.” Include the following in the email:
· A description of the missing parts and a photo of the parts list.
· Order details (order number, purchase platform, purchase date).

2. Product or Packaging Damage

If it affects normal use:

Steps:

1. Take clear photos or videos showing the damaged parts and the extent of the damage (multi-angle shots are recommended).
2. Email the photos/videos along with other details to service@grandtunnel.com, with the subject line “Product Damage Issue.”

Resolution:

After verification, we will arrange for a replacement part, product exchange, or refund as quickly as possible.

If it does not affect normal use:

Steps:

1. Contact our customer service team (by email: service@grandtunnel.com).
2. Provide a description of the damage and include relevant photos or videos.

Resolution:

We will provide repair guidance or an appropriate compensation plan based on the specific situation.

Contact Us:

· Customer Service Email: service@grandtunnel.com

Helpful Tips

To process your issue efficiently, please prepare the following information:
· Order details (order number, purchase platform, purchase date).
· Clear photos or videos.
· We are committed to providing quick and professional solutions, no matter the size of the issue, to ensure your satisfaction.
Thank you for your trust and support! We hope you enjoy using our product!

Parts List - Fittings

Please check you have all the fittings listed below

Note: The quantities below are the correct amount to complete the assembly. In some cases more fittings may be supplied than are required.

A  6*30mm Wooden Dowel x 16	**B**  4*35mm Screw x 16	**C**  6*25mm Bolt x 8
D  Allen Key x 1	**E**  Felt Pad x 8	

Tools required

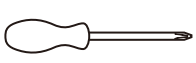

Phllips screwdriver
(medium & large)

Ruler - Use this ruler to help correctly identify the screws

mm

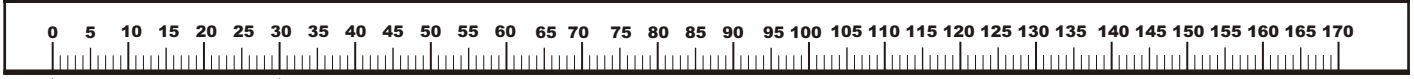

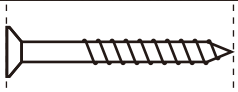

The screws length is measured from the head to the point (30mm screw shown).



Parts List - Panels

Please check you have all the panels listed below

1

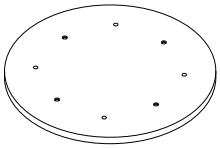

(Ø38.5 x 1.5cm) x1

2

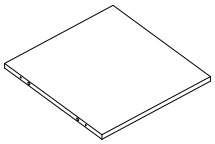

(38.3 x 36.5 x 1.5cm) x1

3

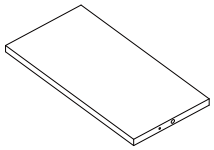

(18.4 x 36.5 x 1.5cm) x2

4

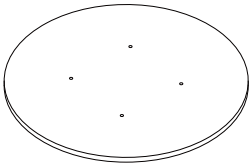

(Ø60 x 1.5cm) x1

5

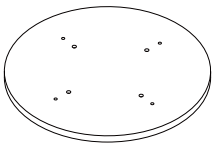

(Ø38.5 x 1.5cm) x1

6

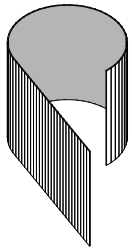

(39.4 x 122.4 x 0.47cm) x1

7

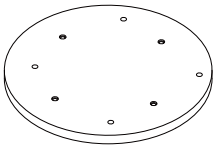

(Ø28.5 x 1.5cm) x1

8

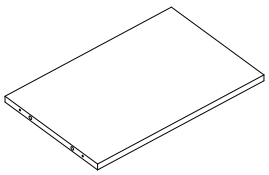

(28.3 x 43.5 x 1.5cm) x1

9

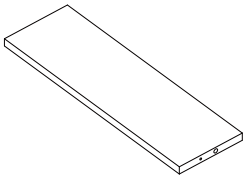

(13.4 x 43.5 x 1.5cm) x2

10

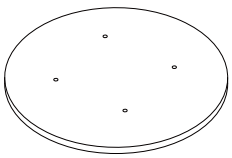

(Ø42 x 1.5cm) x1

11

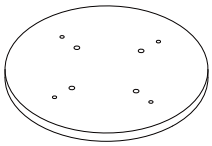

(Ø28.5 x 1.5cm) x1

12

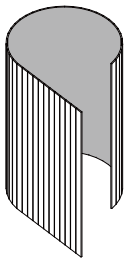

(46.4 x 90.8 x 0.47cm) x1

Assembly Instructions

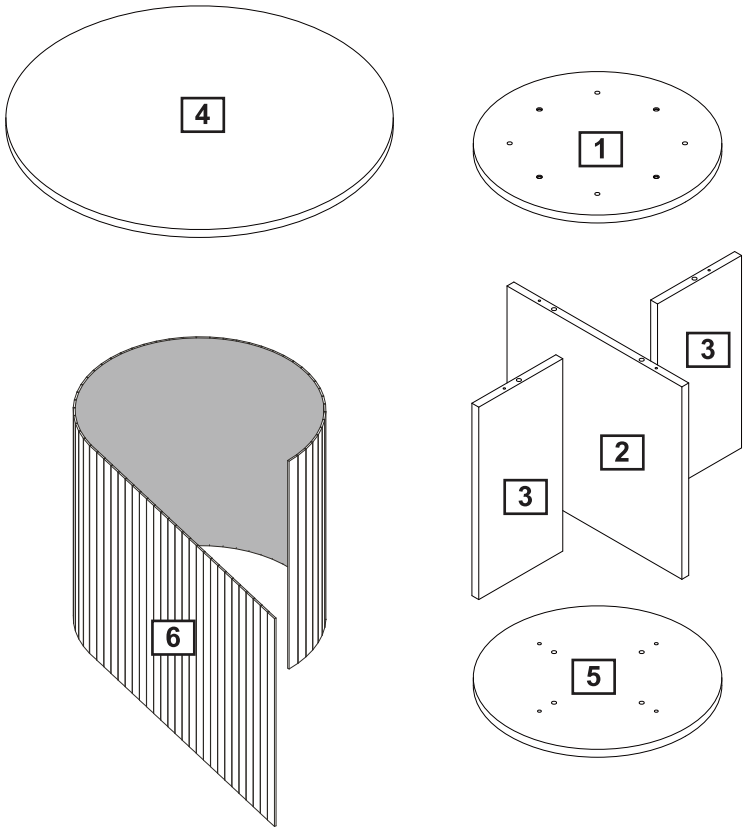

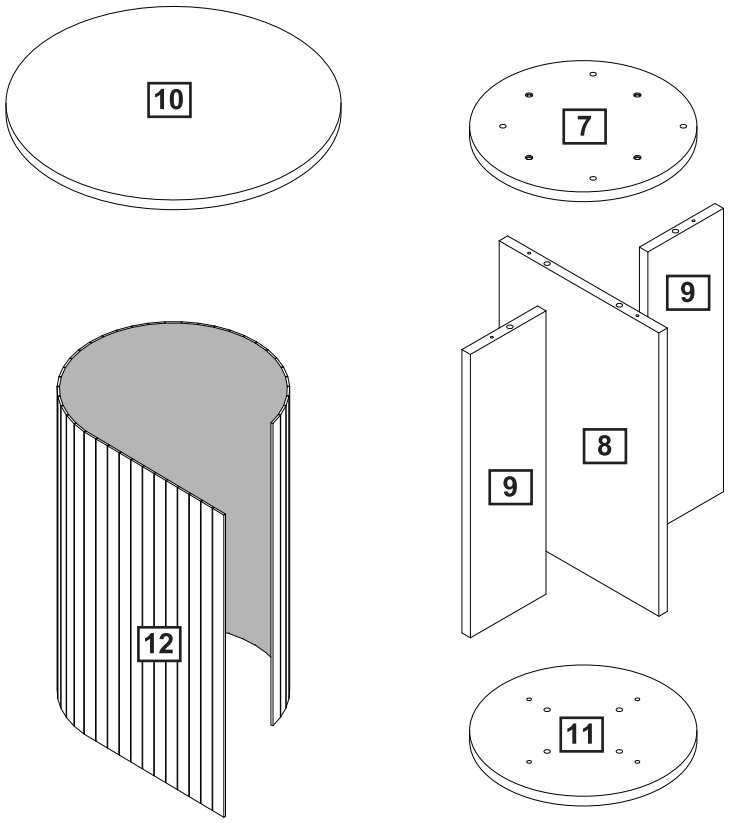

Assembly Instructions

Step 1

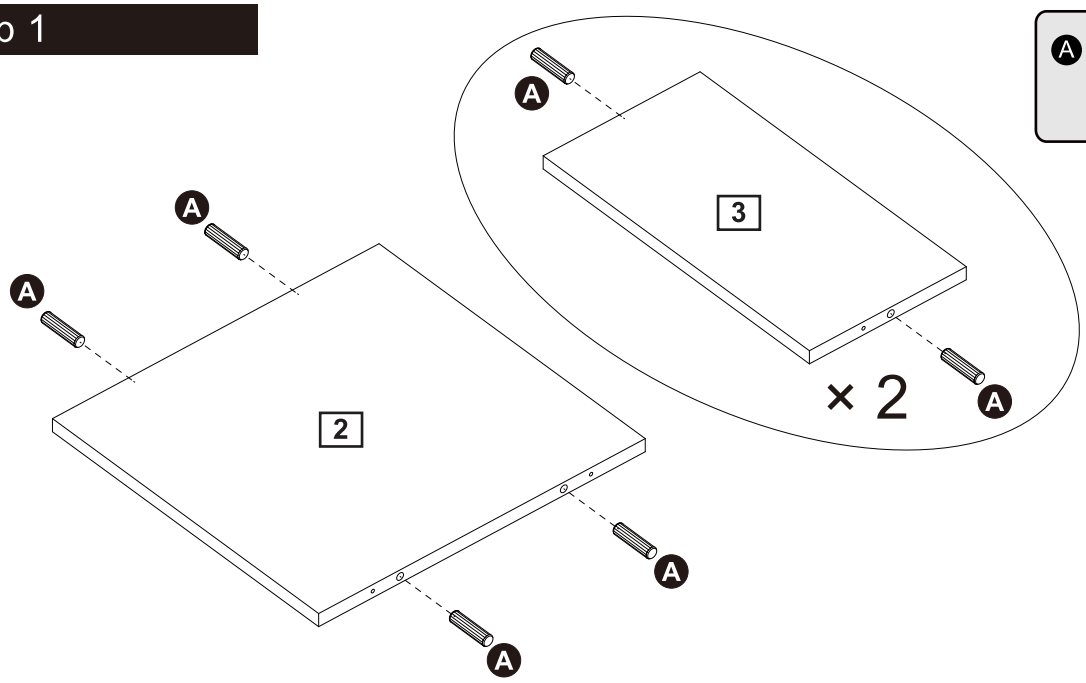

Insert wooden dowel (A) into part (2, 3).

Step 2

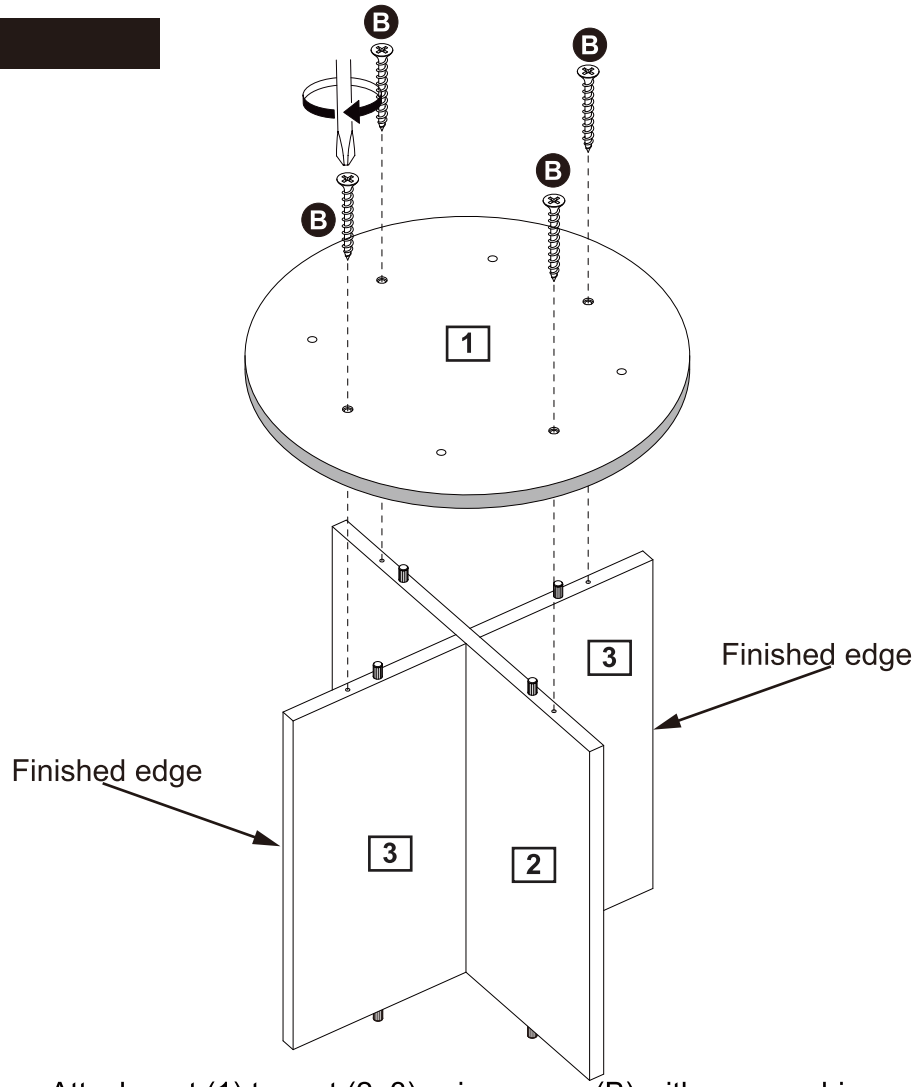

Attach part (1) to part (2, 3) using screw (B) with a screwdriver.

Assembly Instructions

Step 3

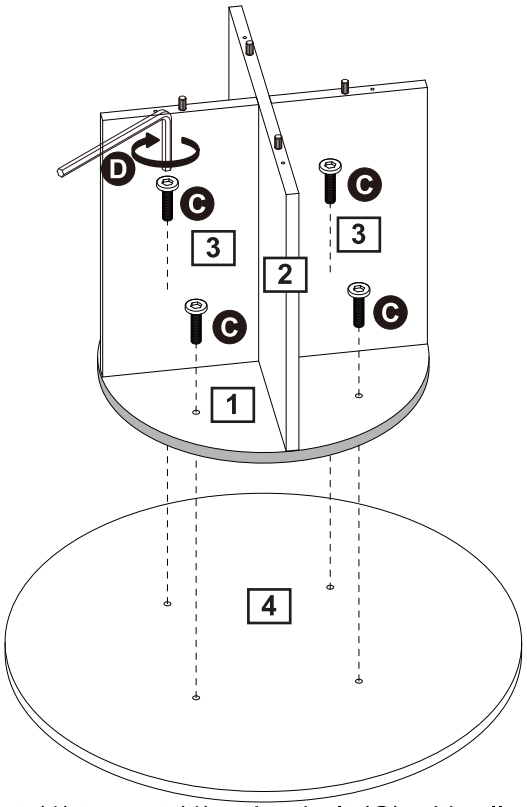

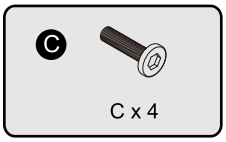

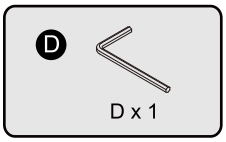

Attach part (1) to part (4) using bolt (C) with allen key (D).

Step 4

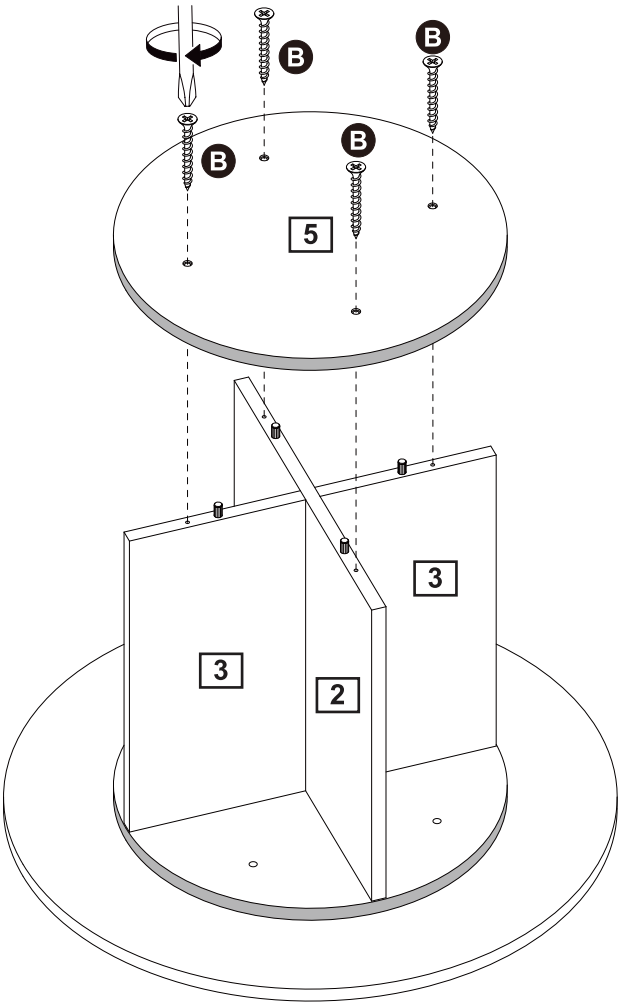

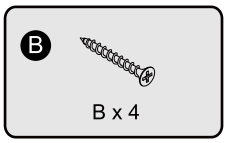

Attach part (5) to part (2, 3) using screw (B) with a screwdriver.

Assembly Instructions

Step 5

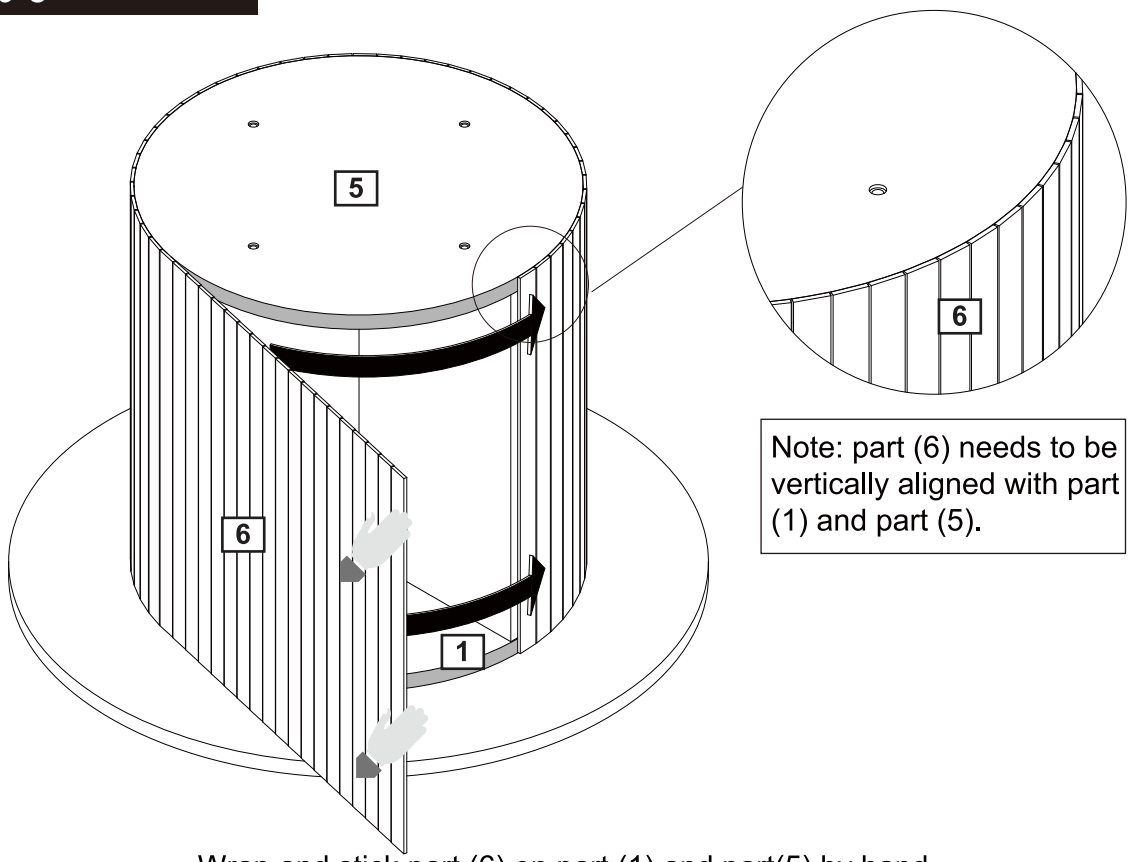

Note: part (6) needs to be vertically aligned with part (1) and part (5).

Wrap and stick part (6) on part (1) and part(5) by hand.

Step 6

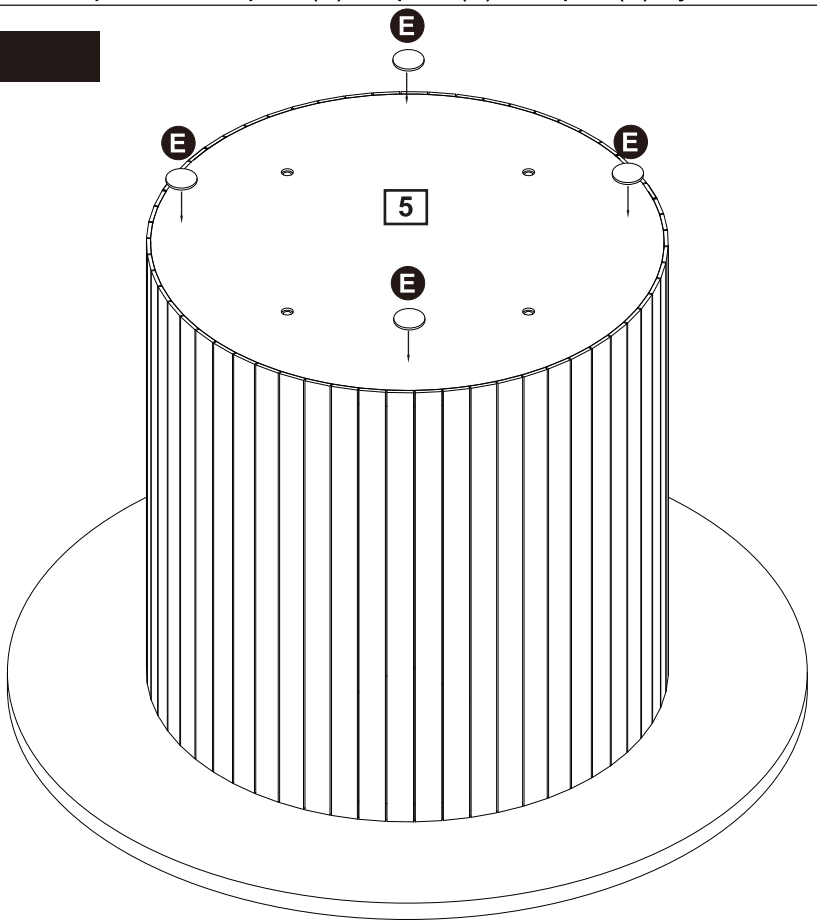

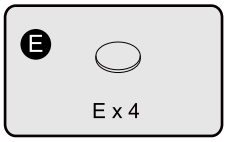

Attach felt pads (E) to part (5).

Assembly Instructions

Step 7

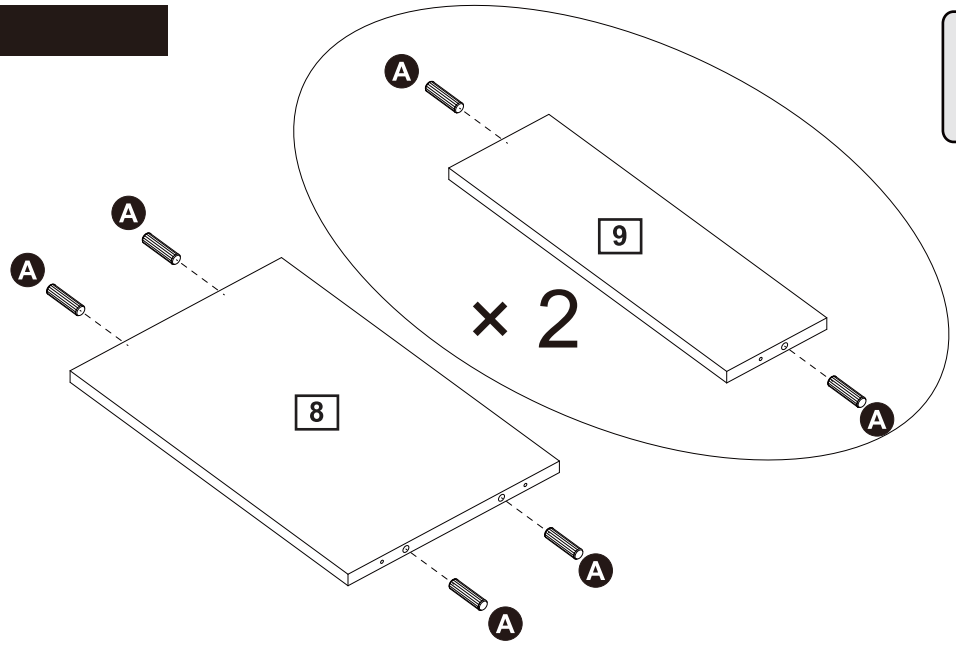

Insert wooden dowel (A) into part (8, 9).

Step 8

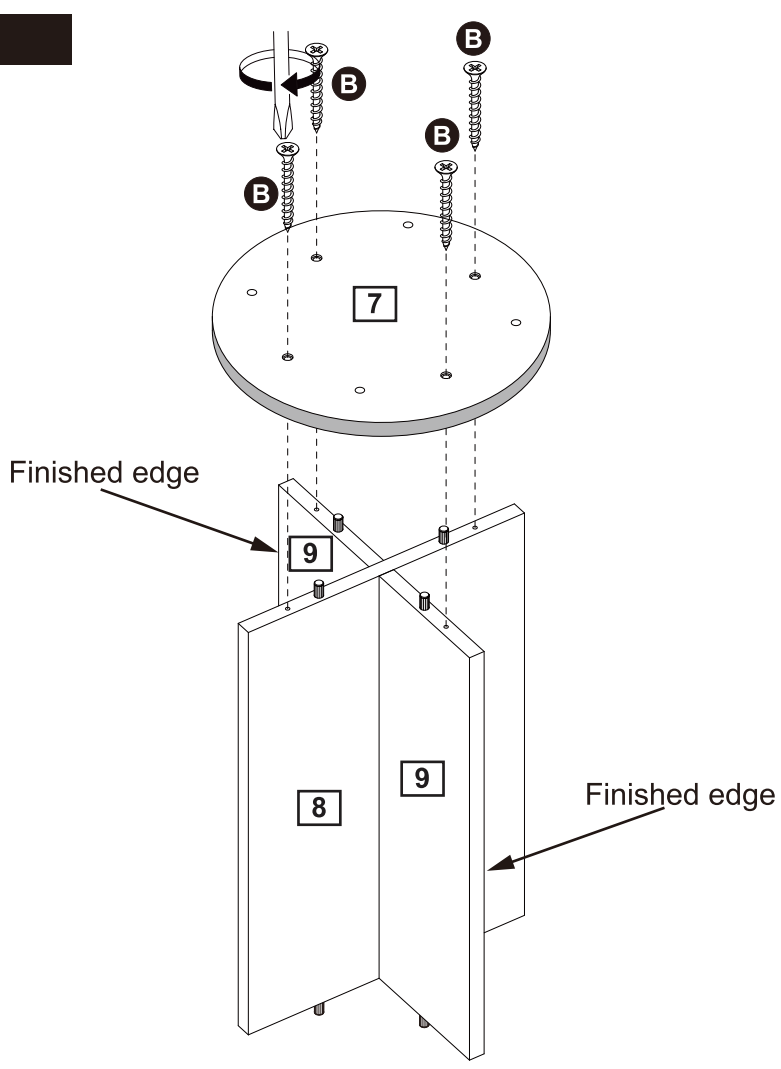

Attach part (7) to part (8, 9) using screw (B) with a screwdriver.

Assembly Instructions

Step 9

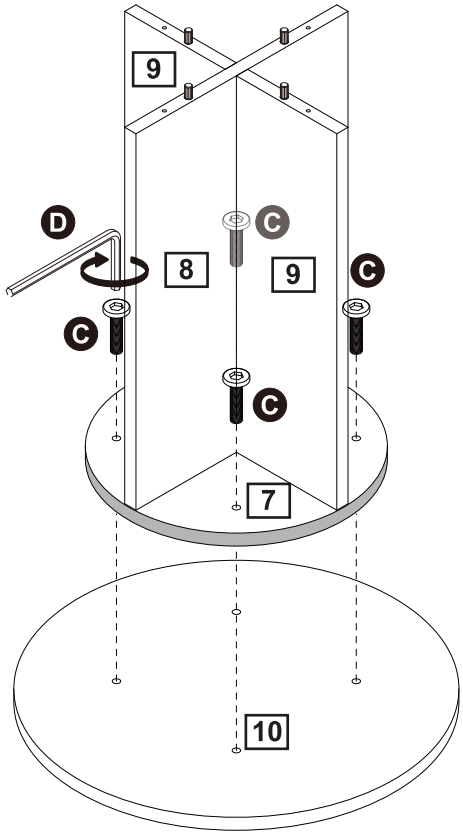

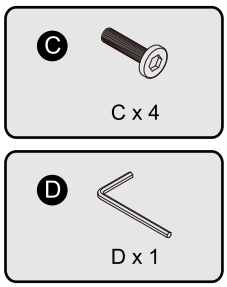

Attach part (7) to part (10) using bolt (C) with allen key (D).

Step 10

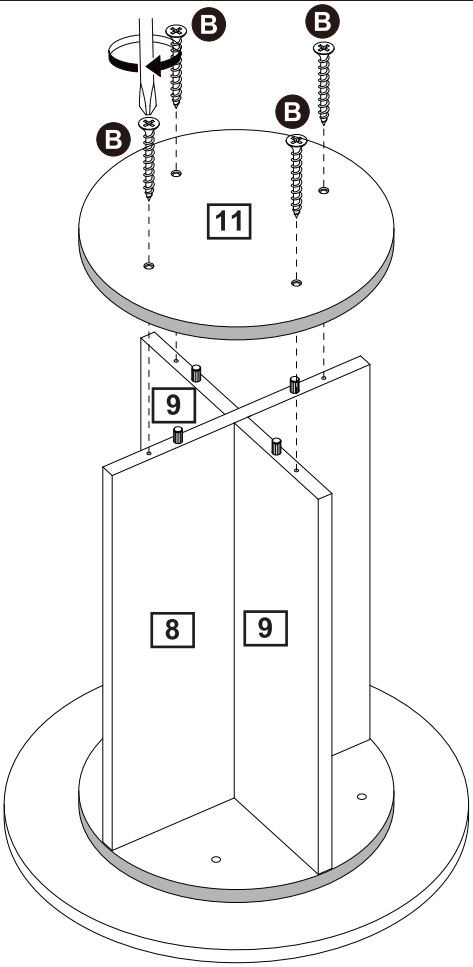

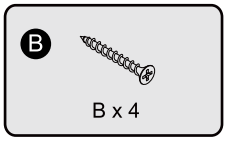

Attach part (11) to part (8, 9) using screw (B) with a screwdriver.

Assembly Instructions

Step 11

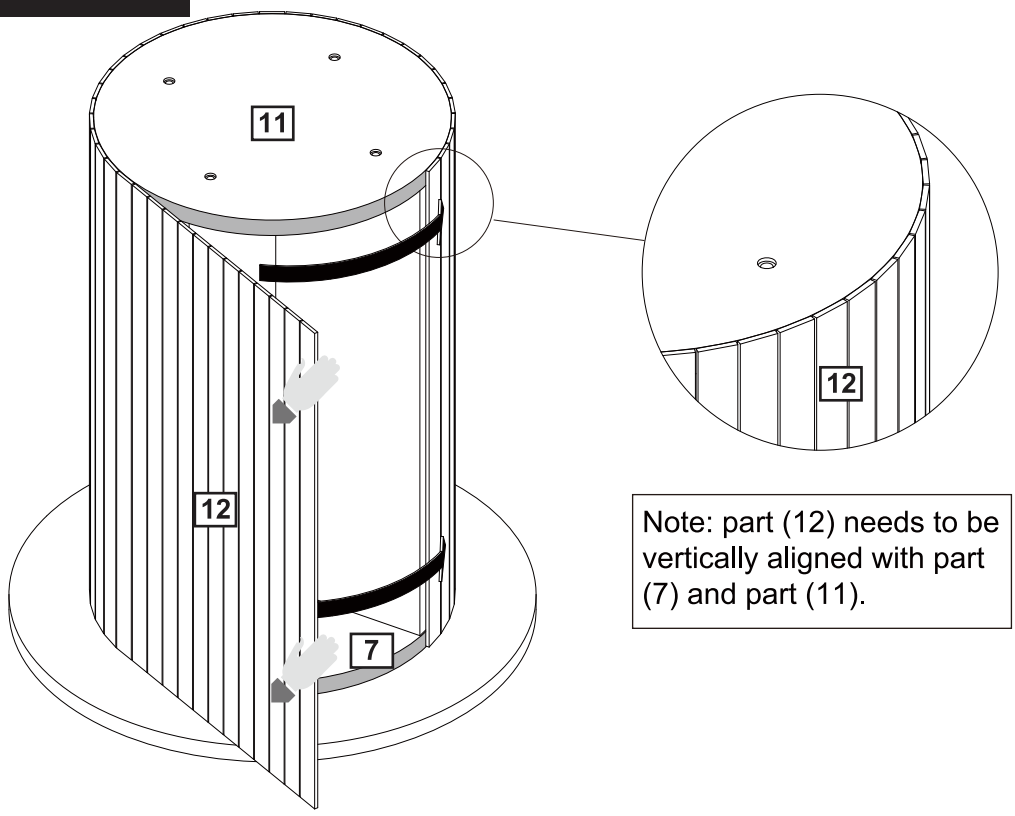

Wrap and stick part (12) on part (7) and part(11) by hand.

Step 12

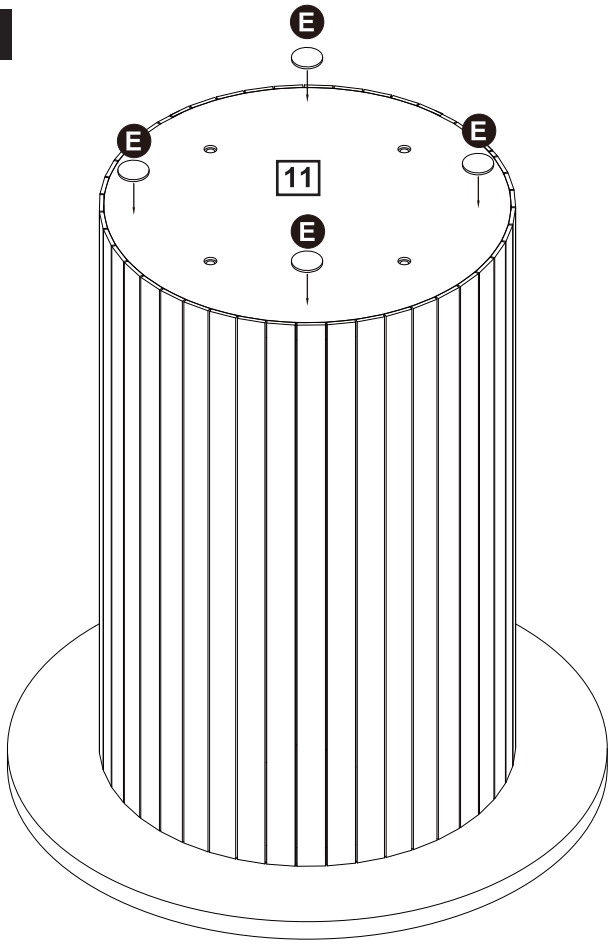

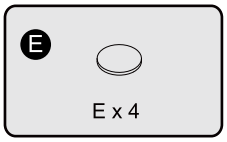

Attach felt pads (E) to part (11).

Assembly Instructions

Step 13

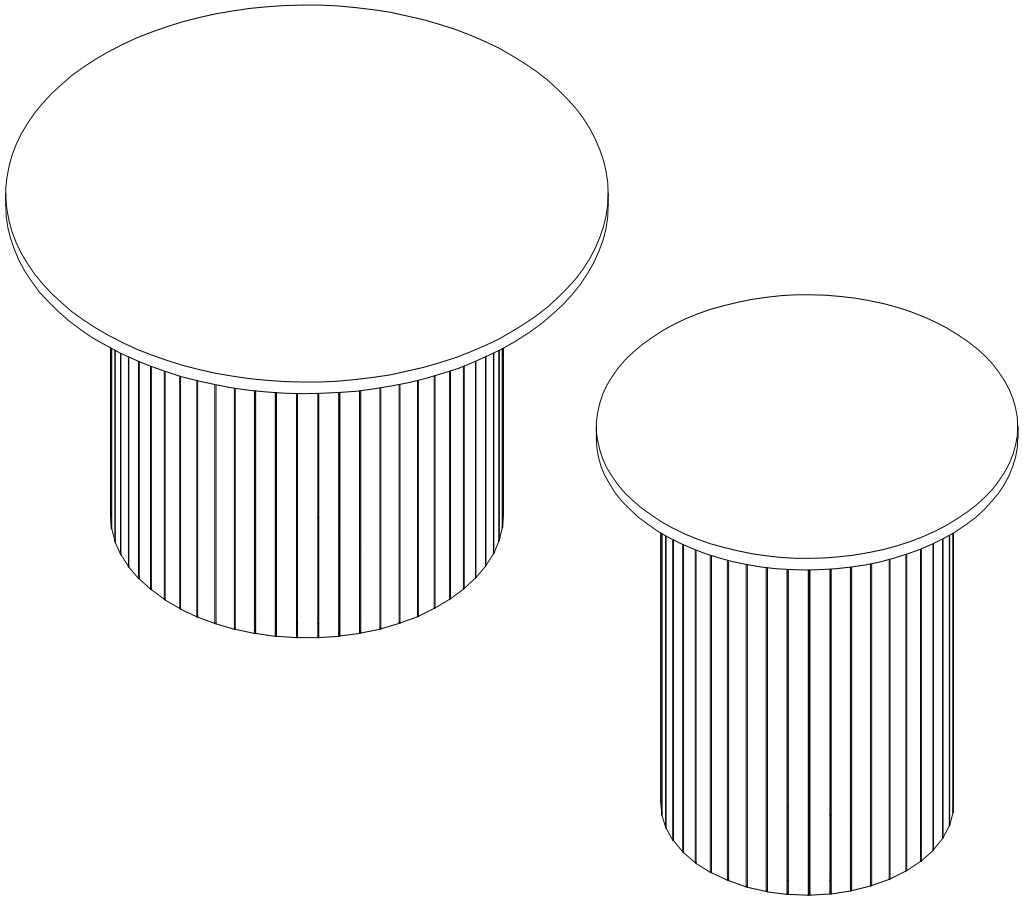

Assembly is complete

Coffee Table

SKU:
BF24R2-1B4A0
BF24R2-1B4B0

V1.0