Assembly Instructions

Caution : You must read this before you proceed

Care & Maintenance

- Not for commercial use. For residential use only.
- Do not put hot items directly on furniture surface.
- Do not clean furniture with harsh cleansers or polish.
- Do not place furniture under direct sunlight.
- Do not place furniture near heating or cooling vents.
- Do not write on furniture without a padded barrier to protect the surface.
- Do not place furniture outside . For indoor use only.
- Stains may be removed with mild soap solution and damp cloth.
- Children should not climb or jump on the furniture.
- Dust and pick-up spills using a clean, non-colored, lint-free cloth.

King Bed

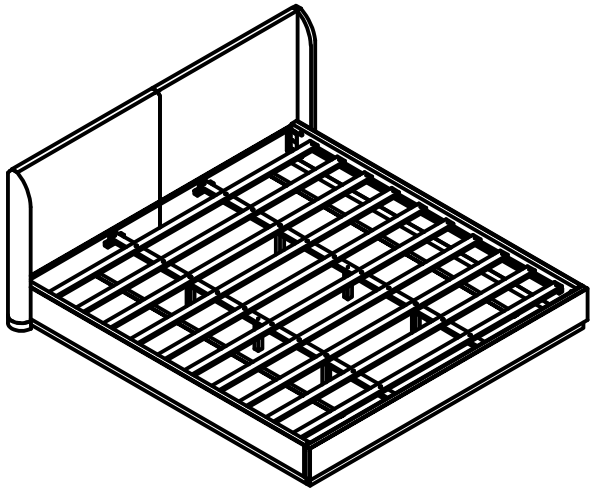



WARNING

STRANGULATION HAZARD.

NEVER place bed near windows where cords from blinds or drapes may strangle a child.
NEVER suspend strings over bed.
NEVER place items with a string,cord,or ribbon, such as hood strings or pacifier cords, around a child's neck. These items may catch on bed parts.
ALWAYS follow assembly instructions.

WARNING!

Not intended for children under the age of six.INFANTS HAVE DIED FROM BECOMING ENTRAPPED IN BEDS. Openings in and between bed parts can entrap the neck and head of a small child. NEVER use bed for child under the age of six.

The mattress must be appropriately sized for the bed. If the mattress is undersized, dangerous gaps can exist and a person can become entrapped or entangled in the frame and suffocate.

NOTE: This Bed is NOT a TOY.
Keep your child/children at bay during the assembley process.

The BED is HEAVY.
To prevent injury to yourself or damage to the product a mininium of two adults are required whenever moving or lifting it.

Parts List

Label	Picture	Description	QTY
1A	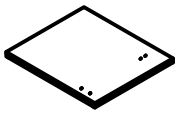	Left Headboard	1
1B	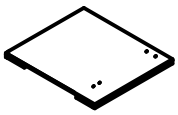	Right Headboard	1
2A	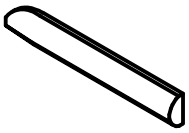	Left Headboard Side	1
2B	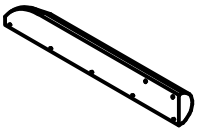	Right Headboard Side	1
3	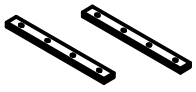	Crossbar	2

Parts List

4		Bed Legs	2
5A	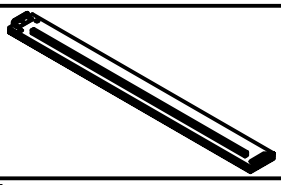	Left Side Rails	1
5B	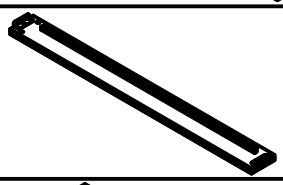	Right Side Rails	1
6	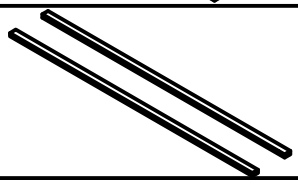	Foot crossbar	2
7	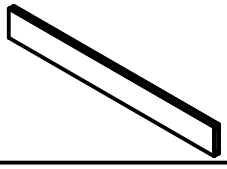	Footboard	1
8	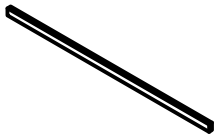	Foot crossbar	1
9		Wooden Bar	4
10	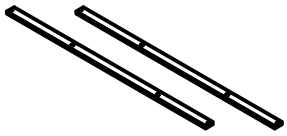	Slats	2
11	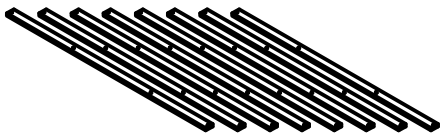	Slats	8
12	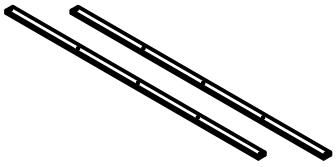	Slat Support Bar	2
13	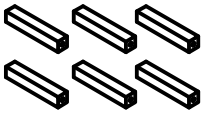	Legs Support	6

Hardware

Label	Picture	Description	QTY
A		Bolt (Ø1/4"x35mm)	28(+1)
B		Screws (M4 x 60 mm)	8(+1)
C	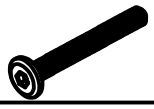	Bolt (Ø1/4"x60 mm)	12(+1)
D		Screws (M4 x 70 mm)	10(+1)
E		Bolt (Ø1/4"x50 mm)	14(+1)
F		Screws (M4 x 30 mm)	40(+1)
G		Allen Wrench	1(+1)
H		Washer	8(+1)
I	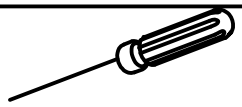	Screwdriver (Not provided)	1

Assembly Preparation

Before Begining Assembly:

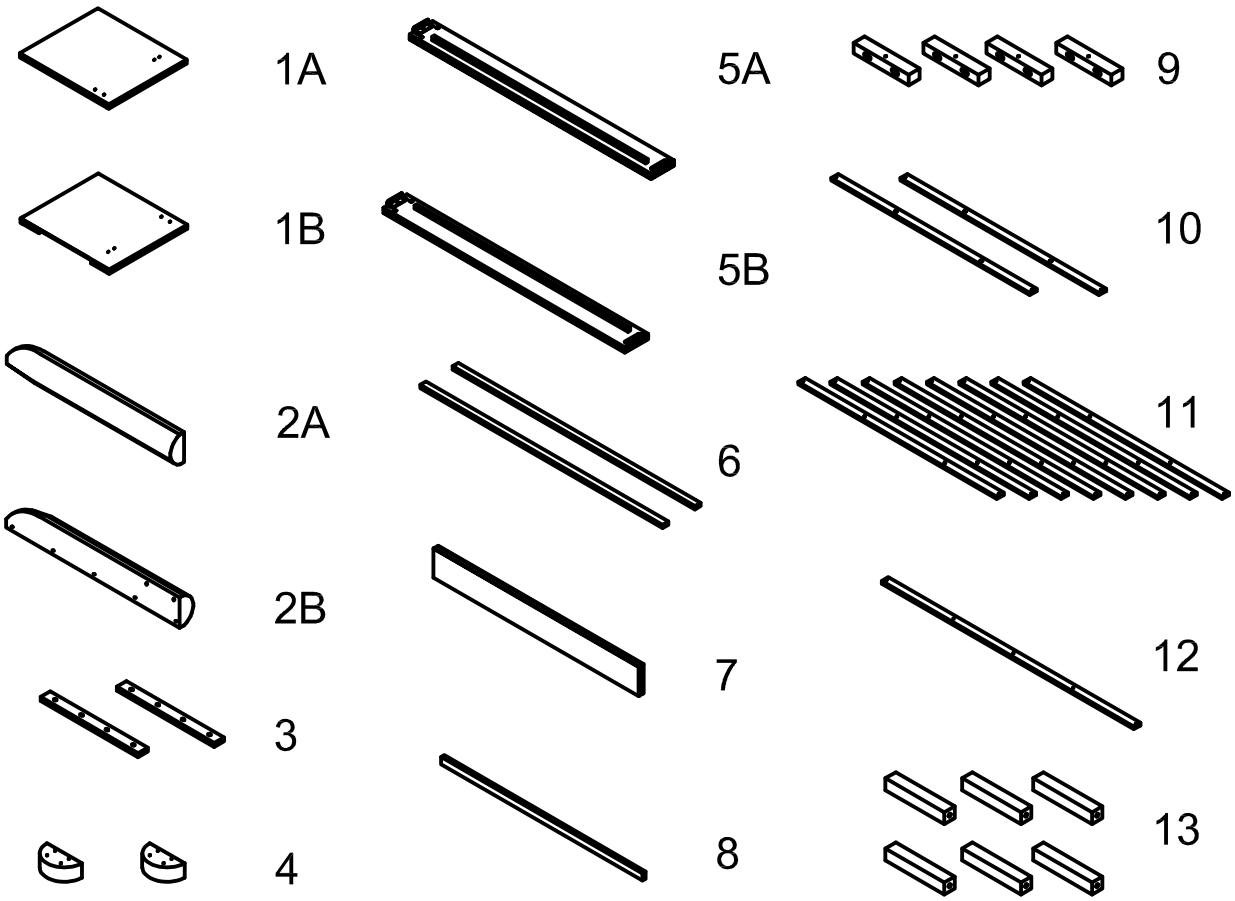

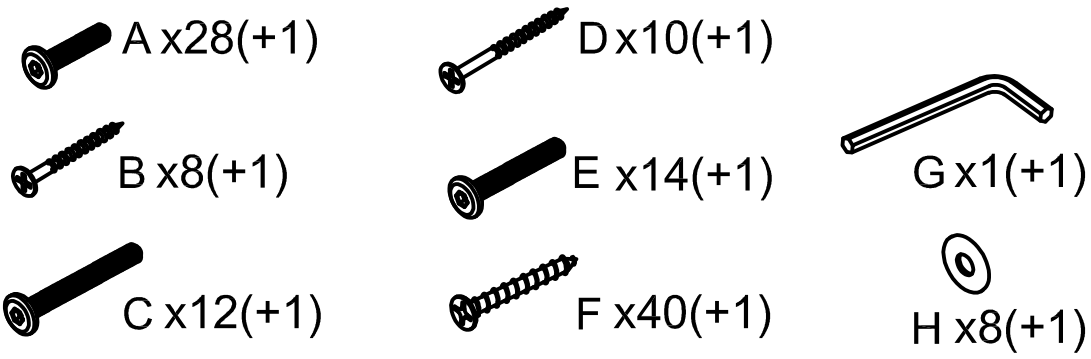

- Read instruction, cover to cover.
- Have 2 adults on hand for assembly.
- Do not assemble on flooring or carpet.
- Assemble on a clean non-marring surface (packing foam).
- Save all packaging until finished.

Assembly Steps

Overview

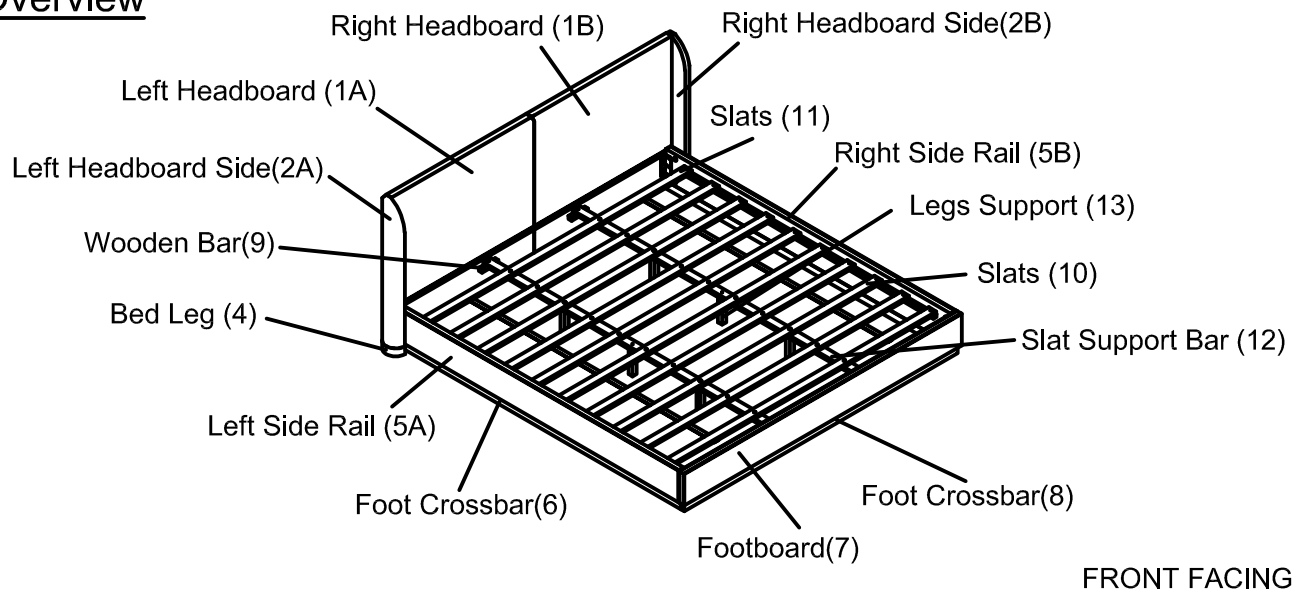

FRONT FACING

This Bed has multiple parts and may require up to 30 minutes to assemble. To give you an overview of the Bed parts, the above picture is provided to help you put the various parts into perspective. Please read through the instructions below to familiarise yourself with the parts and steps before assembly.

Step 1

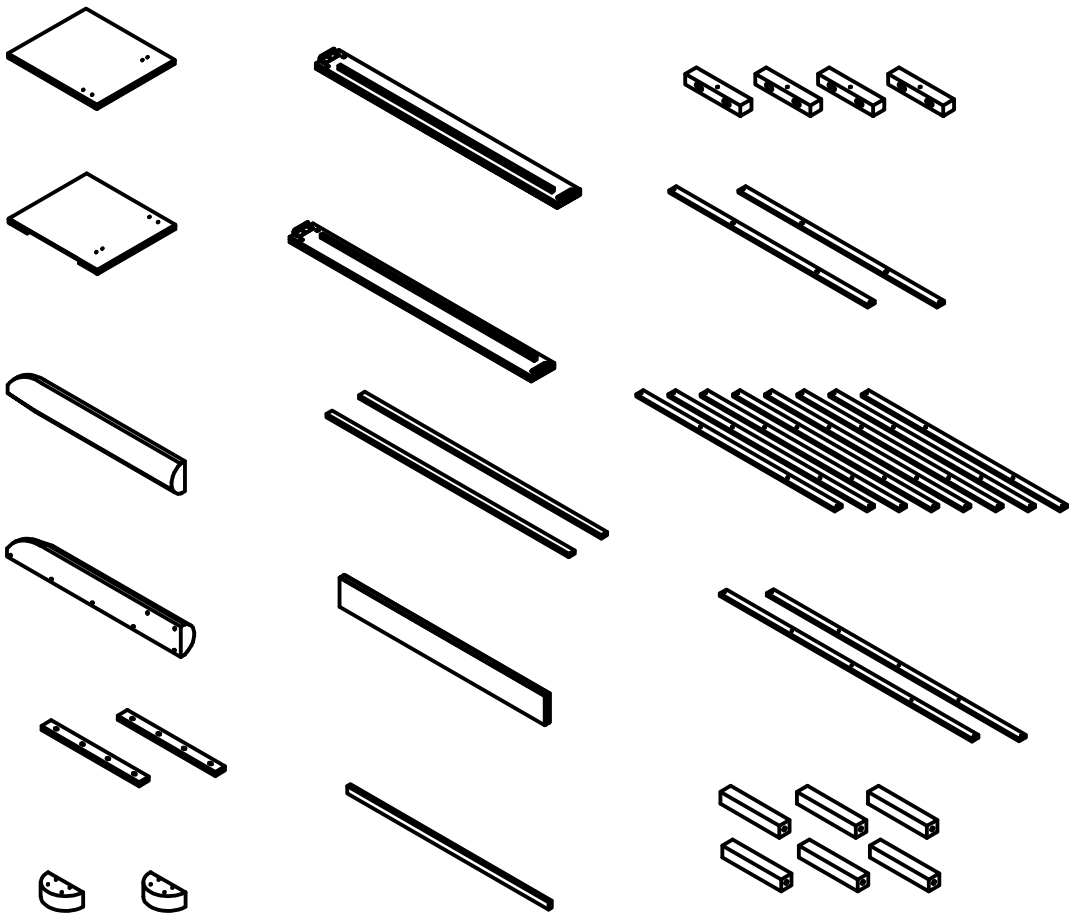

Unpack and place all parts on a clean,non-marring surface.

Step 2

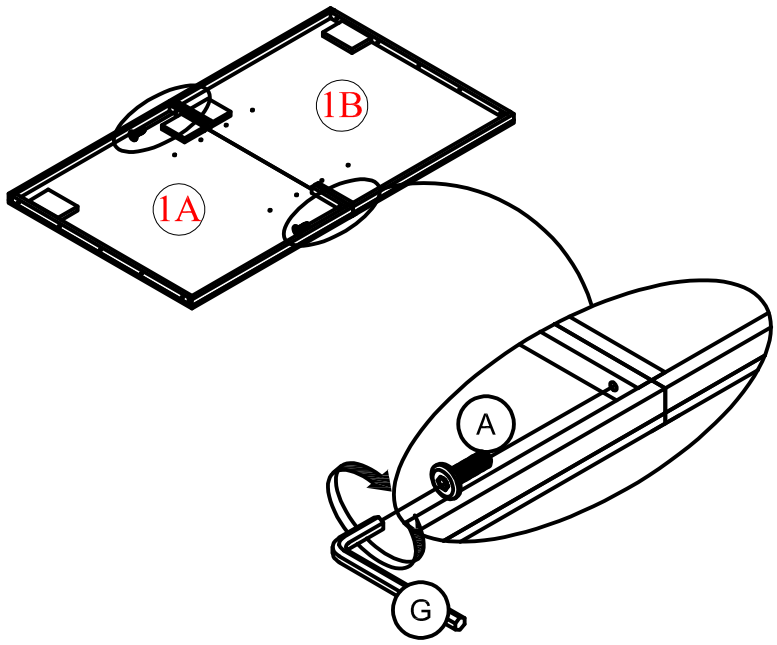

Align the Mounting Position of Left Headboard (1A) into the Right Headboard (1B) as shown above. Affix by using 2 Bolts (A) with Allen Wrench (G).

Step 3

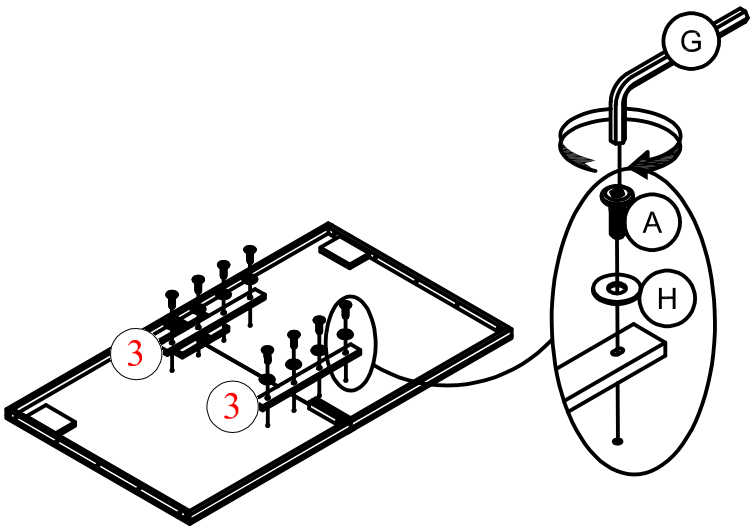

Connect the Crossbar (3) to the Headboard by using 8 Bolts (A), 8 Washer (H) with Allen Wrench (G).

Step 4

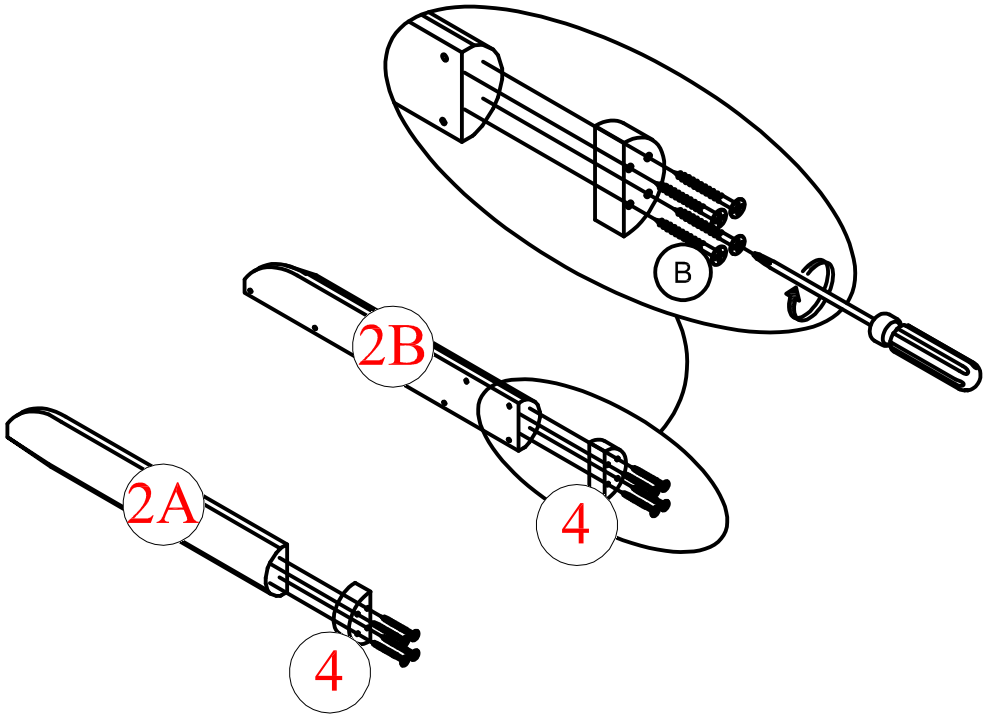

Fix the Bed Legs (4) to the Left / Right Headboard Side (2A) / (2B) by using 8 Screws (B) and a Screwdriver (Not Provided).

Step 5

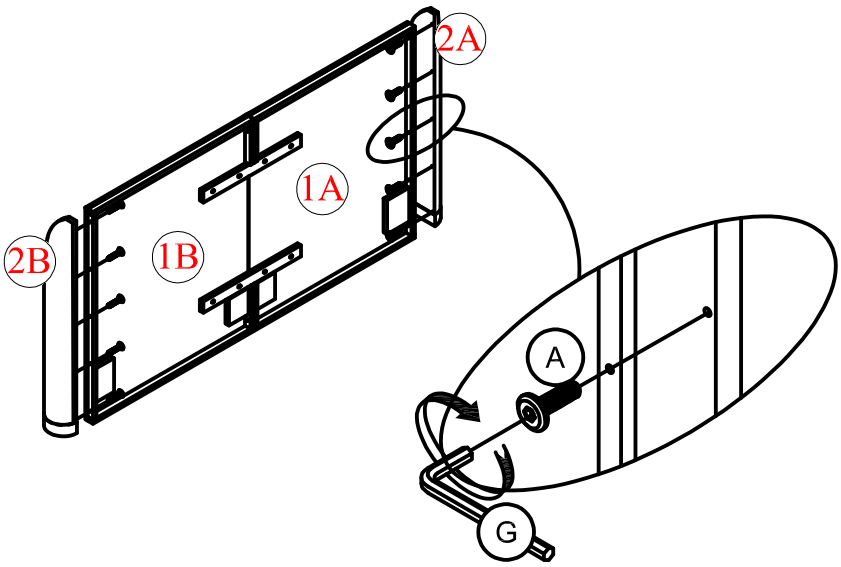

Connect the Headboard to the Left / Right Headboard Side (2A) / (2B) by using 10 Bolts (A) with Allen Wrench (G).

Step 6

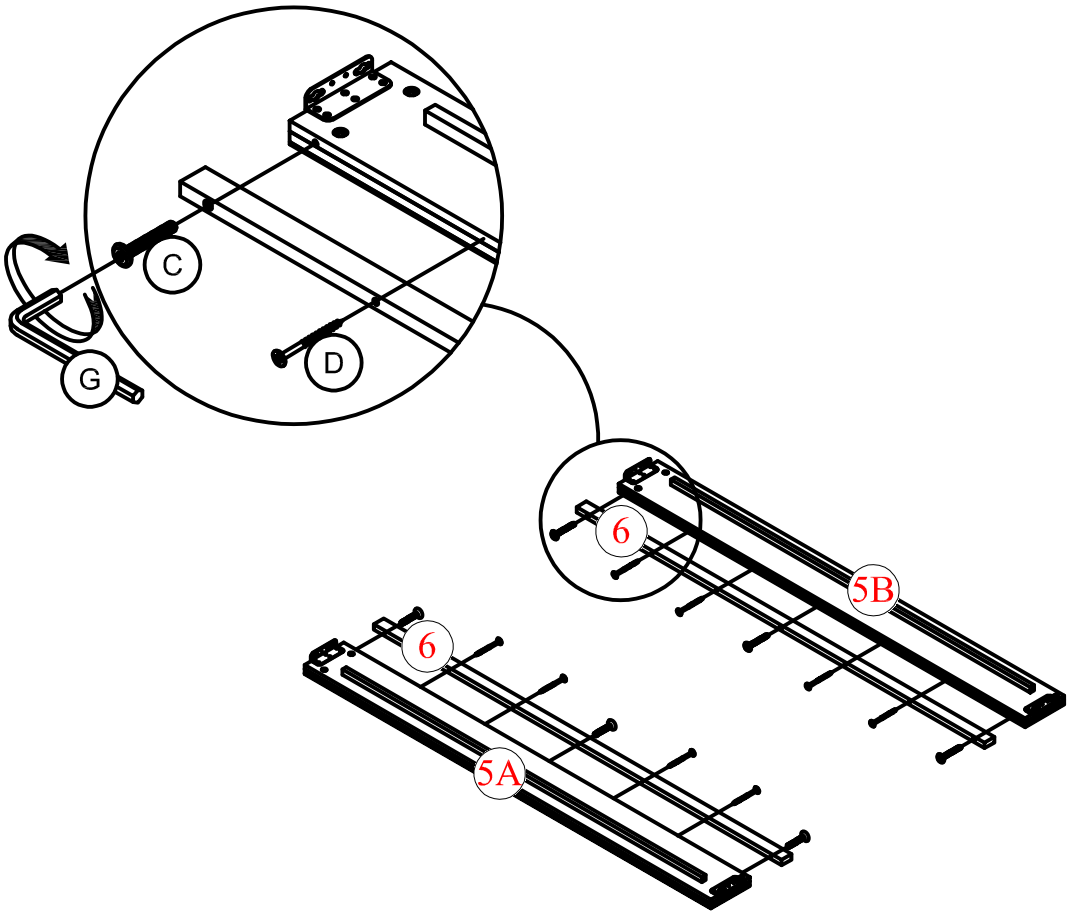

Align the Mounting Position on the Foot Cross Bar (6) to the Left / Right Side Rail (5A) / (5B). Attach the Foot Cross Bar (6) to the Left / Right Side Rail (5A) / (5B) by using 6 Bolts (C), 8 Screws (D) with Allen Wrench (G) and a Screwdriver (Not Provided).

Step 7

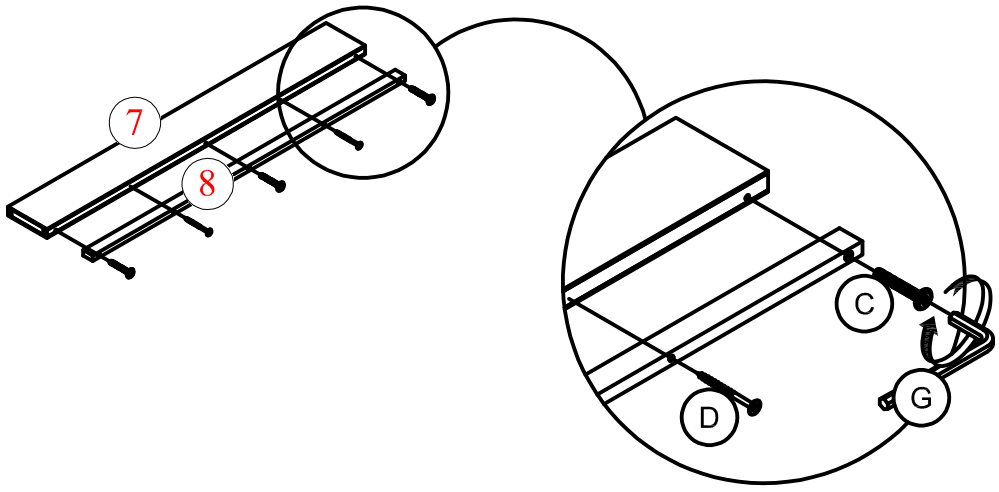

Align the Mounting Position on the Foot Cross Bar (8) to the Footboard (7). Attach the Foot Cross Bar (8) to the Footboard (7) by using 3 Bolts (C), 2 Screws (D) with Allen Wrench (G) and a Screwdriver (Not Provided).

Step 8

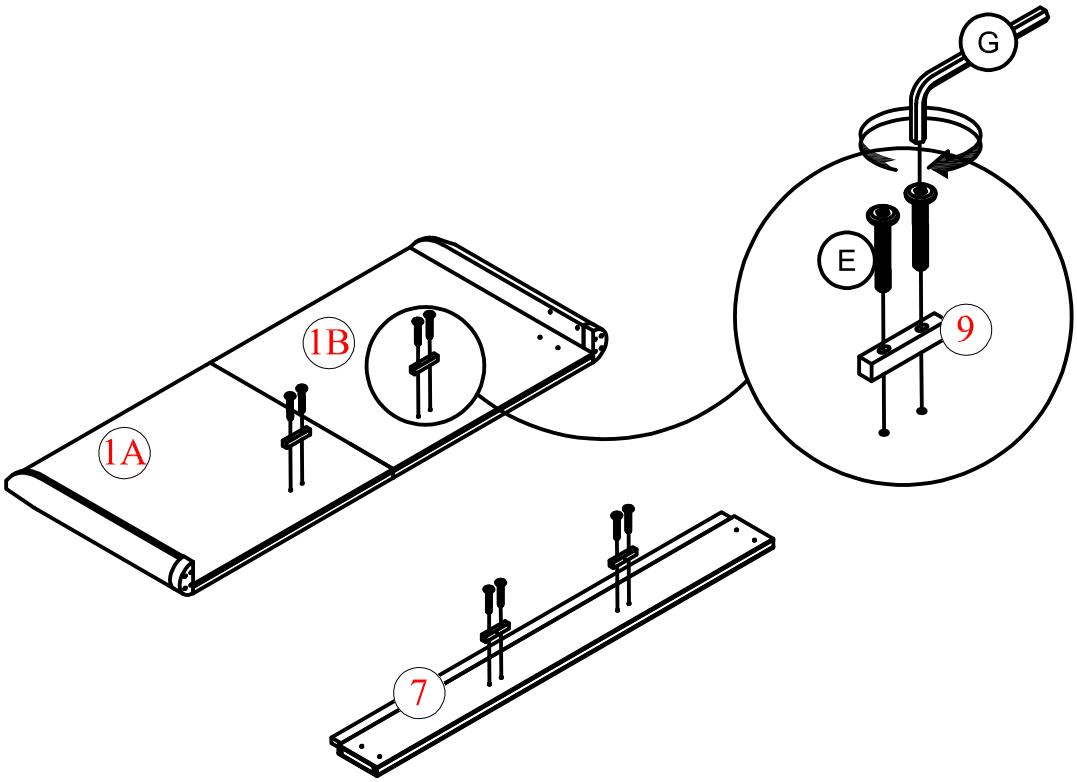

Attach the Wooden Bar (9) to the Headboard and the Footboard by using 8 Bolts (E) with Allen Wrench (G).

Step 9

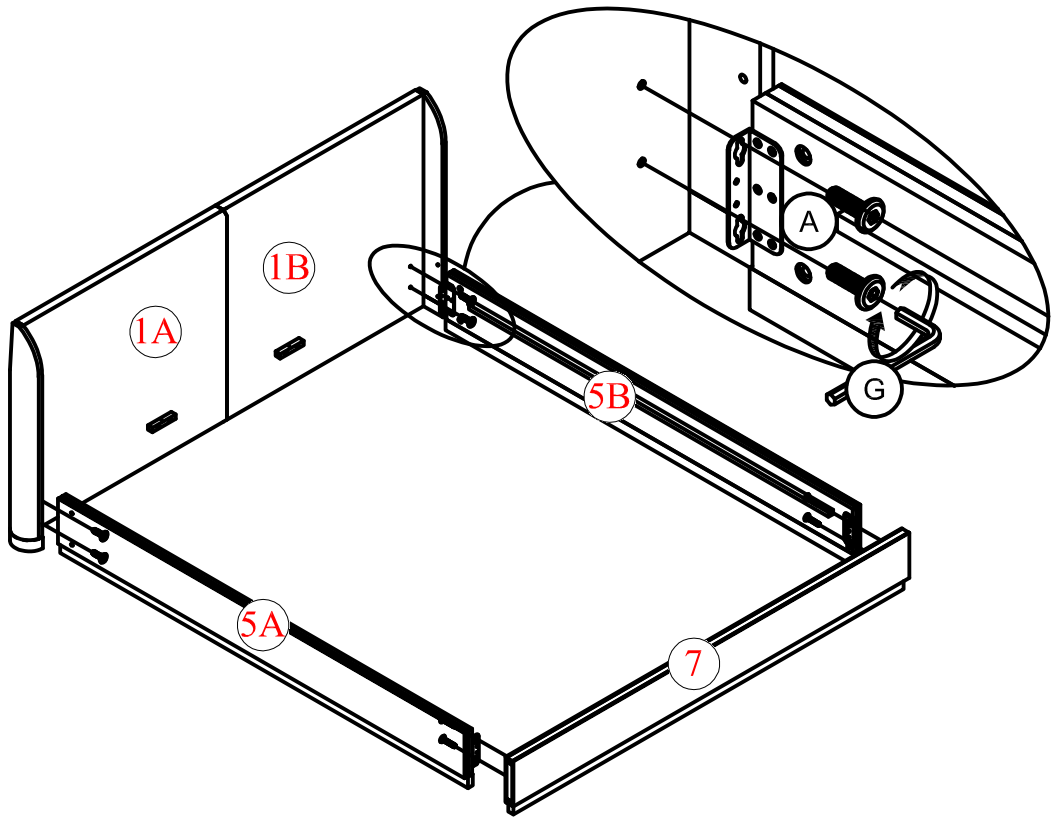

With the help of your partner, stand the completed the Footboard (5) and Headboard from Step 8 as shown in the picture above. Affix by using 8 Bolts (A) with Allen Wrench (G).

Step 10

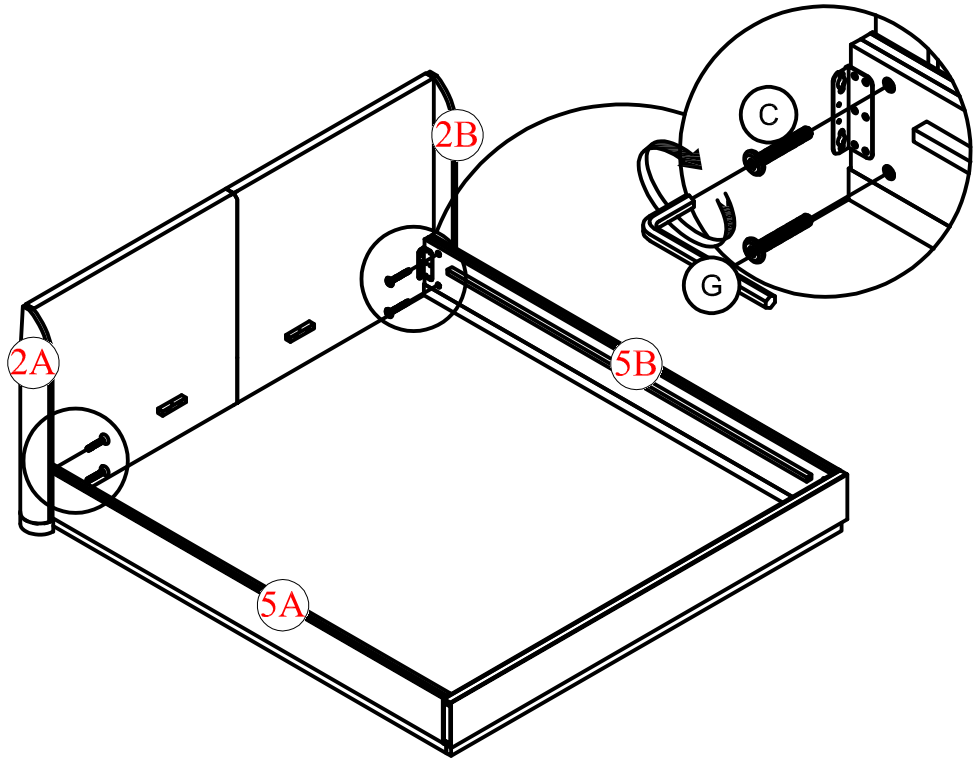

Attach the Left/Right Side Rail (5A)/(5B) to the Left/Right Headboard Side (2A)/(2B) by using using 4 Bolts (C) with Allen Wrench (G).

Step 11

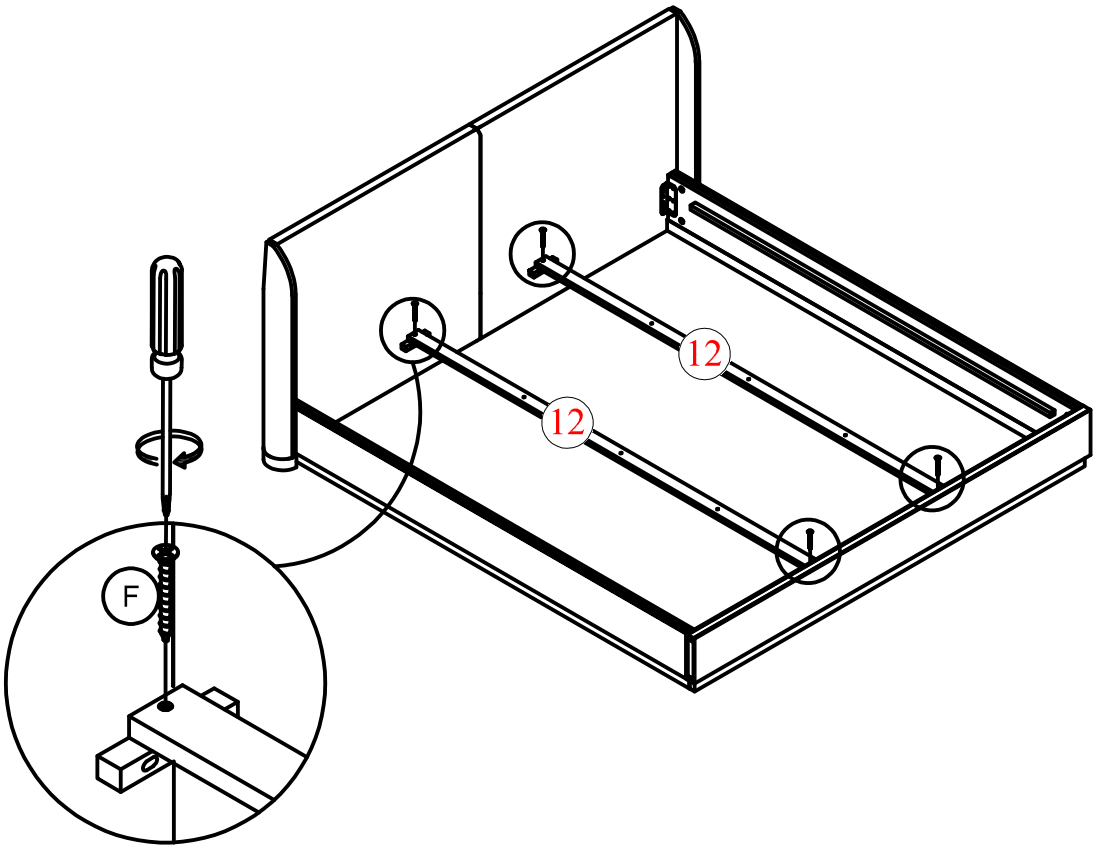

Fix the Slats Support Bar (12) to the Wooden Bar (9) by using 4 Screws (F) and a Screwdriver (Not Provided).

Step 12

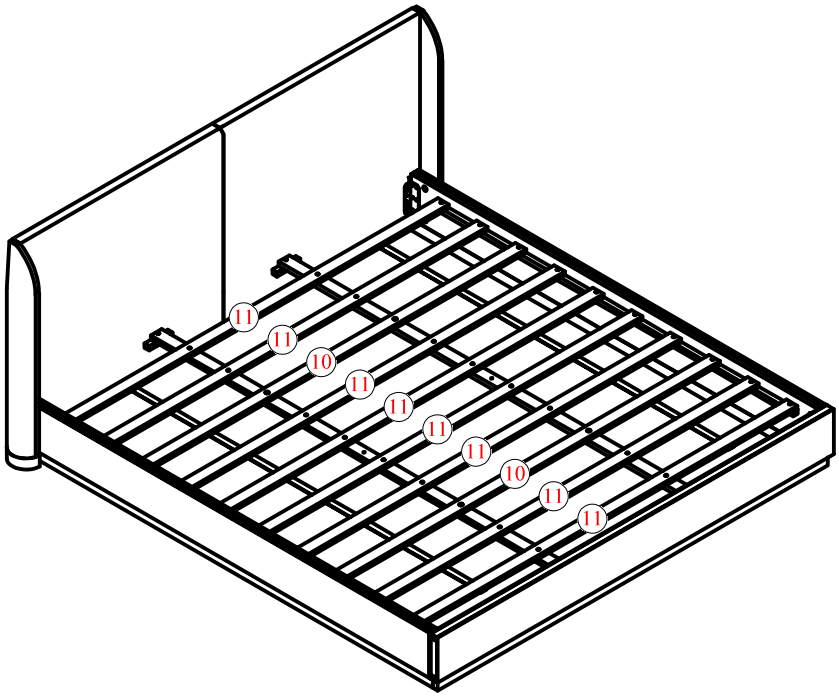

Spread out 12 bed slats as shown above.

Step 13

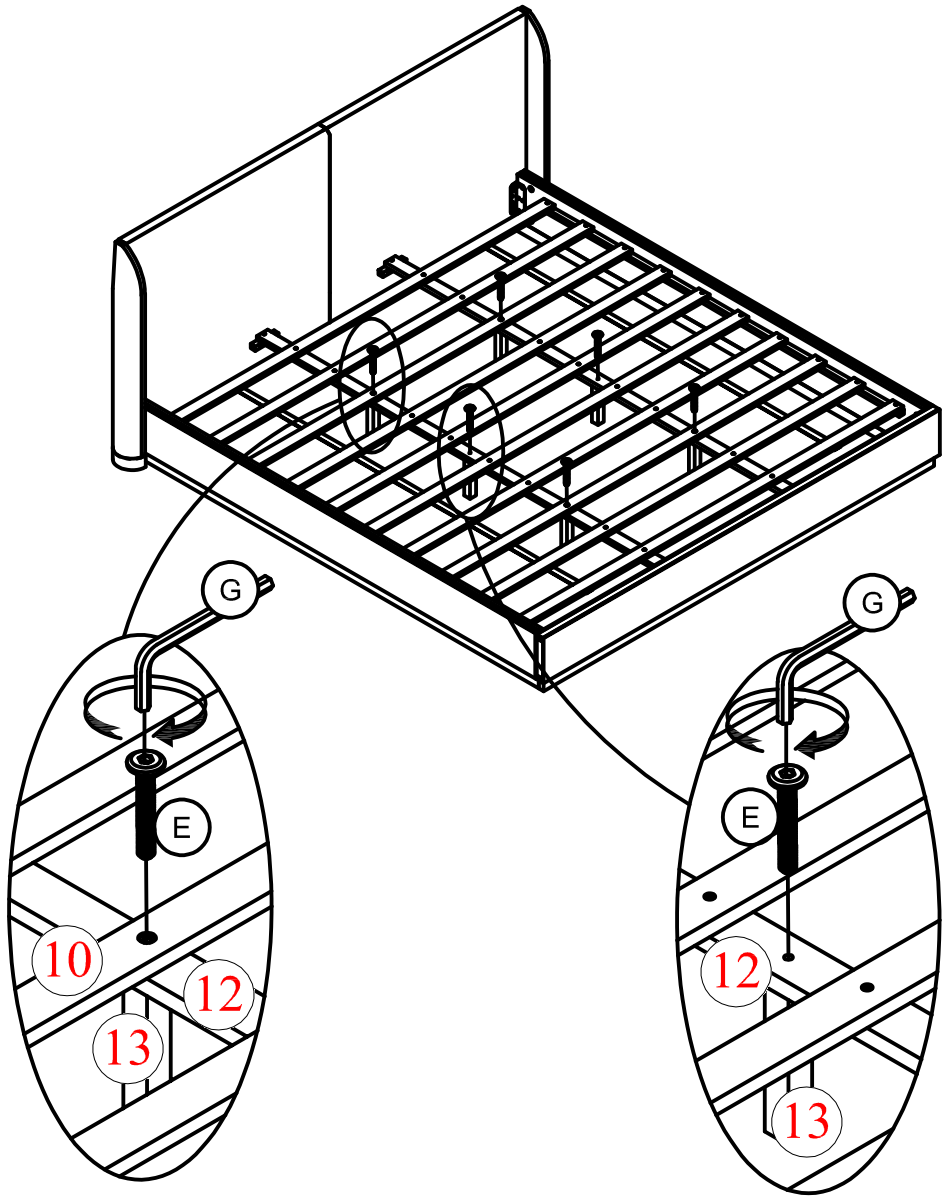

Align the Mounting Position on the Slat Support Bar (12) to the Support Leg (13) and the Slat (10). Attach the Slat (10) and the Slat Support Bar (12) to the Support Leg (13) and by using 6 Bolts (E) with Allen Wrench (G).

DO NOT FULLY TIGHTHEN BOLTS IN ONE GO, TIGHTEN THE BOLTS AFTER 6 PCS Support Leg (13) ARE ATTACHED.

Step 14

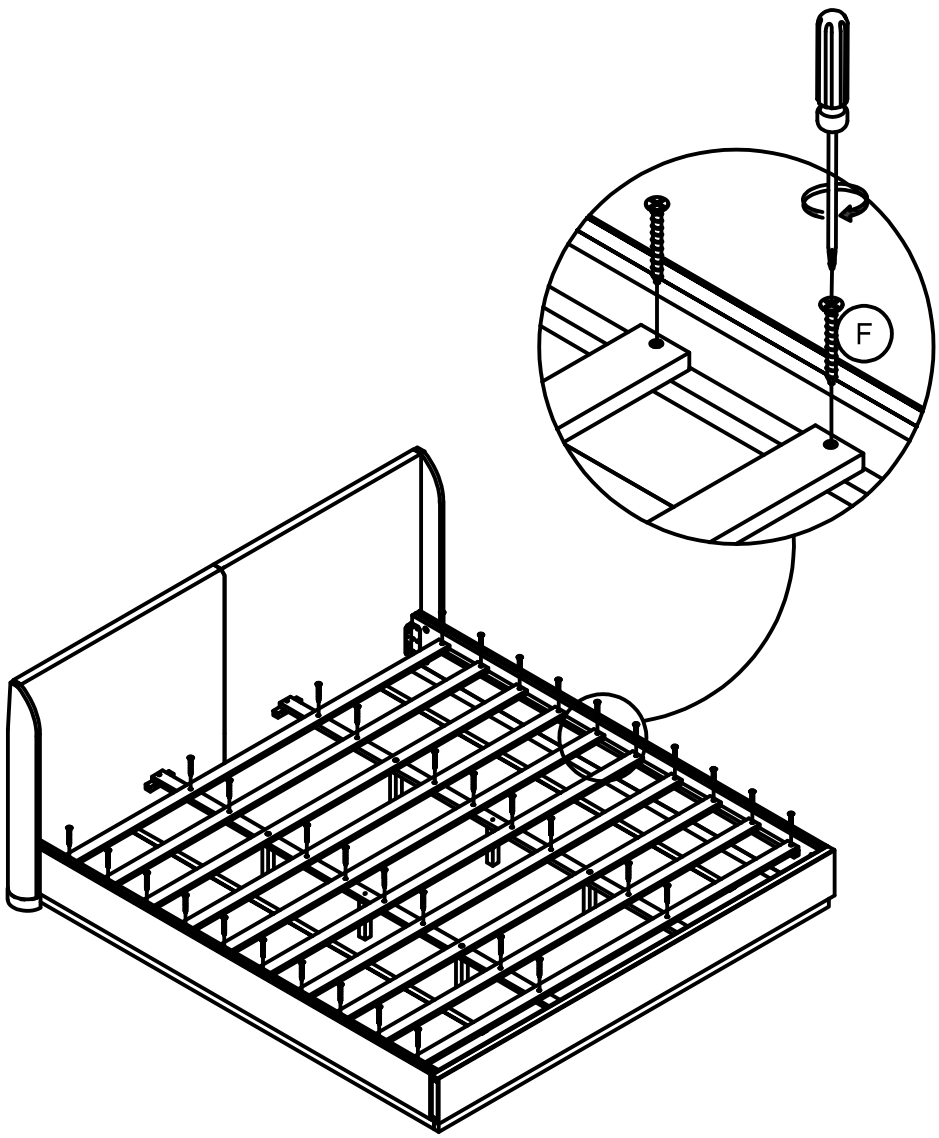

Fix the Slats (10)/(11) to the Left / Right Side Rails (5A)/(5B) and the Slats Support Bar (12) by using 36 Screws (F) and a Screwdriver (Not Provided).

Step 15

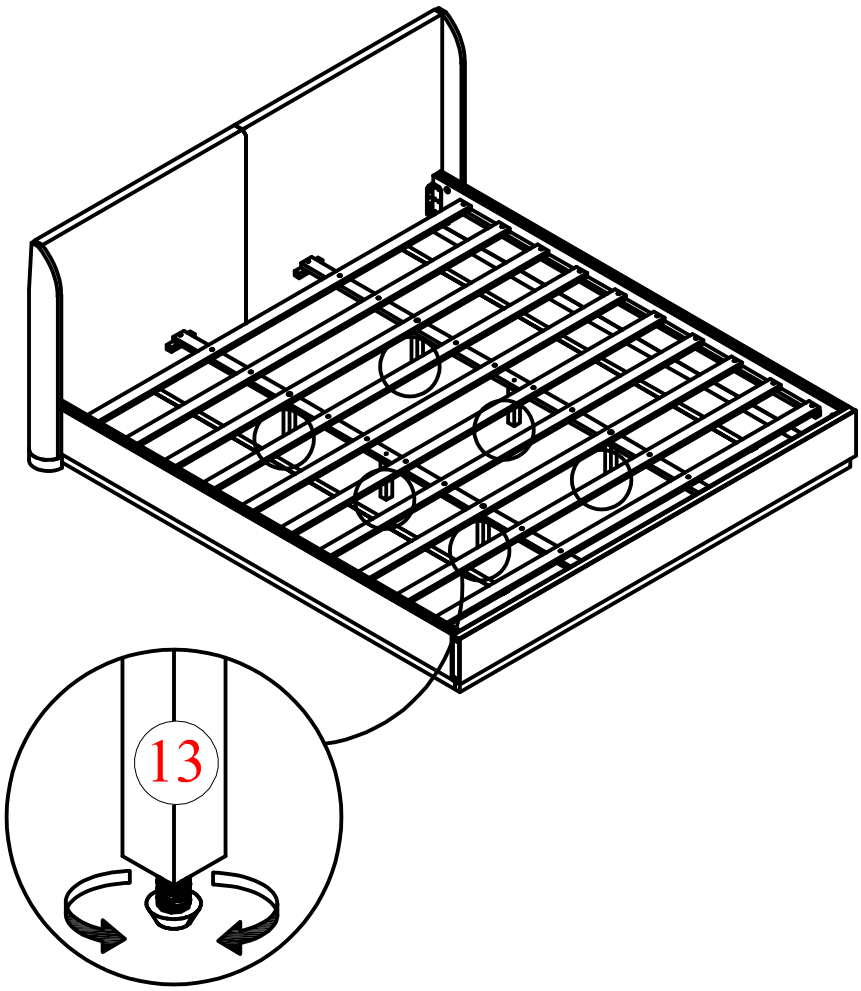

Rotate counterclockwise to increase the length of Floor Leveler, and raise that corner.
Rotate clockwise to lower that corner.

Step 16

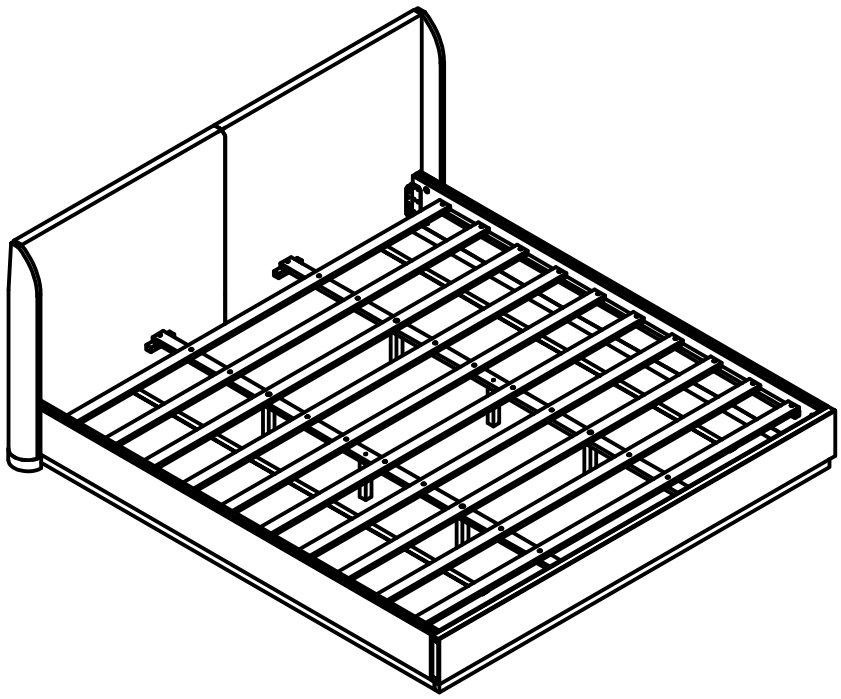

Place the Bed on a LEVEL SURFACE.
Inspect it and make sure all parts are adequately connected.

Don't push too hard, shake on the bed.
This would help to align all the parts at all the joint areas.

CAUTION 1: When tightening these screws, tighten sequentially.
DO NOT tighten any screw fully and then towards the next one.
This would cause the frame to warp.
If there is still wobbles, loosen the screws and execute this same process.DO NOT tighten any screw fully and then towards the next one.
WARNING!! IF BED IS NOT STABLE , IT COULD LEAD TO DAMAGING THE PRODUCT.
Ensure all screws are fully locked into position.
The bed is ready to be used.
CAUTION 2: This bed can only be used on a flat, level surface.