D312
Shower Strainer Grill & Crown

Polished Brass With Screws

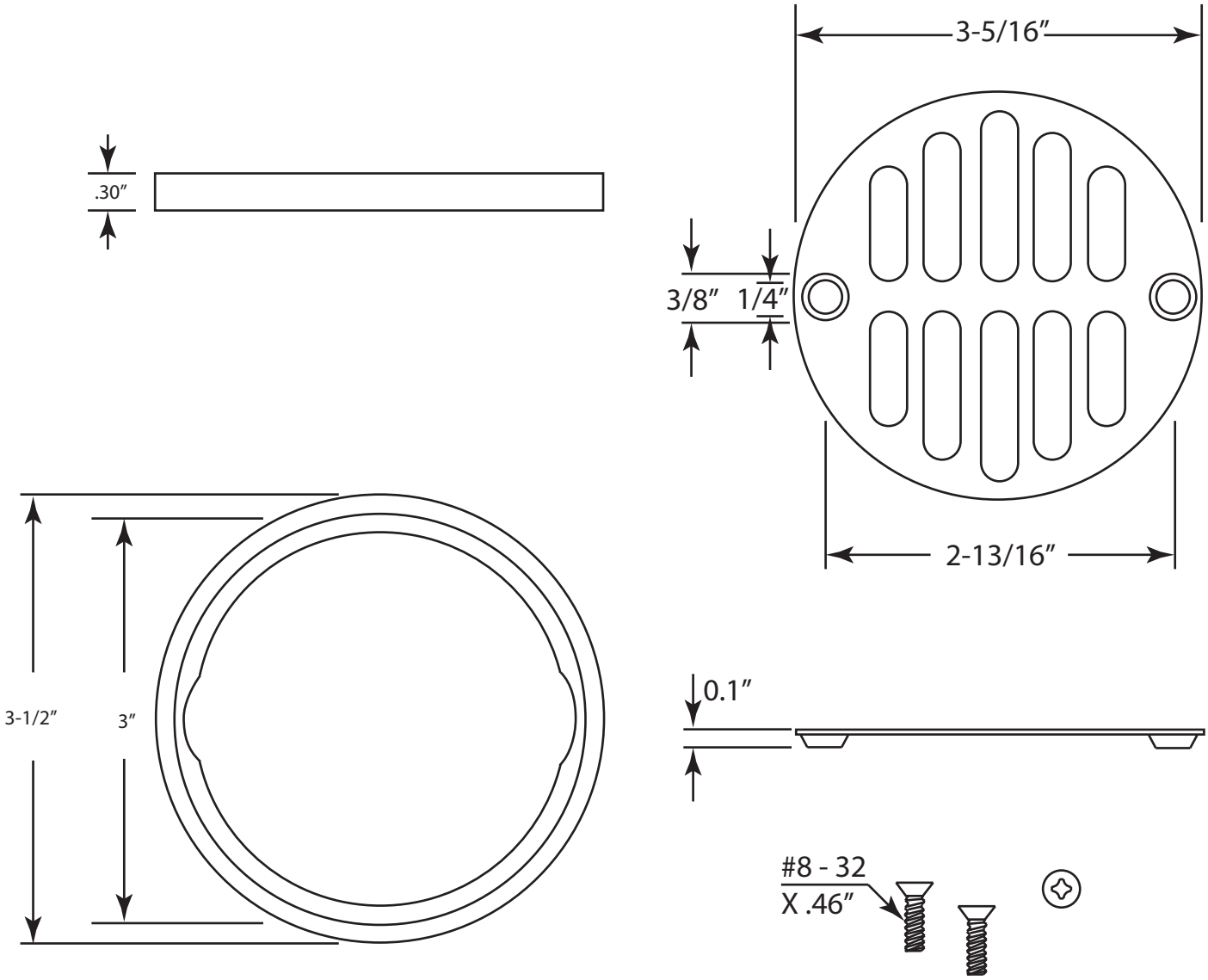

WESTBRASS
Fine Decorative Plumbing Since 1935

2429 East Olympic Blvd. Los Angeles, CA 90021
213-627-8441 • FAX 213-627-2844 • www.westbrass.com