INSTALLATION
Product Manual

Version: 390098US-01-26A-SH

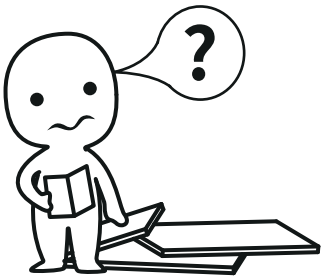

IMPORTANT INFORMATION!

please read the entire manual before starting to assemble and/or using this product.follow the manual thoroughly and keep it for further reference.

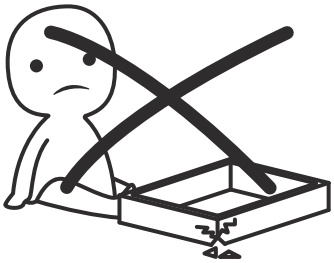

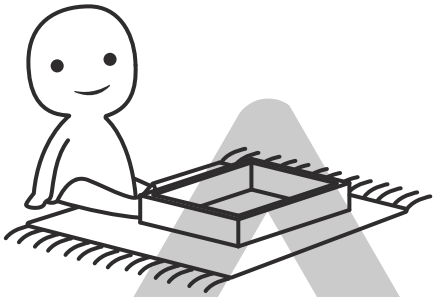

AVOID SCRATCHES!

In order to avoid scratching this furnuture should be assembled on a soft layer-could be a rug.

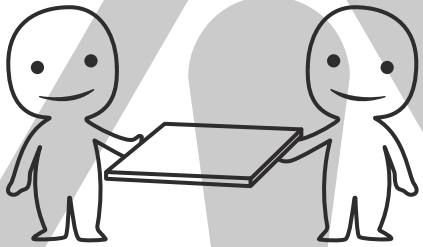

IMPROVE EFFICIENCY !

Try to find a partner to install with you, which can speed up the installation efficiency and shorten the time.

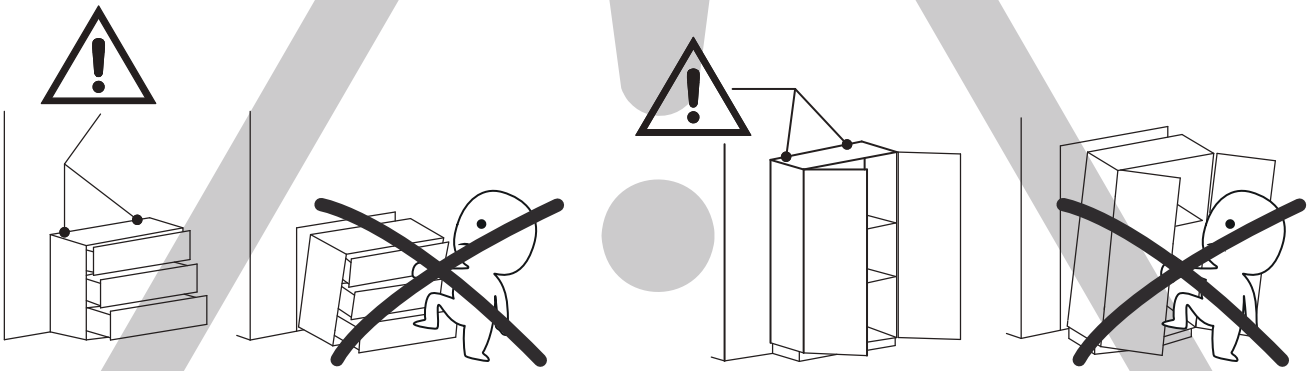

ANTI-TOPPLE WARNING !

Overturned furniture can cause serious or fatal crush injuries. To prevent tipping over, be sure to use the wall attachment, if not included with this product. Please purchase the wall attachment that fit your wall. If unsure, seek professional advice. Please read and follow each step of the instructions carefully.

IMPORTANT !

It is important that any product which is assembled using any kind of screw is re-tightened 2 weeks after assembly,and once every 3 months - in order to assure stability through-out the lifespan of the product.

For regular maintenance and cleaning of the product, for the frame, please use a rag dipped in neutral detergent to fully wipe it, and then dry it with a clean rag.For glass materials, wipe with a rag dampened with water glass cleaner, and then dry with a dry rag.

Do not use an electric screwdriver, and do not use too much force when installing, because the board is easy to break.

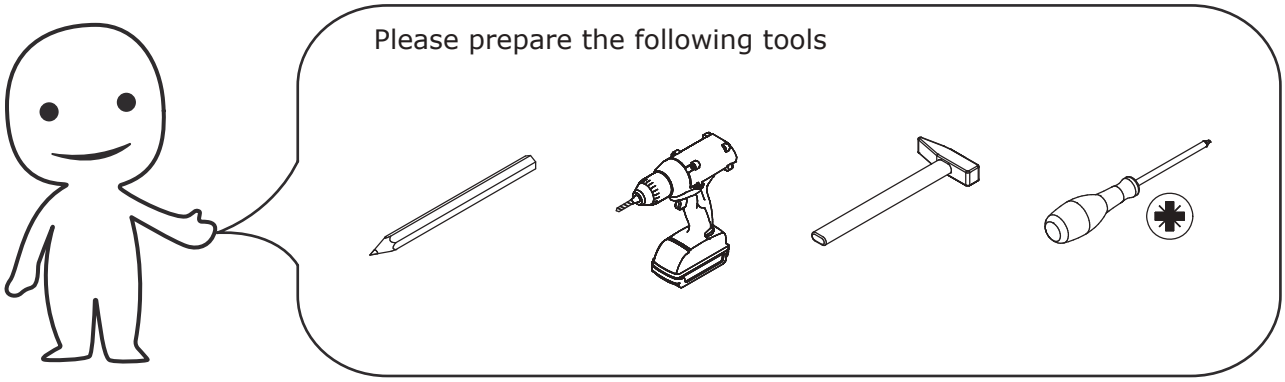

When installing, please carefully confirm whether each screw corresponds to the manual, accessories with similar shapes can be distinguished by size

A x 187	B x 187	C x 24	D x 322	E x 28
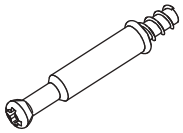 ∅6 x 35 mm	∅9.5 x 15 mm	∅3 x 14 mm	∅3.5 x 12 mm	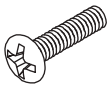 ∅4 x 18 mm

F x 22	G x 20	H x 18	J x 4	K x 11
∅4 x 14 mm		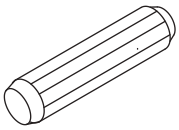 ∅6 x 30 mm	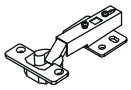	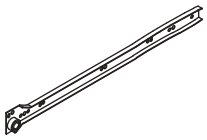

L x 11	M x 4	N x 8	P x 59	Q x 18
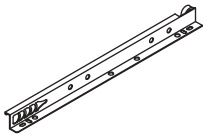	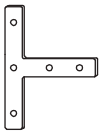	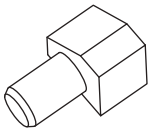	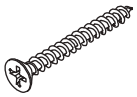 ∅3 x 30 mm	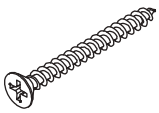 ∅3 x 40 mm

R x 24	S x 8	T x 25	U x 11	V x 4
	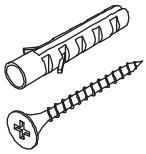 ∅3 x 30 mm	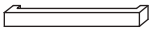	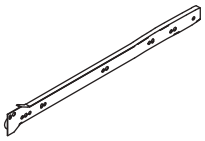	

Y x 8	Z x 11
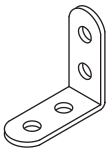	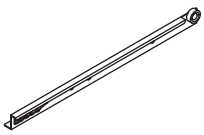

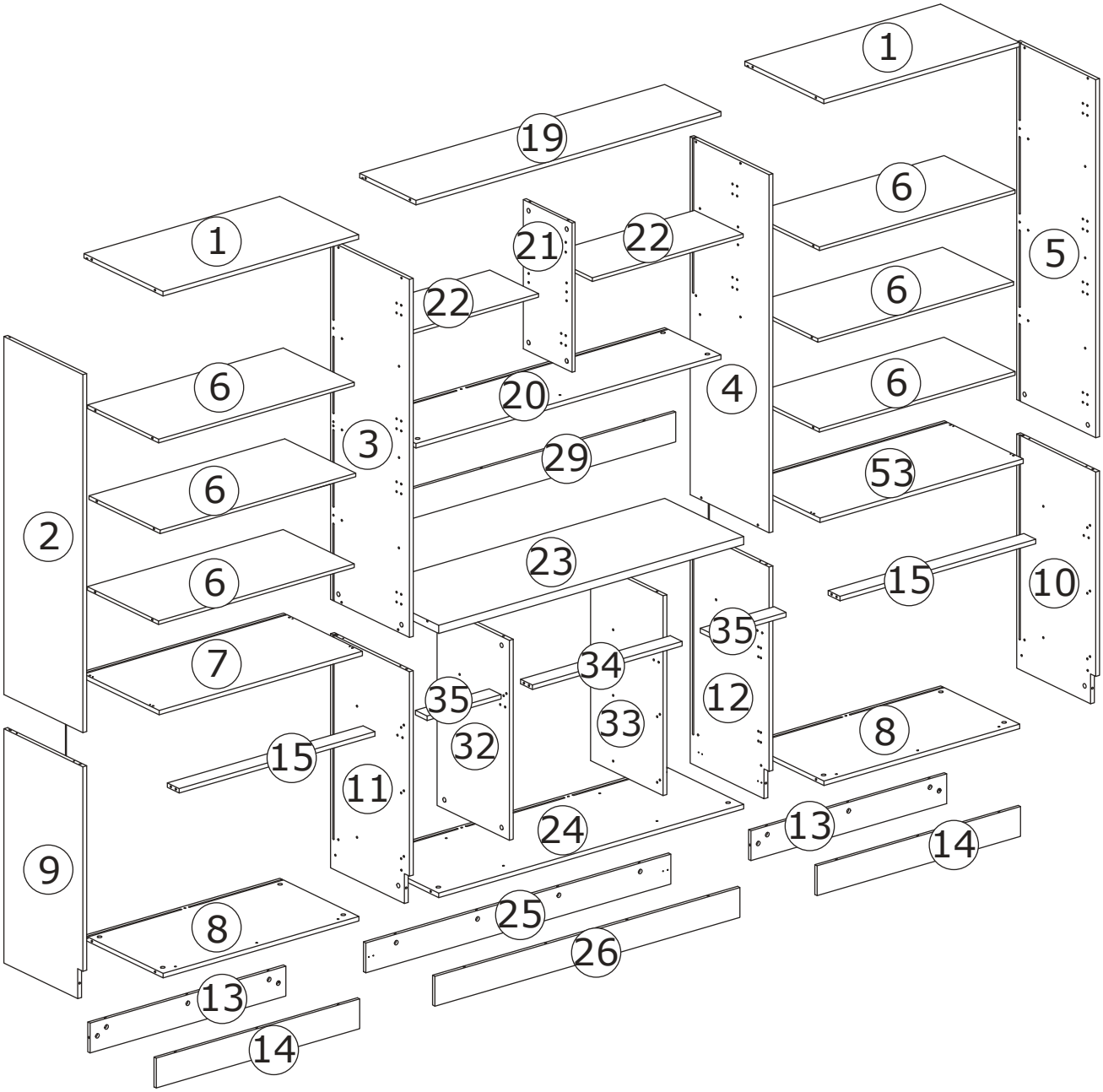

⚠WARNING

Children have died from furniture tipover.To reduce the risk of furniture tipover:

- ALWAYS install Anti-tip device provided.
- NEVER put a TV on this product.
- NEVER allow children to stand,climb or hang on drawers,doors,or shelves.
- NEVER open more than one drawer at a time.
- Place heaviest items in the lowest drawers.

This is a permanent label.
Do not remove!

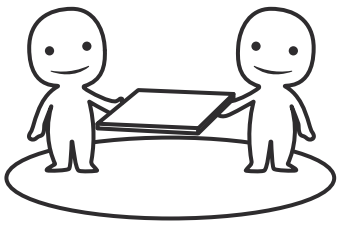

ASSEMBLED BY 2 ADULTS

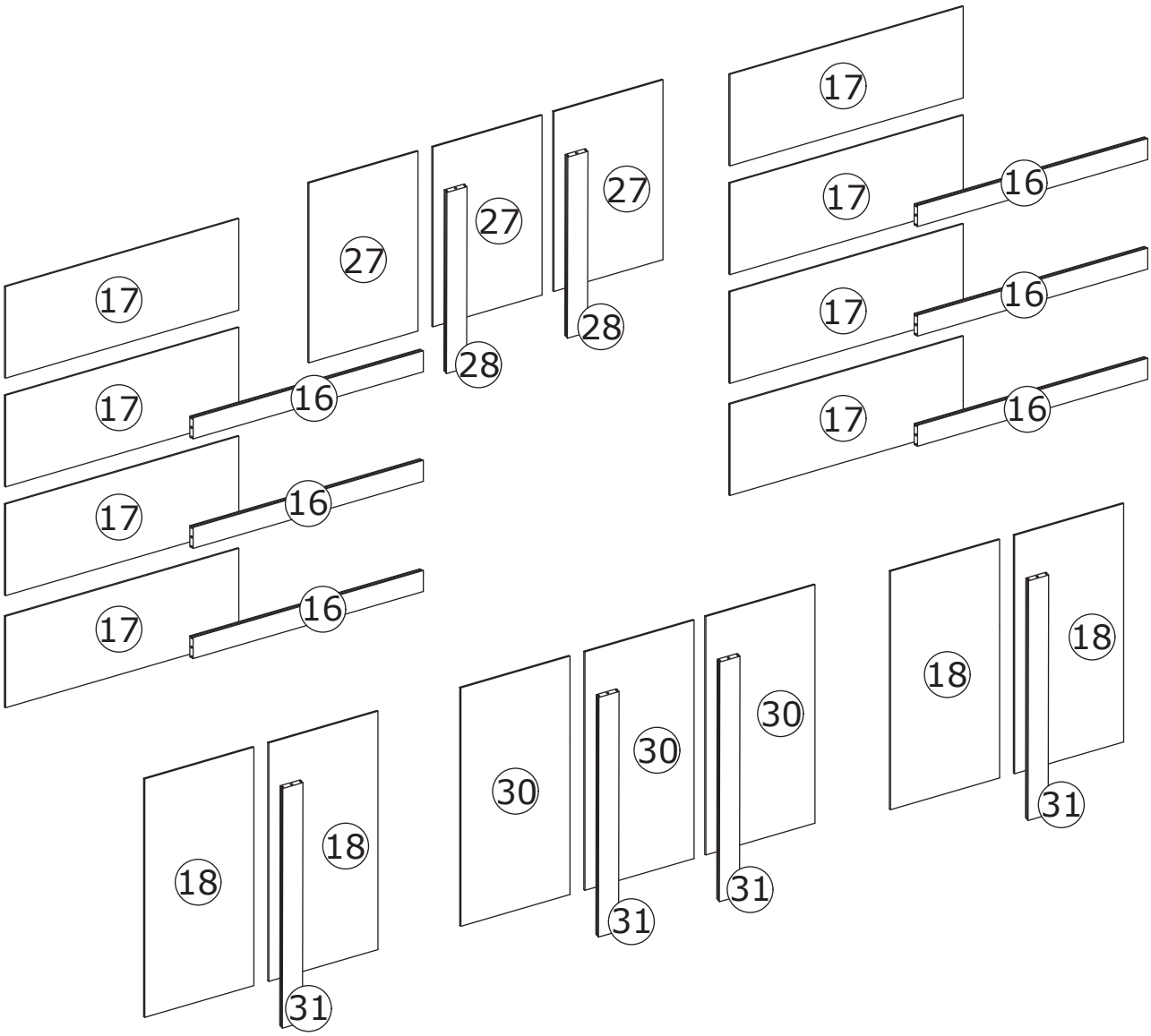
17
17
17
17
16
16
16
16
27
27
27
28
28
17
17
17
17
16
16
16
18
18
18
18
30
30
30
31
31
31
31

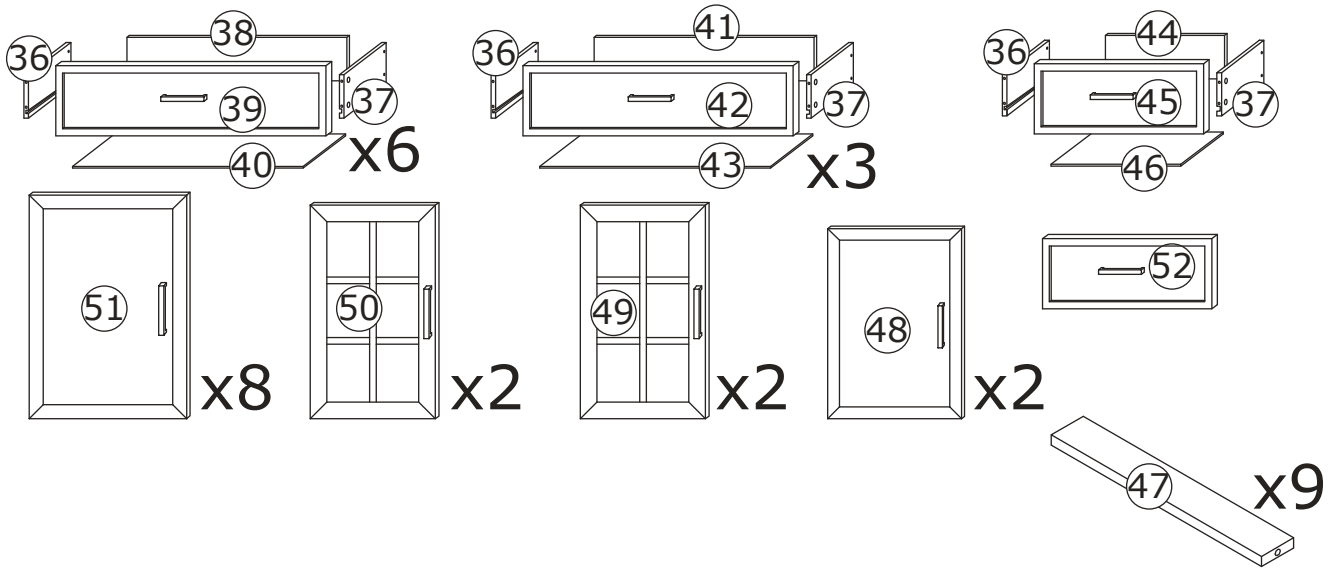
36
38
39
37
40
x6
36
41
42
37
43
x3
36
44
45
37
46
51
x8
50
x2
49
x2
48
x2
52
47
x9

1 x2 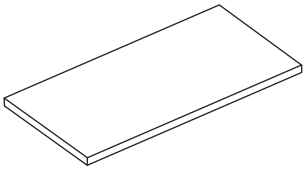	2 x1	3 x1 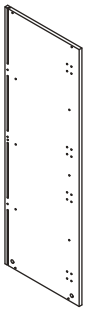	4 x1 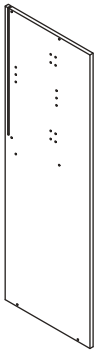
5 x1	6 x6 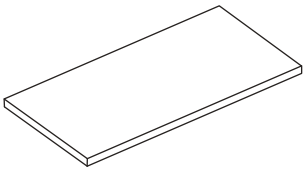	7 x1 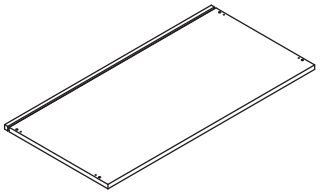	8 x2 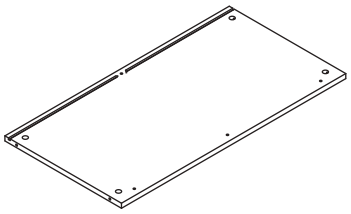
9 x1 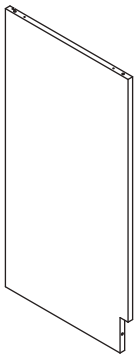	10 x1 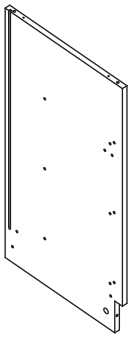	11 x1 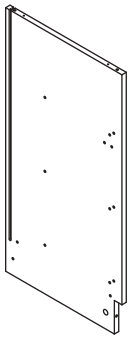	12 x1 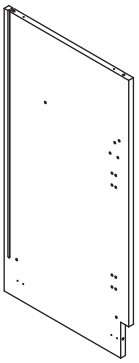
13 x2 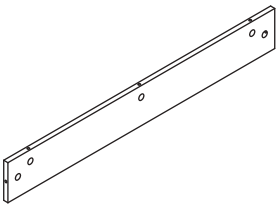	14 x2 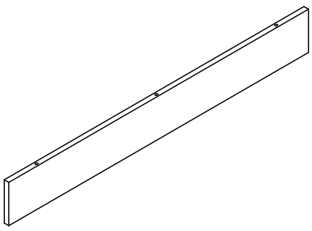	15 x2 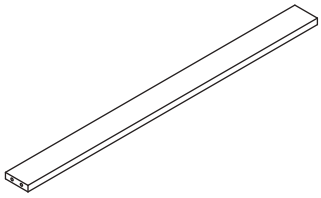	16 x6 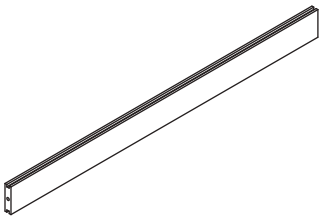
17 x8 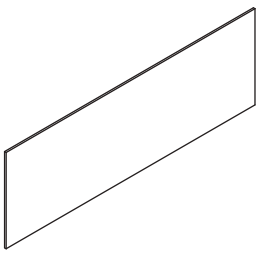	18 x4 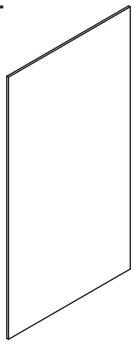	19 x1 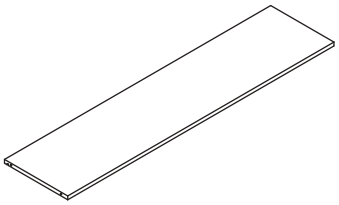	20 x1 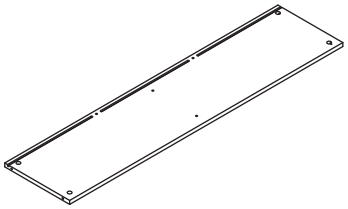

21 x1

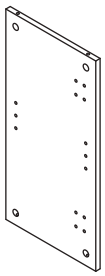

22 x2

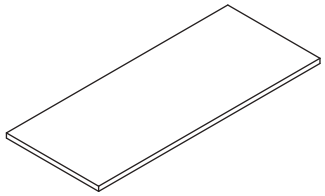

23 x1

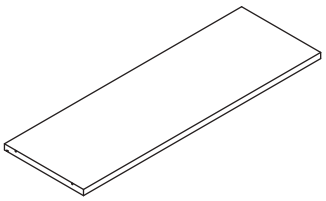

24 x1

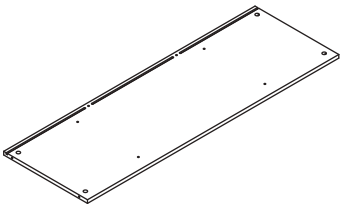

25 x1

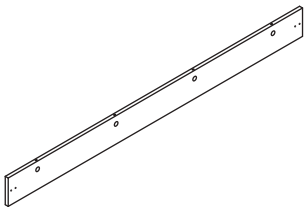

26 x1

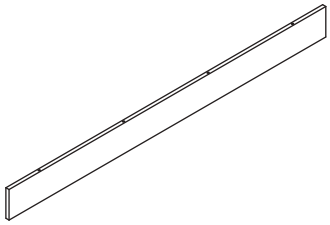

27 x3

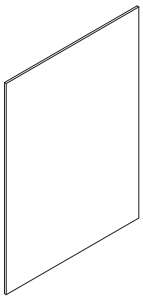

28 x2

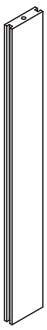

29 x1

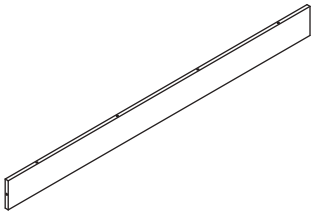

30 x3

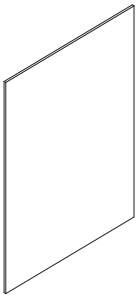

31 x4

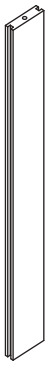

32 x1

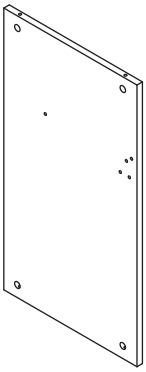

33 x1

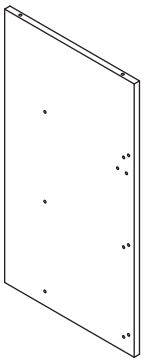

34 x1

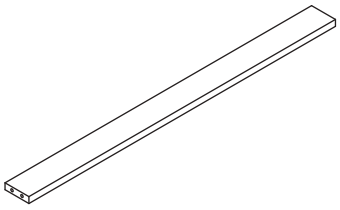

35 x2

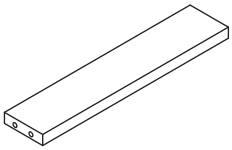

36 x11

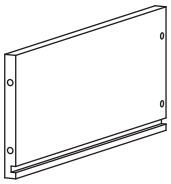

37 x11

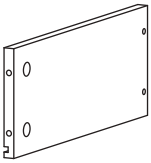

38 x6

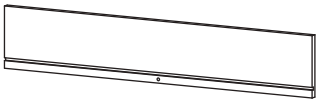

39 x6

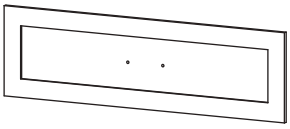

40 x6

41 x3

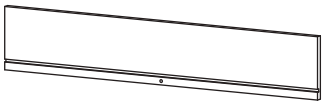

42 x3

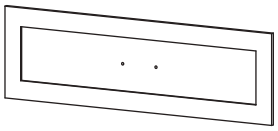

43 x3

44 x2

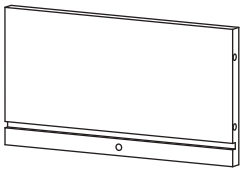

45 x1

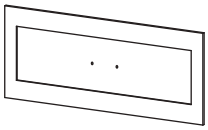

46 x2

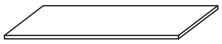

47 x9

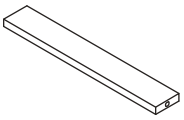

48 x2

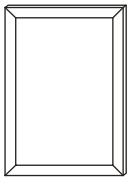

49 x2

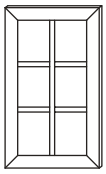

50 x2

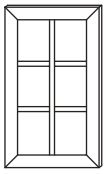

51 x8

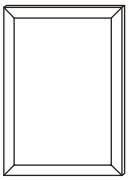

52 x1

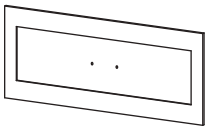

53 x1

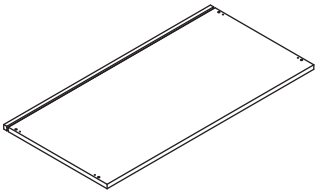

1

A x 2	D x 12	K x 3	U x 1	
∅6 x 35 mm	∅3.5 x 12 mm			

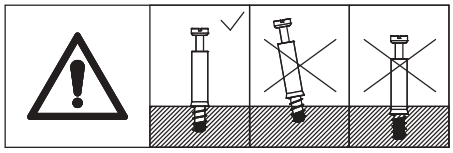

Attach slide (U) to plate 32 with screws (D), flip to the back and attach slide (K) to plate 32 with screws (D), and attach screws (A) to plate 32 as shown.

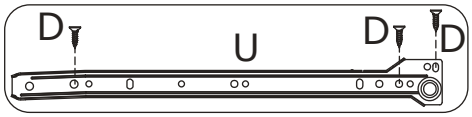

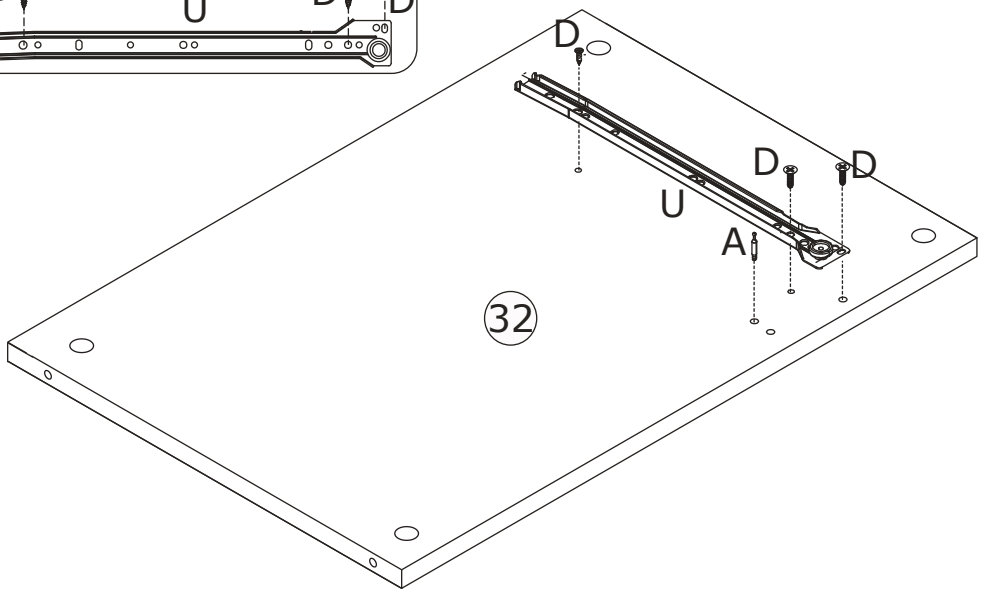

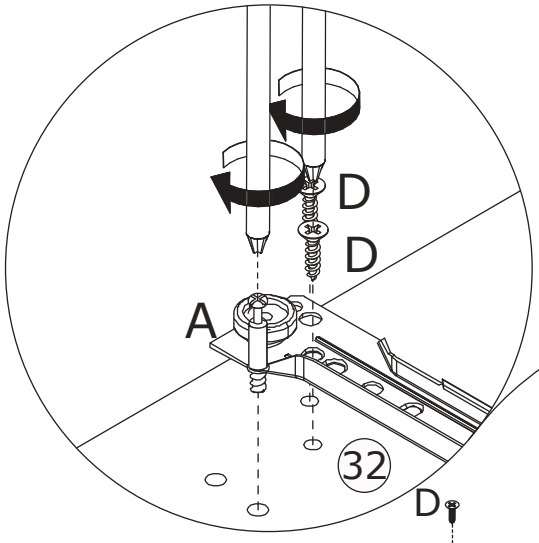

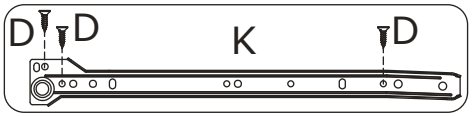

180°

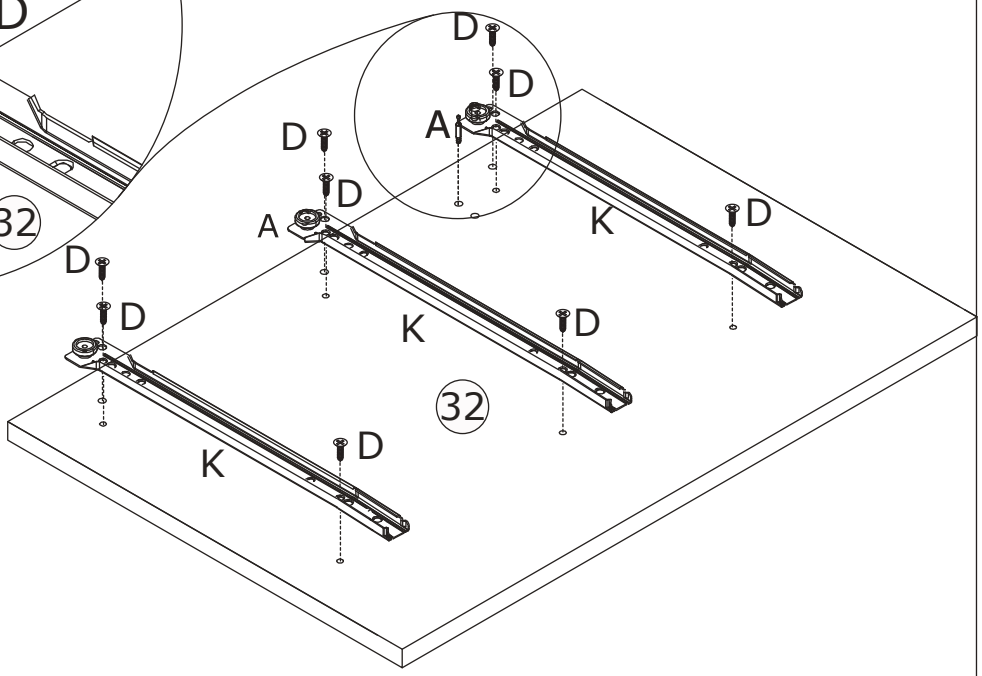

2

A x 2	D x 12	K x 1	U x 3	
∅6 x 35 mm	∅3.5 x 12 mm			

Attach slide (U) to plate 33 with screws (D), flip to the back and attach slide (K) to plate 33 with screws (D), and attach screws (A) to plate 33 as shown.

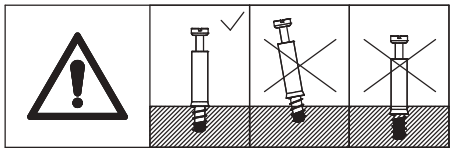

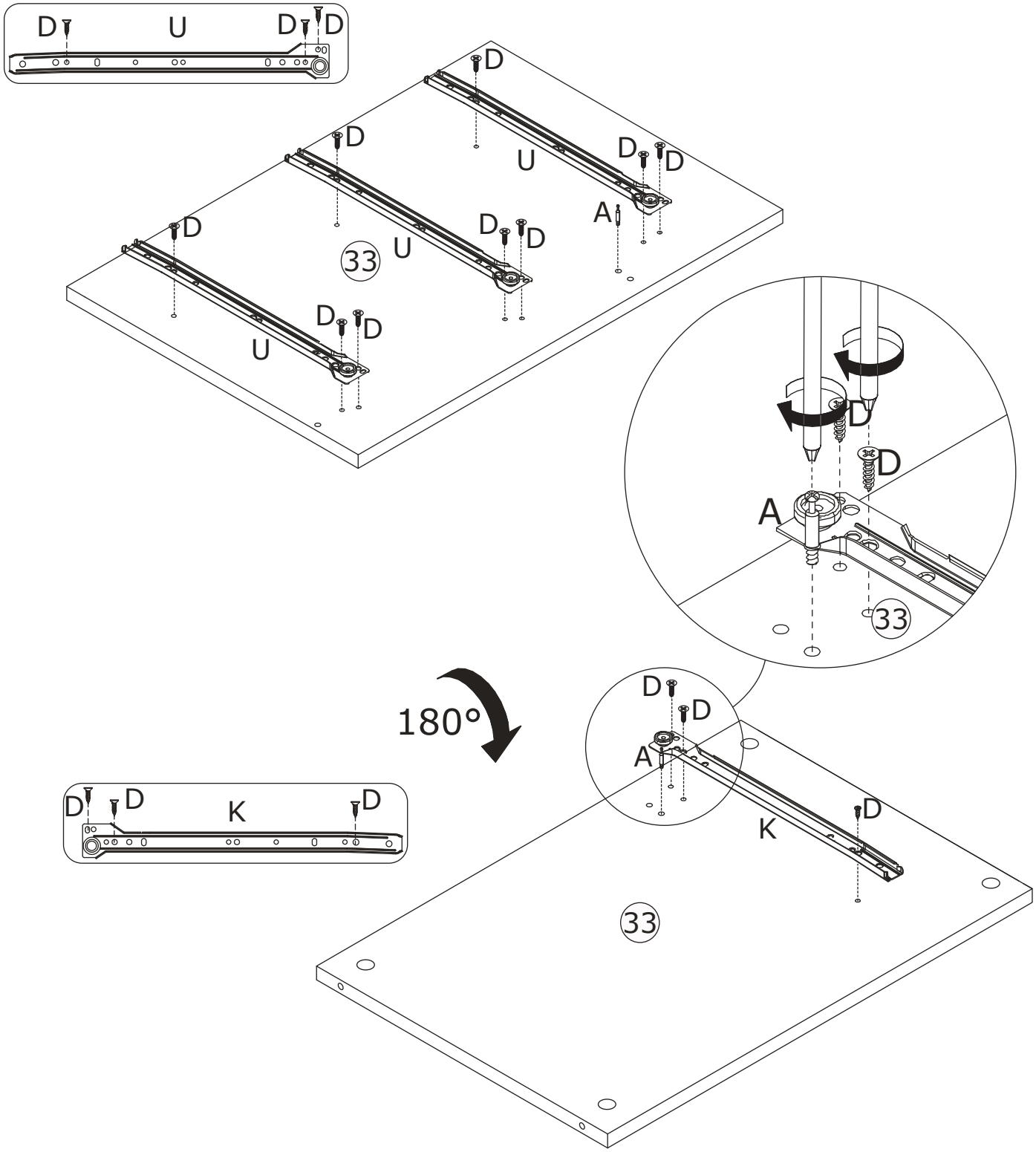

3

B x 2	H x 2	
∅9.5 x 15 mm	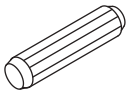 ∅6 x 30 mm	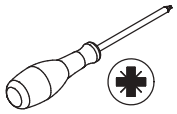

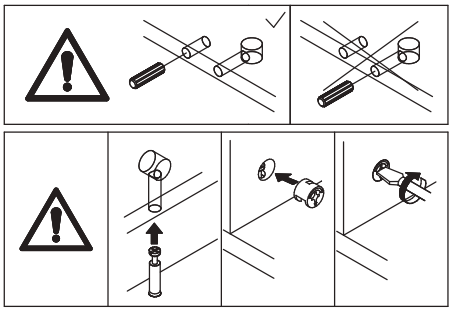

Attach and secure board 34 to boards 32 and 33 with fittings (B) and (H) as shown.

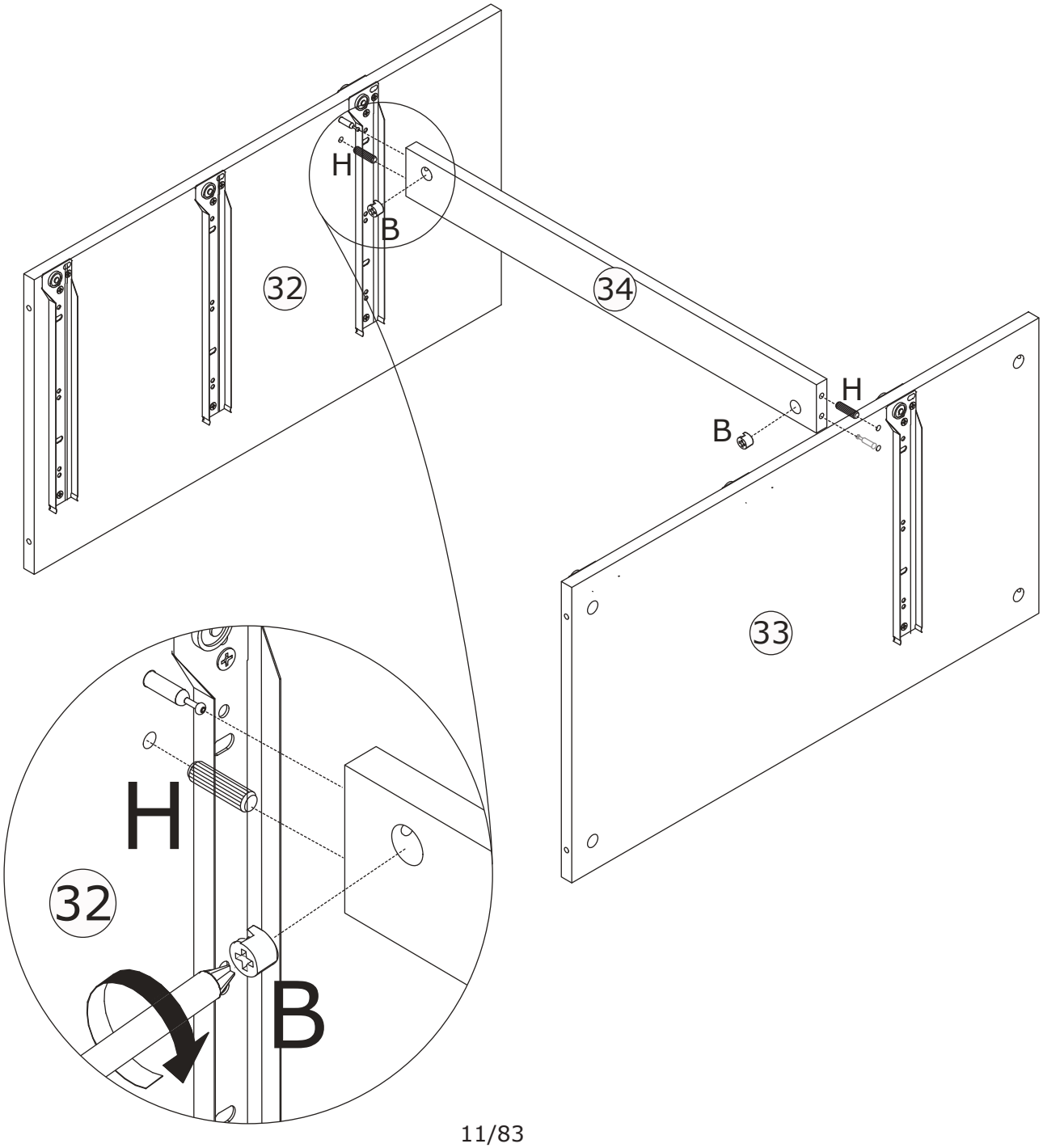

4

A x 14

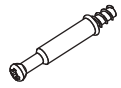

∅6 x 35 mm

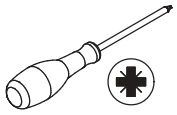

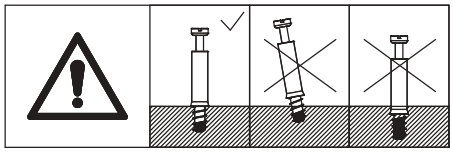

Install accessory (A) on board 24 as shown.

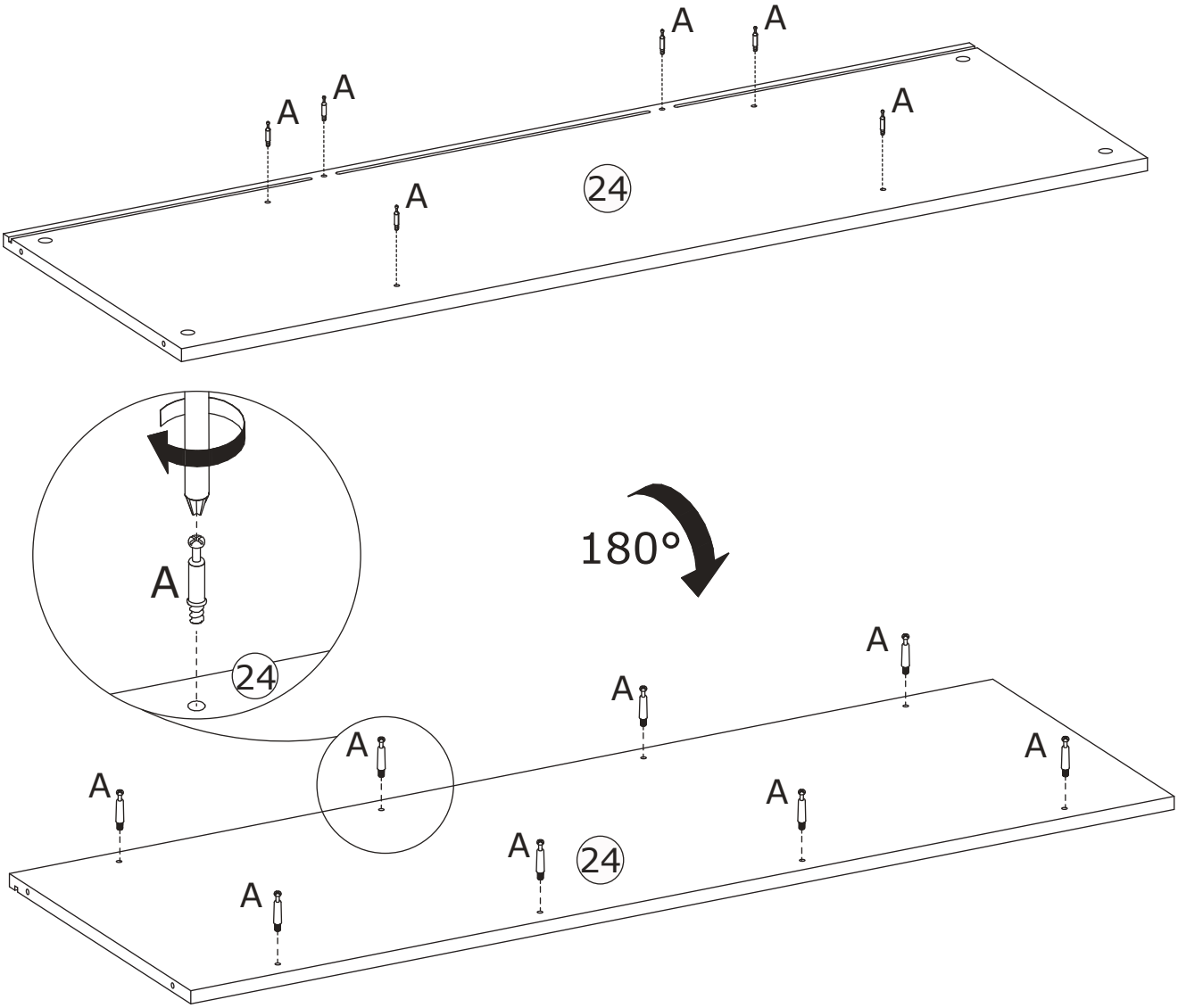

5

B x 4	
∅9.5 x 15 mm	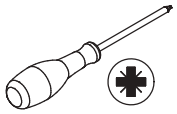

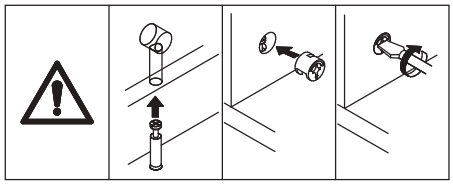

Connect and secure board 24 to boards 32, 33 with fittings (B) as shown.

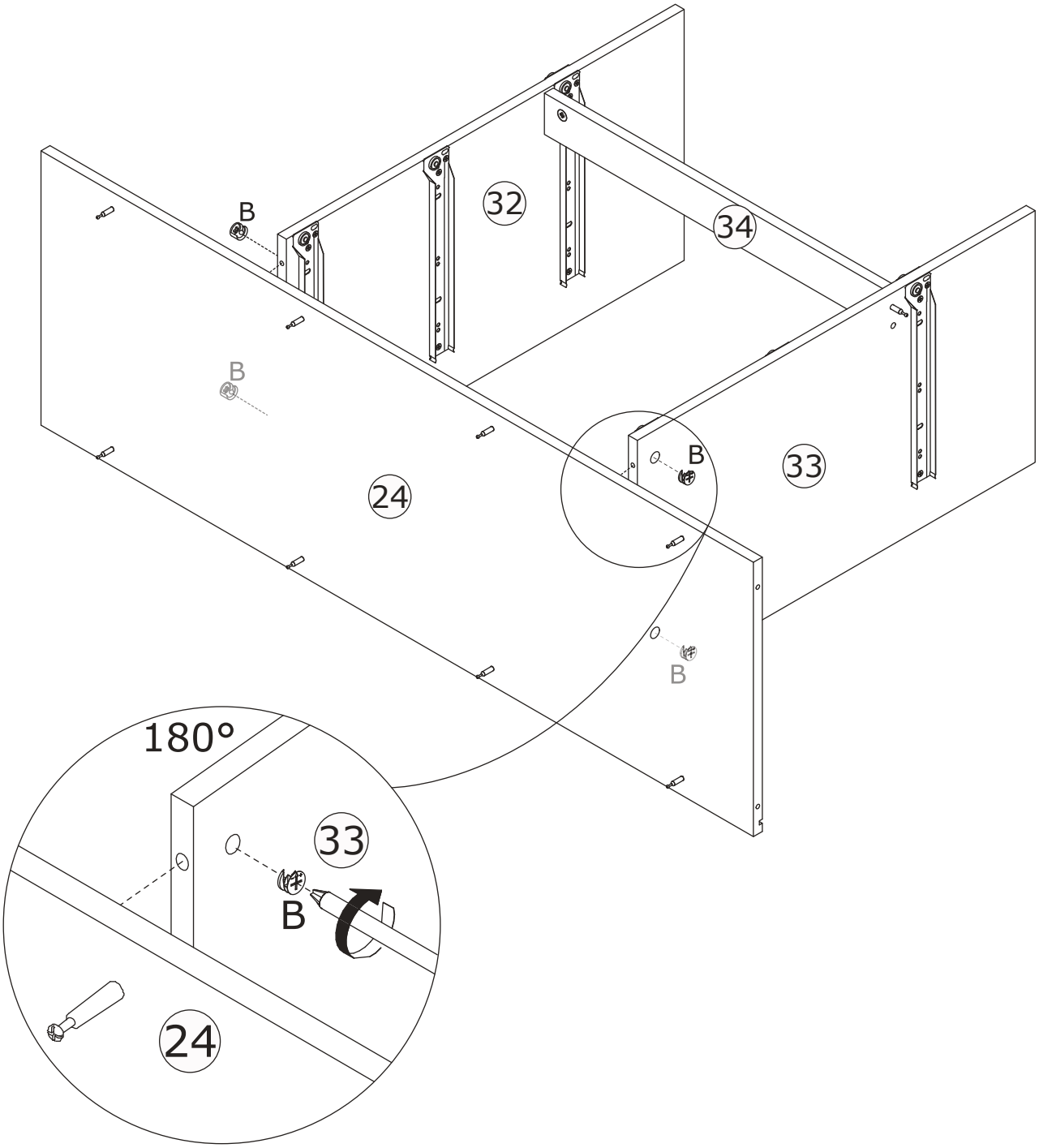

6

B x 8

∅9.5 x 15 mm

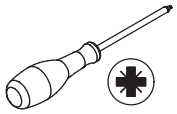

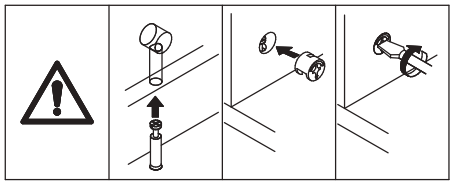

Connect and secure boards 25, 26 and board 24 with fitting (B) as shown.

7

A x 7	D x 12	K x 3	U x 1	
∅6 x 35 mm	∅3.5 x 12 mm			

Attach slide (U) to plate 12 with screws (D), flip to the back and attach slide (K) to plate 12 with screws (D), and attach screws (A) to plate 12 as shown.

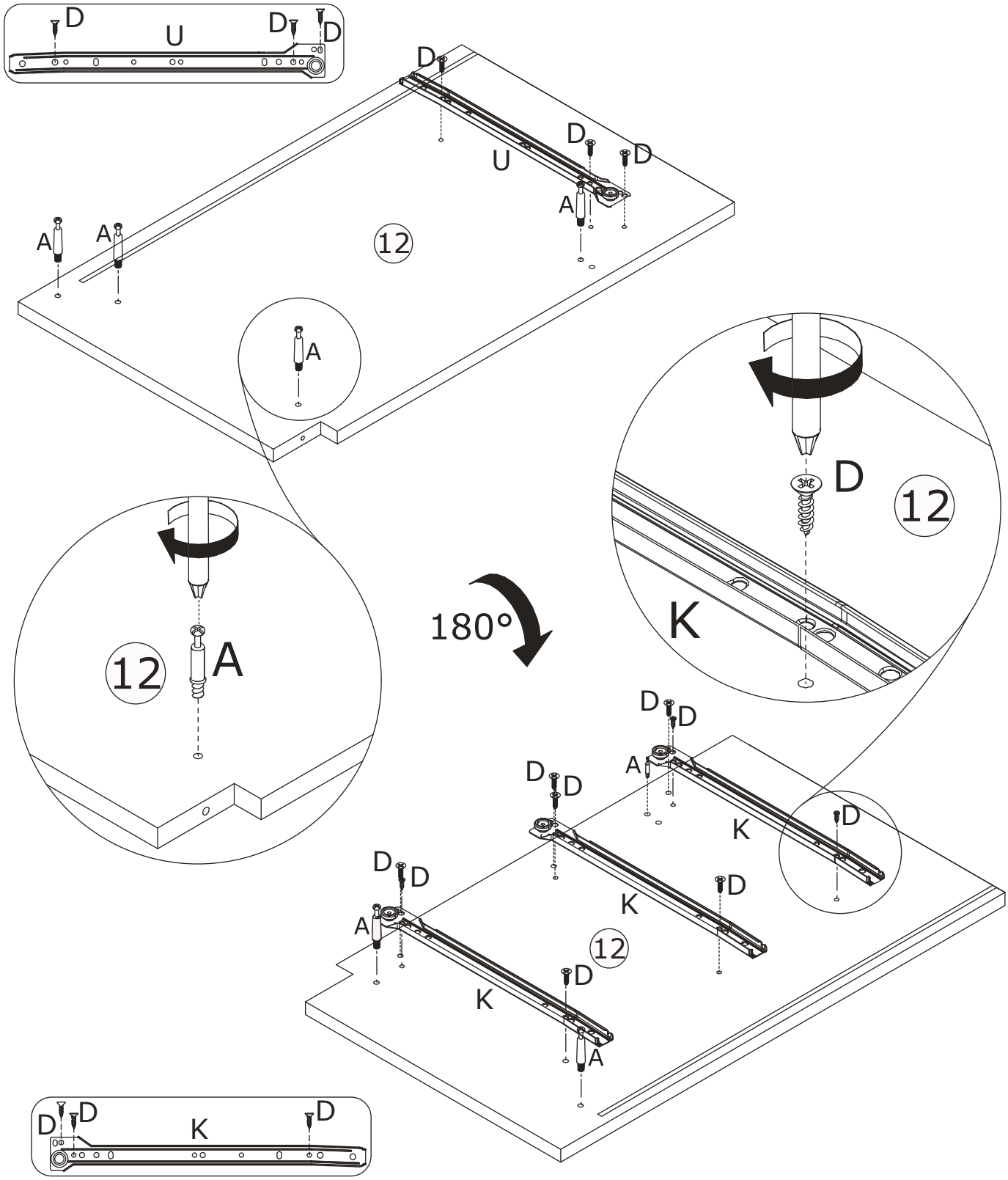

8

A x 7	D x 12	K x 1	U x 3	
∅6 x 35 mm	∅3.5 x 12 mm			

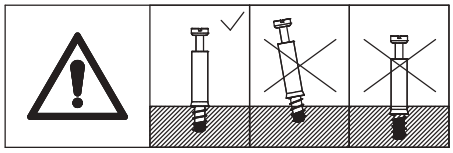

Attach slide (U) to plate 11with screws (D), flip to the back and attach slide (K) to plate 11 with screws (D), and attach screws (A) to plate 11 as shown.

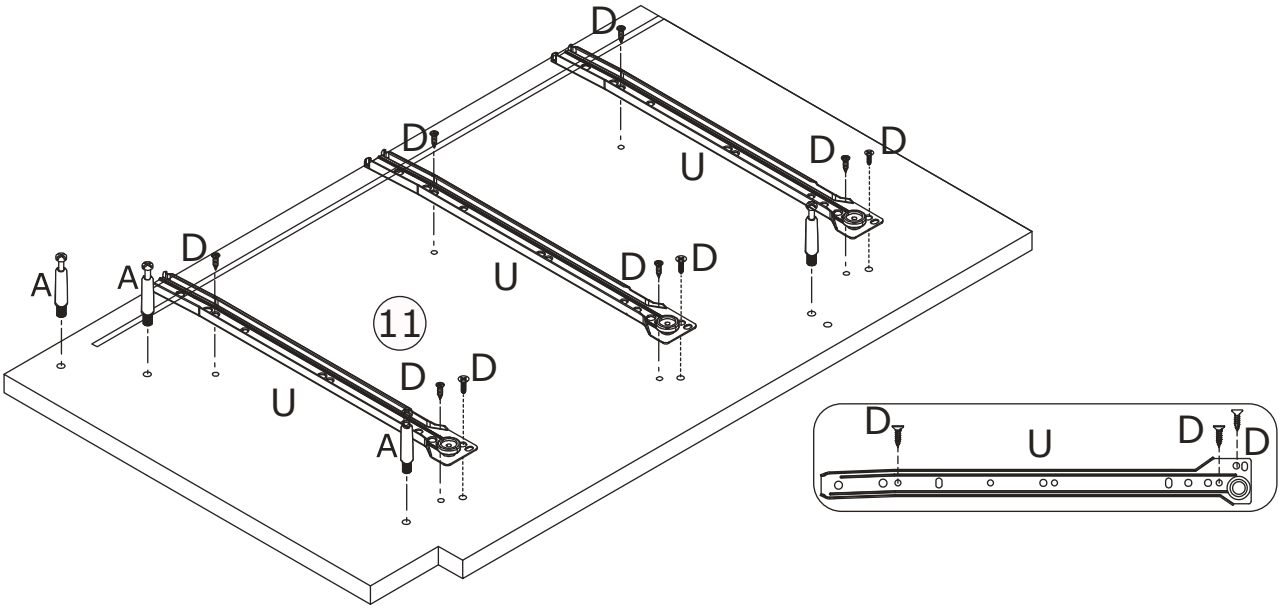

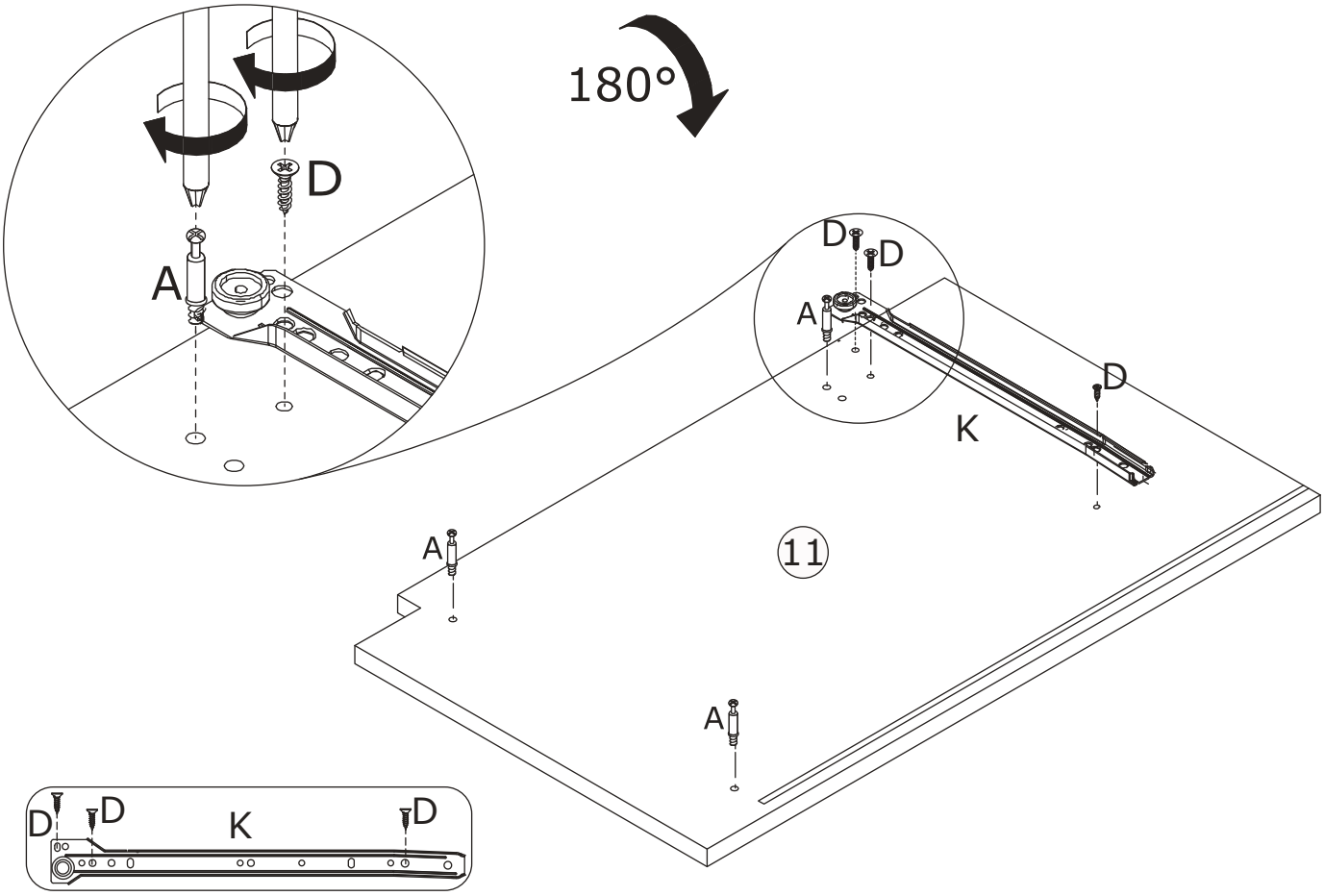

9

B x 2	H x 2	
∅9.5 x 15 mm	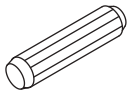 ∅6 x 30 mm	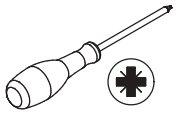

Attach plate 35 to plates 32 and 33 respectively and secure with fittings (B) and (H) as shown.

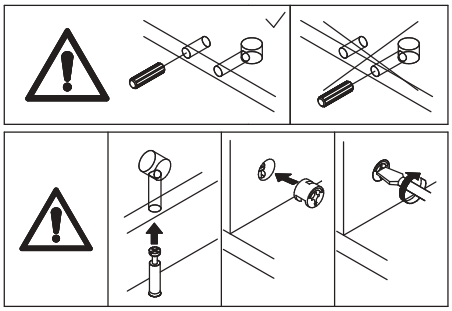

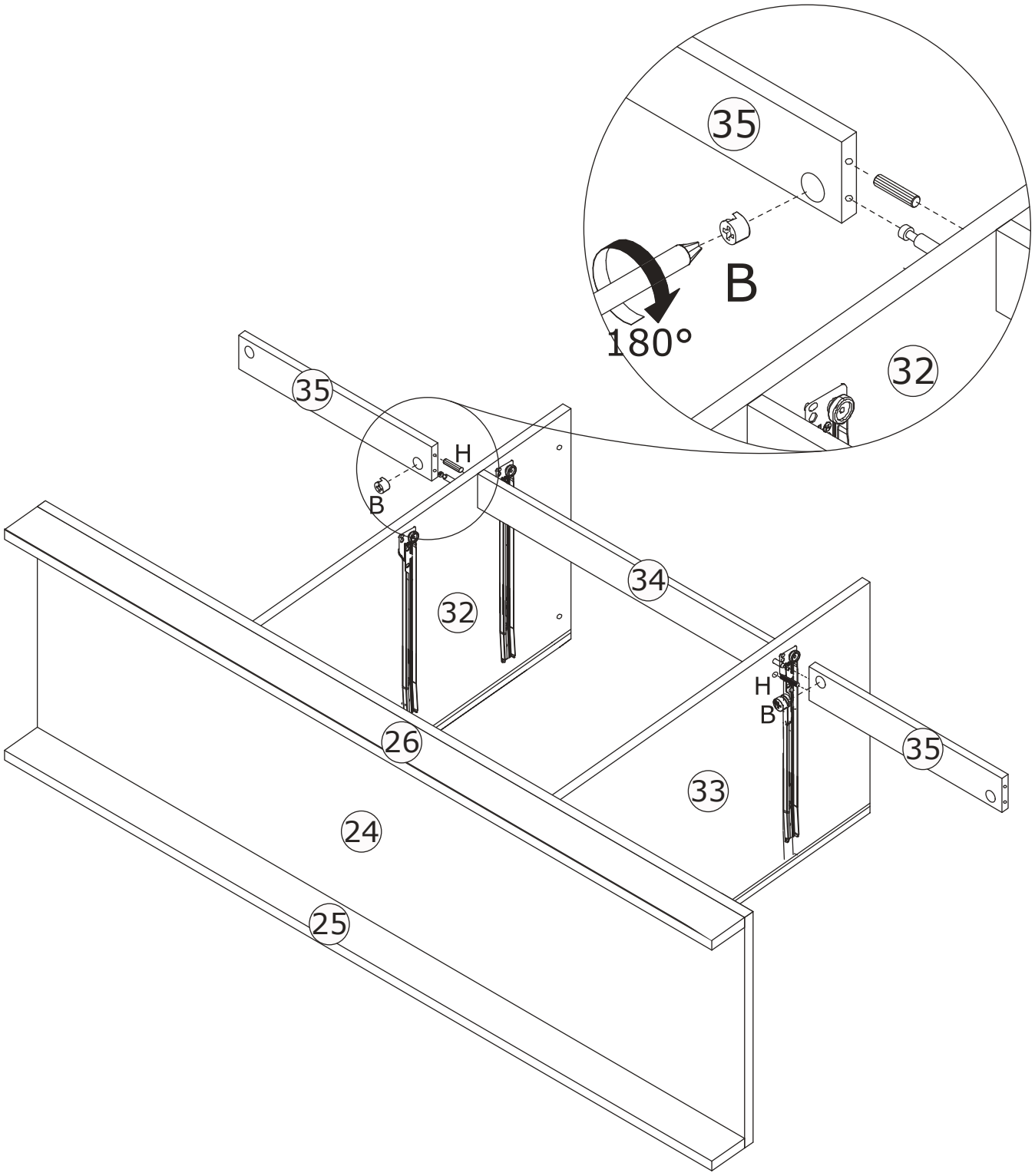

10

B x 6	D x 16	H x 2	Y x 4	
∅9.5 x 15 mm	∅3.5 x 12 mm	∅6 x 30 mm		

Connect plates 11 and 12 to the assembled part and secure with fittings (B), (D), (H), (Y) as shown.

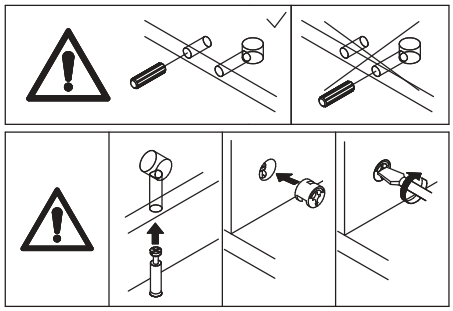

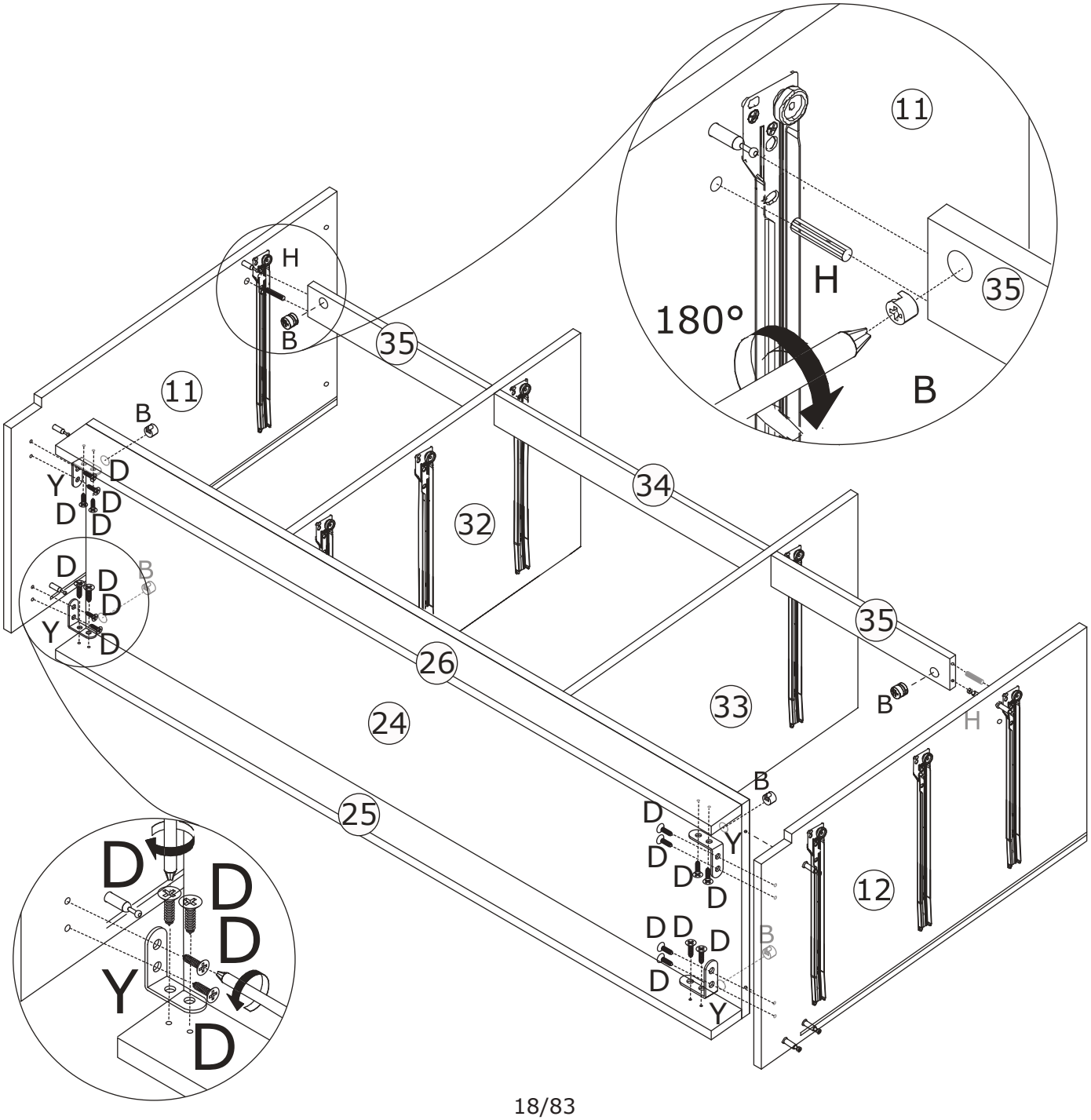

11

A x 8

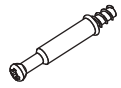

∅6 x 35 mm

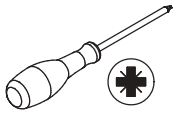

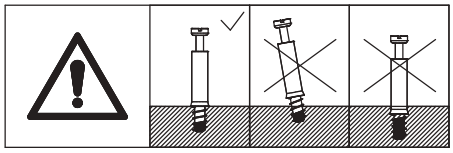

Install accessory (A) on board 8 as shown.

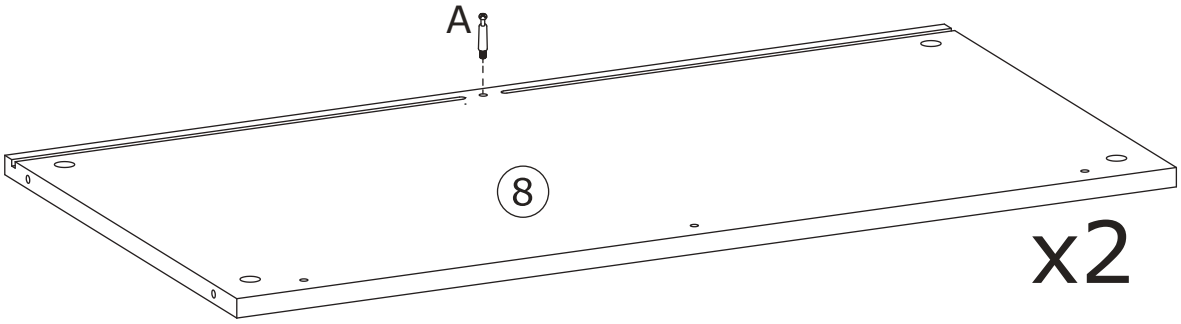

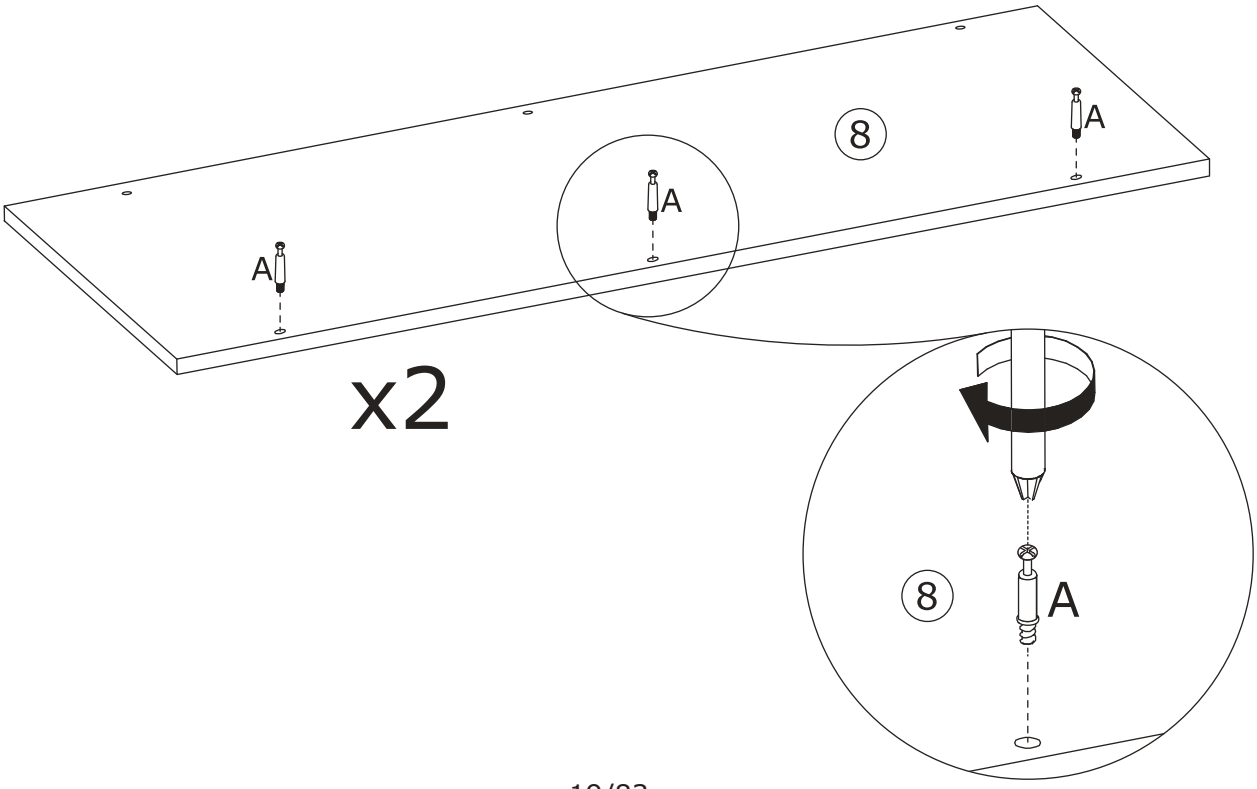

12

B x 6

∅9.5 x 15 mm

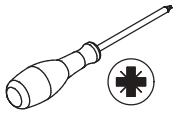

Attach plate 8 to plate 13 and secure with screws (B) as shown.

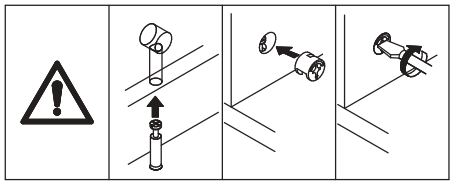

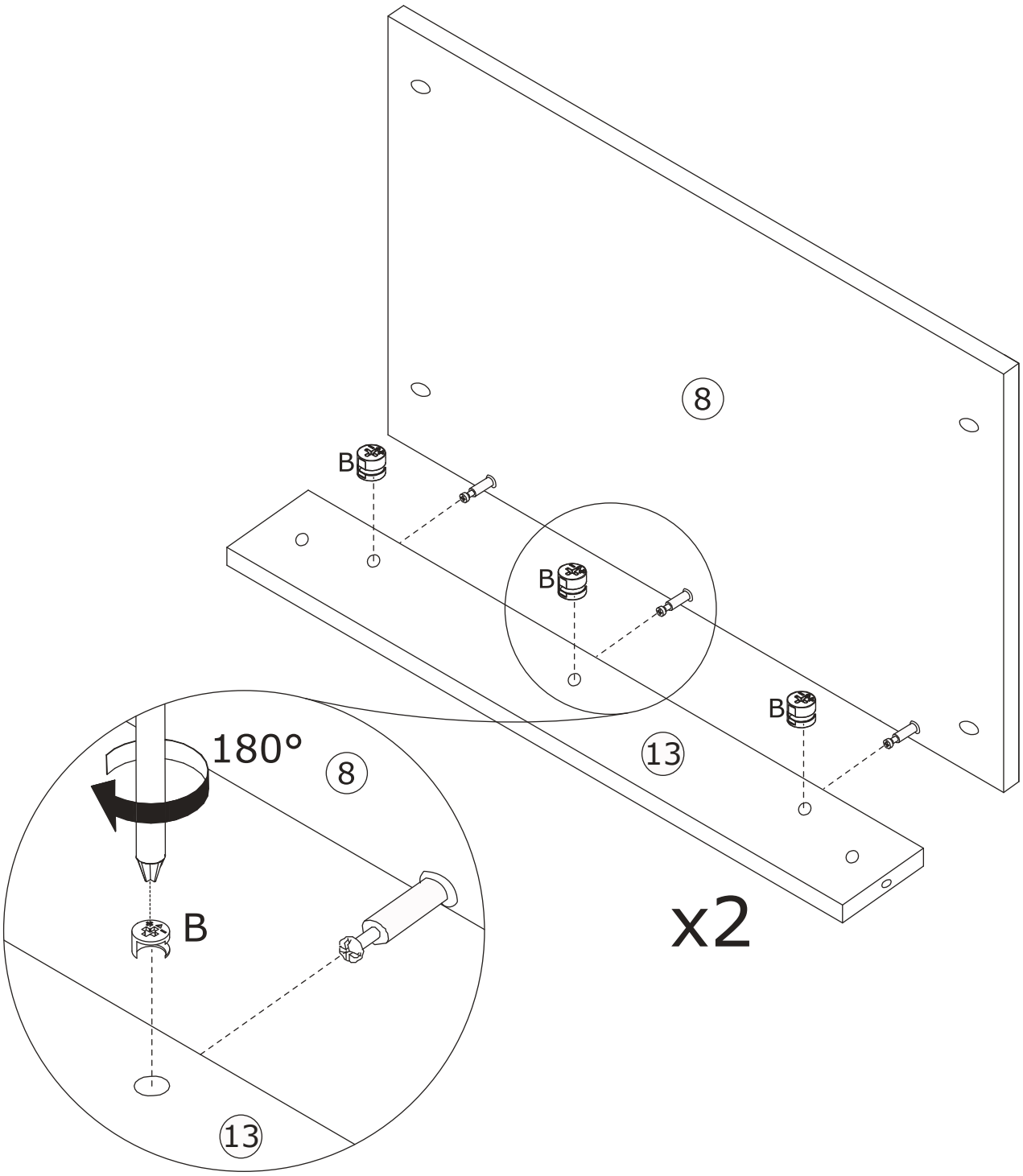

13

B x 4	H x 1	
	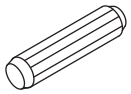	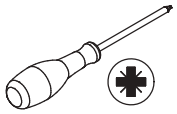
∅9.5 x 15 mm	∅6 x 30 mm	

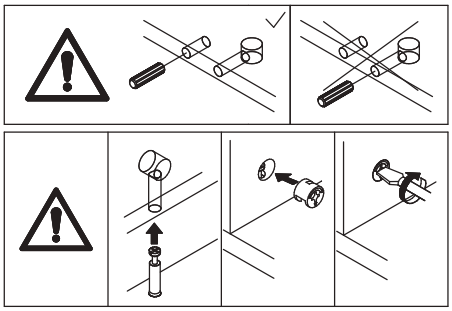

Connect and secure boards 8, 13, 15 and board 11 together with fittings (B), (H) as shown.

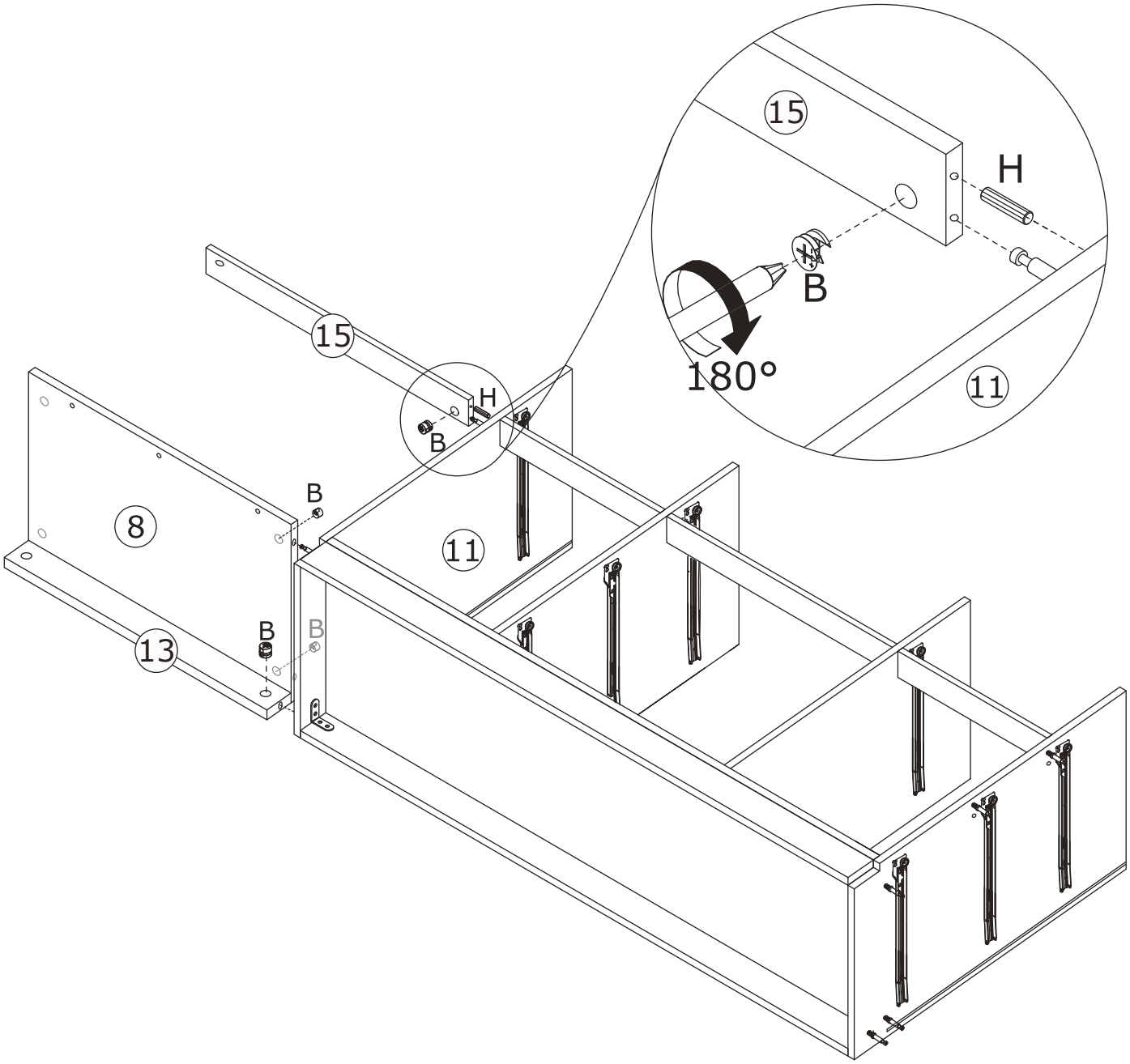

14

A x 4	D x 9	K x 3	
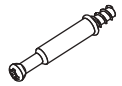 ∅6 x 35 mm	∅3.5 x 12 mm	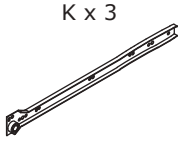	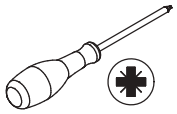

Secure the slide (K) to plate 9 with screws (D) and mount the fitting (A) to plate 9 as shown.

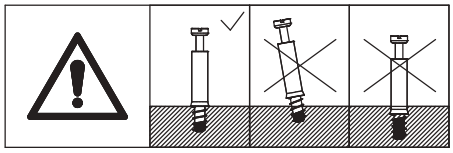

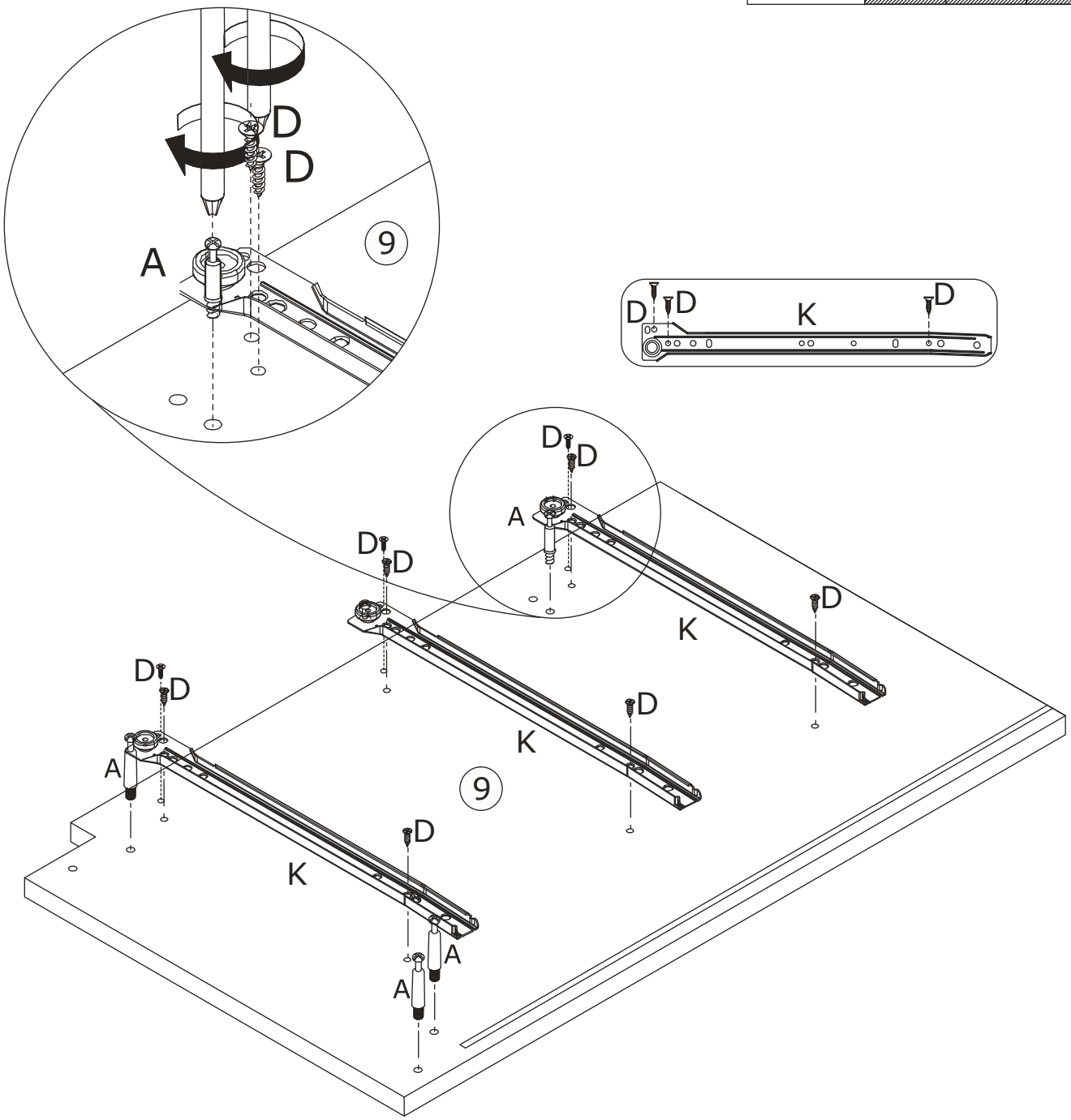

15

B x 4	H x 1	
∅9.5 x 15 mm	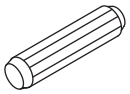 ∅6 x 30 mm	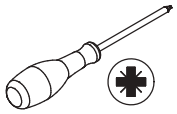

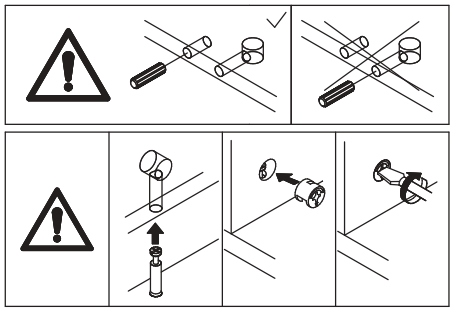

Connect plate 9 to plates 8, 13, 15 and secure with fittings (B) and (H) as shown.

16

B x 4	H x 1	
	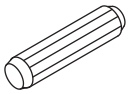	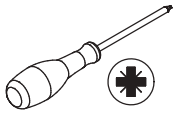
∅9.5 x 15 mm	∅6 x 30 mm	

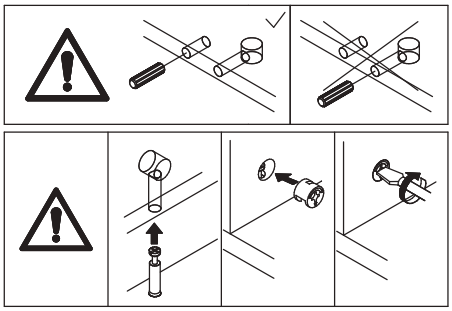

Connect plates 8, 13, 15 and plate 12 and secure with fittings (B), (H) as shown.

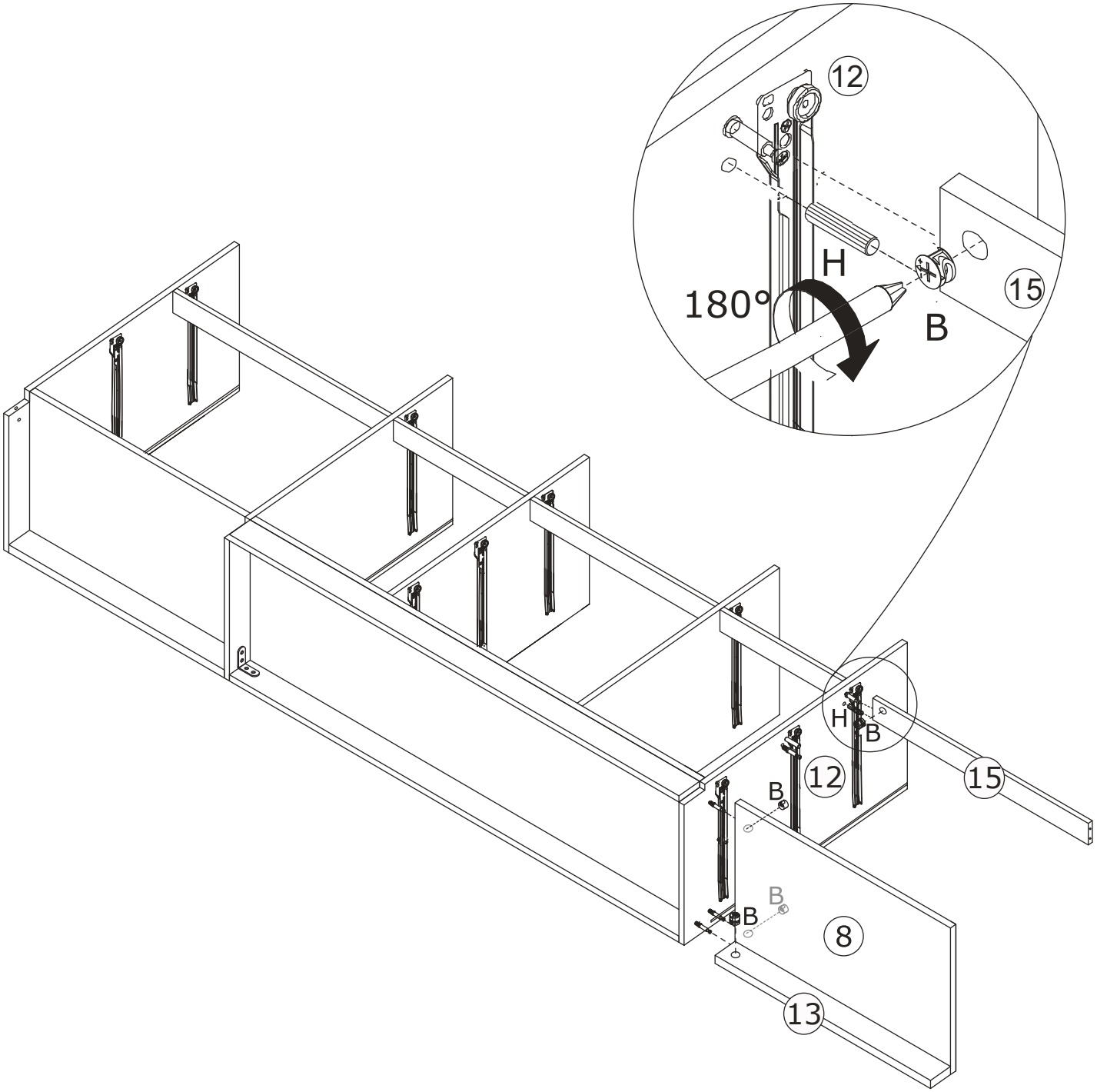

17

A x 4	D x 9	U x 3	
∅6 x 35 mm	∅3.5 x 12 mm		

Secure the slide (U) to plate 10 with screws (D) and mount the fitting (A) to plate 10 as shown.

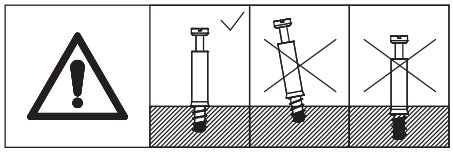

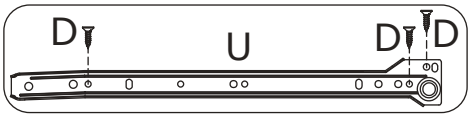

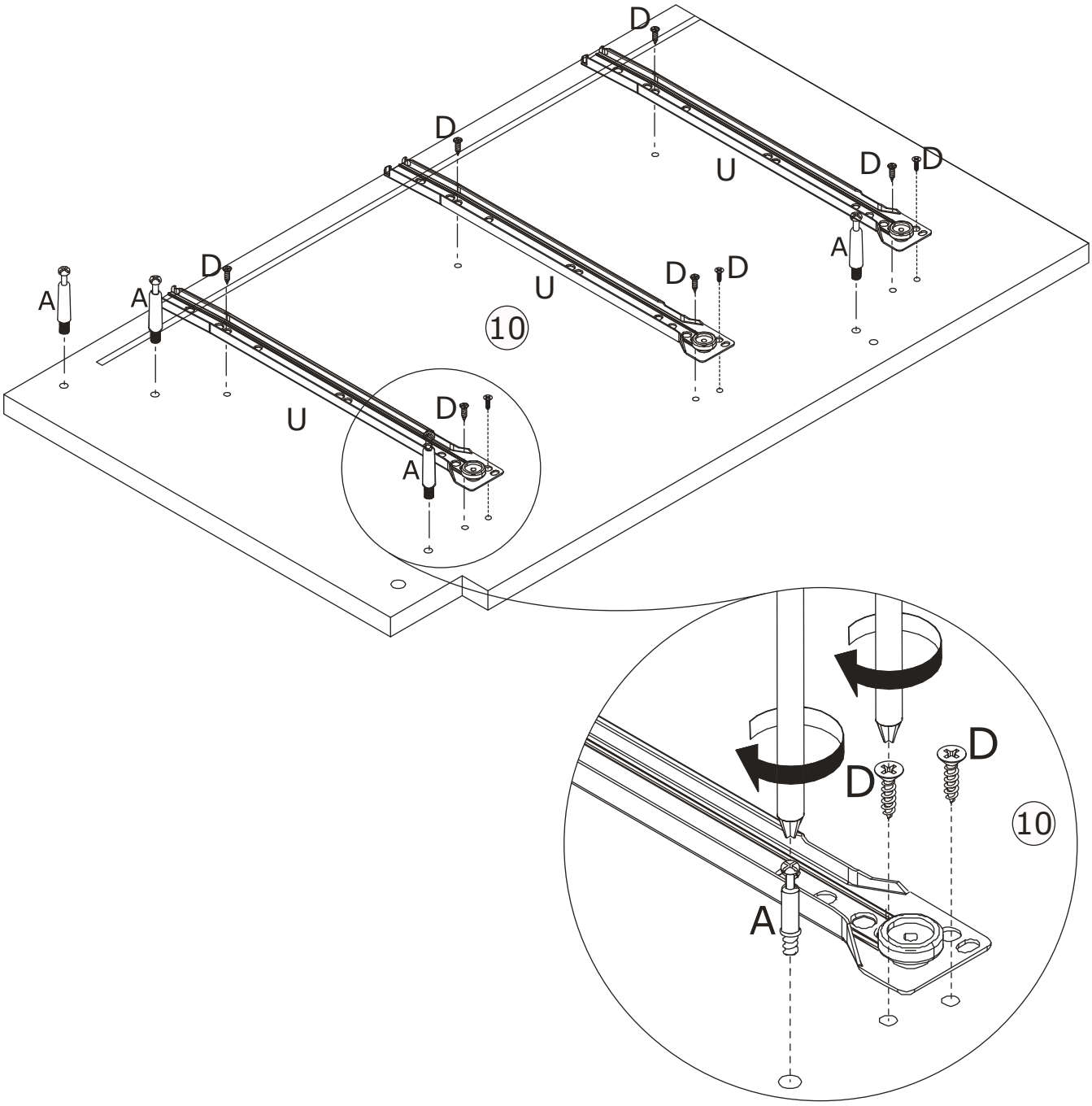

18

B x 4	H x 1	
	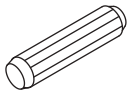	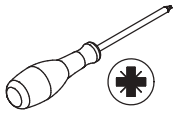
∅9.5 x 15 mm	∅6 x 30 mm	

Connect and secure plate 10 to plates 8, 13, 15 with fittings (B), (H) as shown.

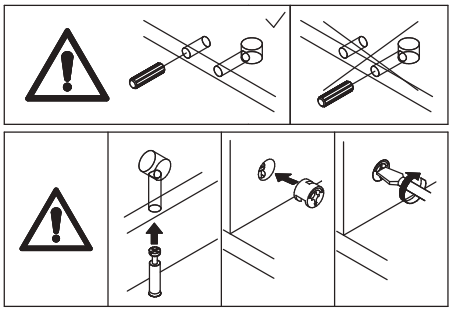

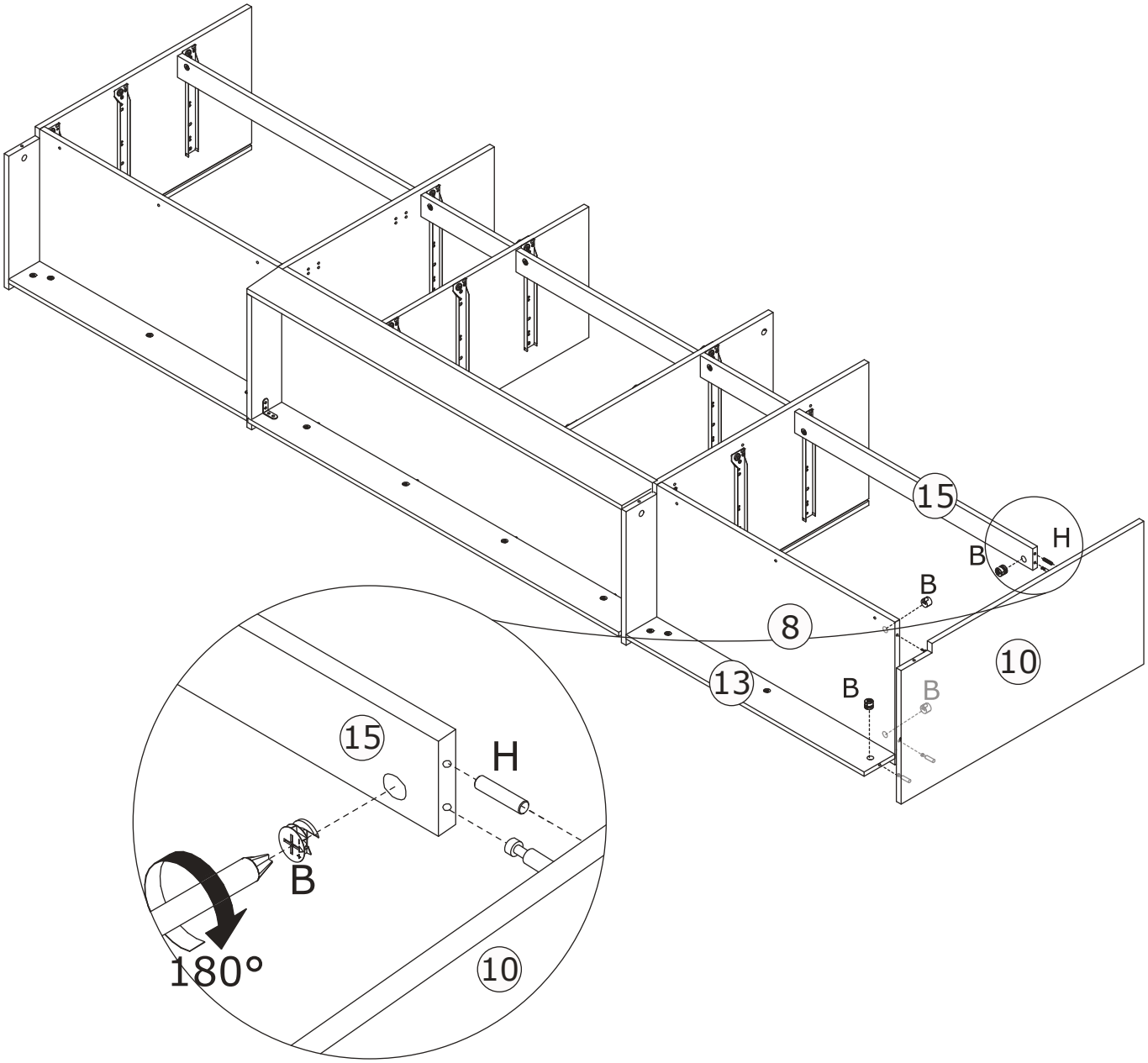

19

A x 4	B x 4	
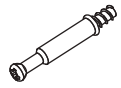		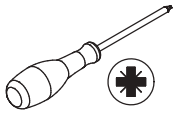
∅6 x 35 mm	∅9.5 x 15 mm	

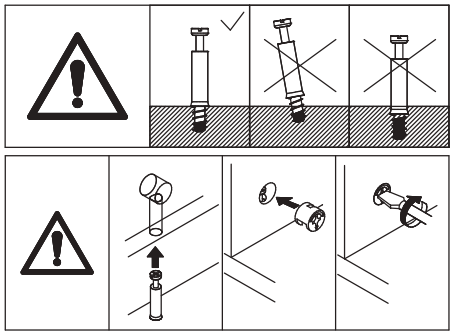

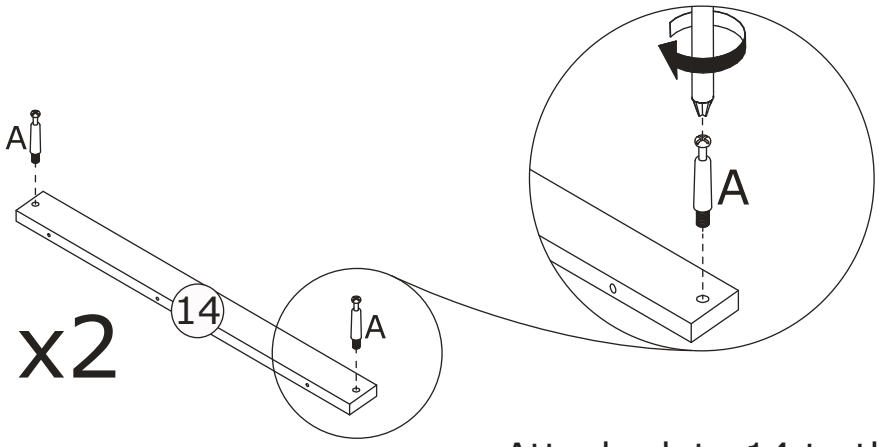

Attach plate 14 to the assembled part and secure with screws (A) and (B) as shown.

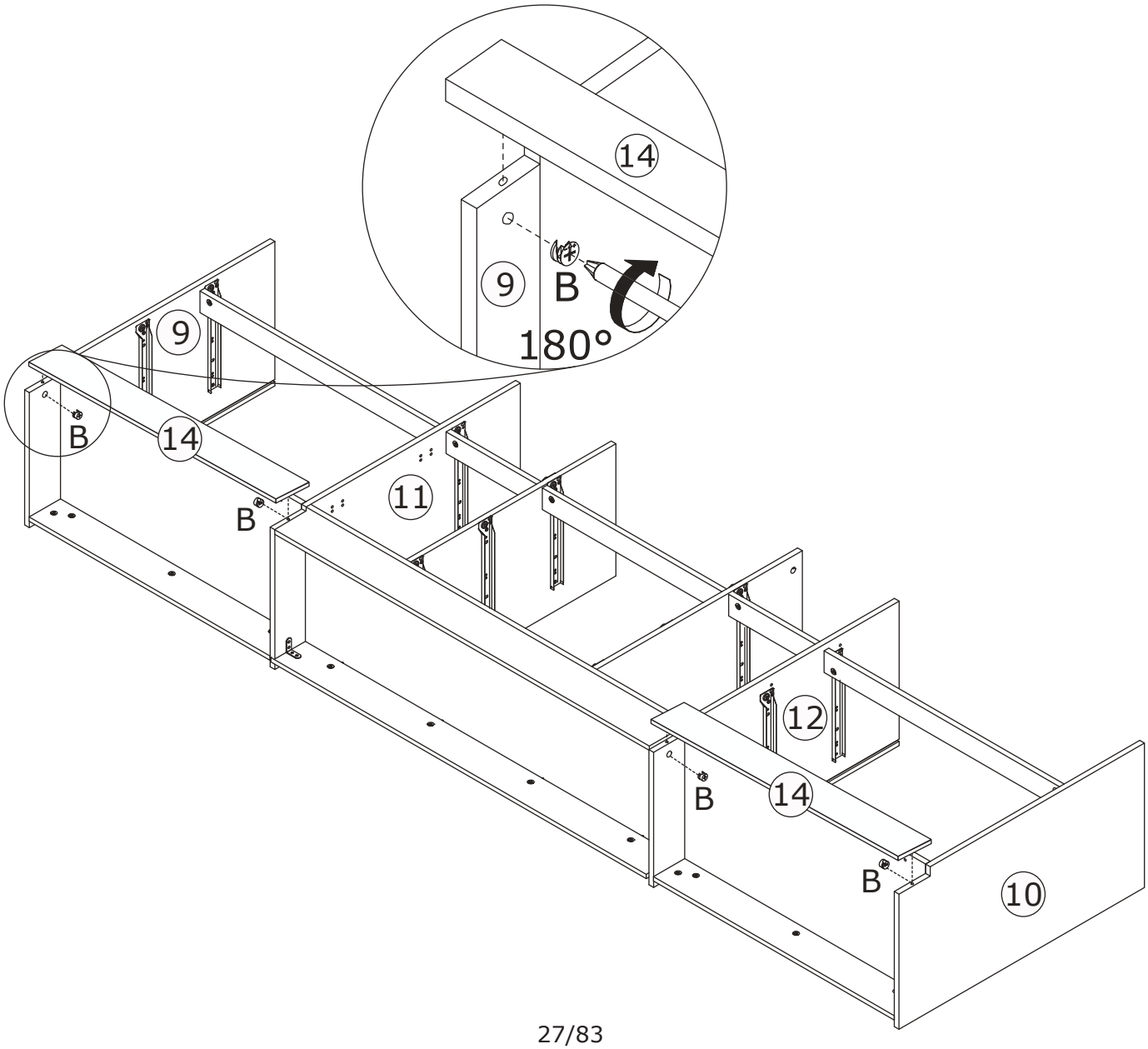

20

Q x 6

∅3 x 40 mm

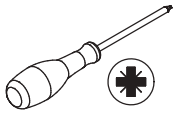

Secure plate 8 to plate 14 with screws (Q) as shown.

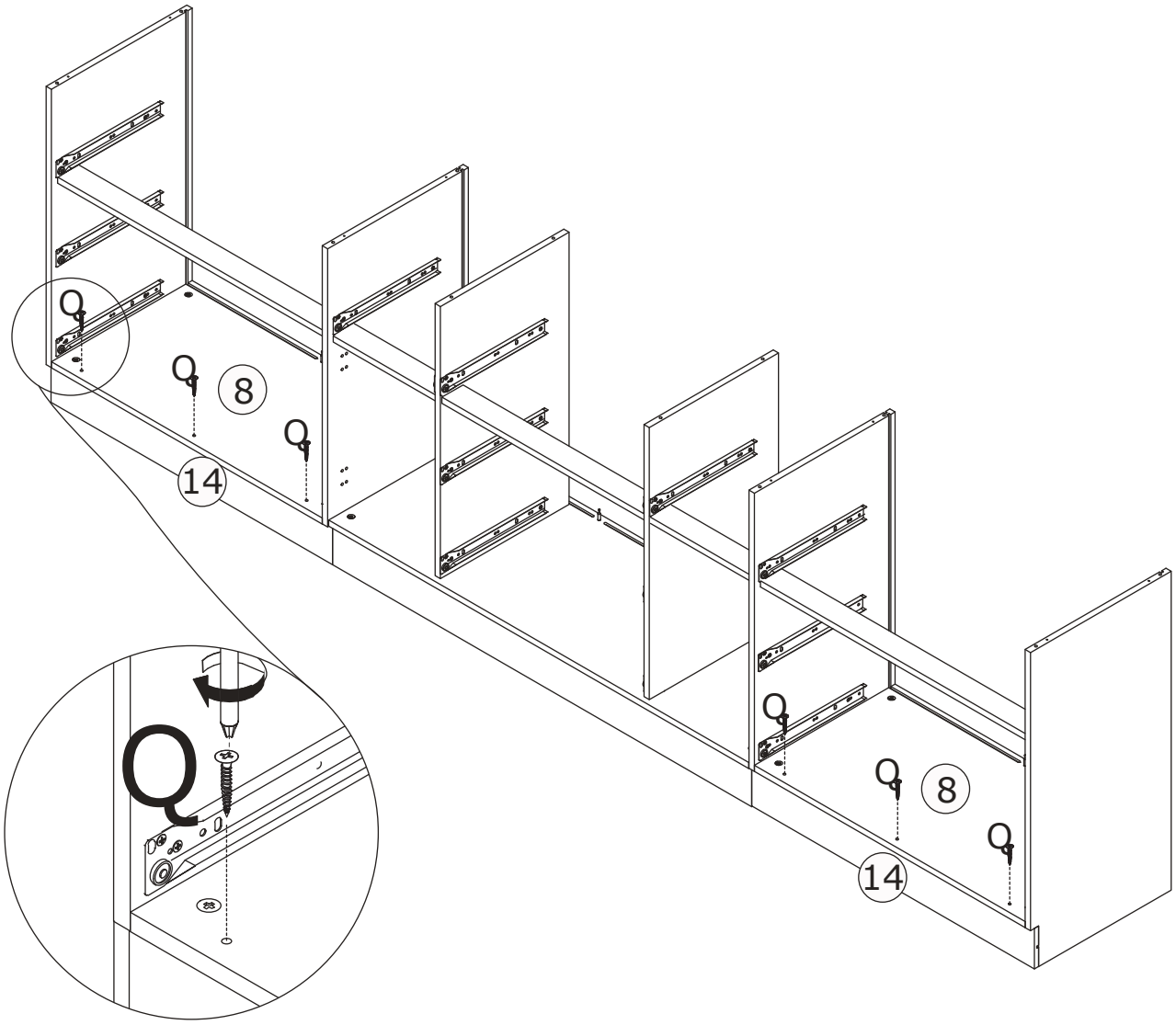

21

B x 4

∅9.5 x 15 mm

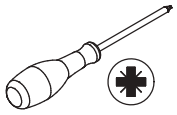

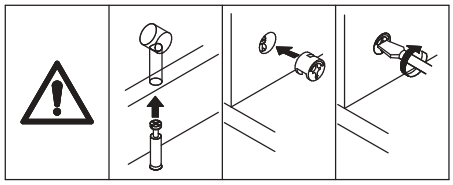

Attach plate 31 to the assembled part and secure with screws (B) as shown.

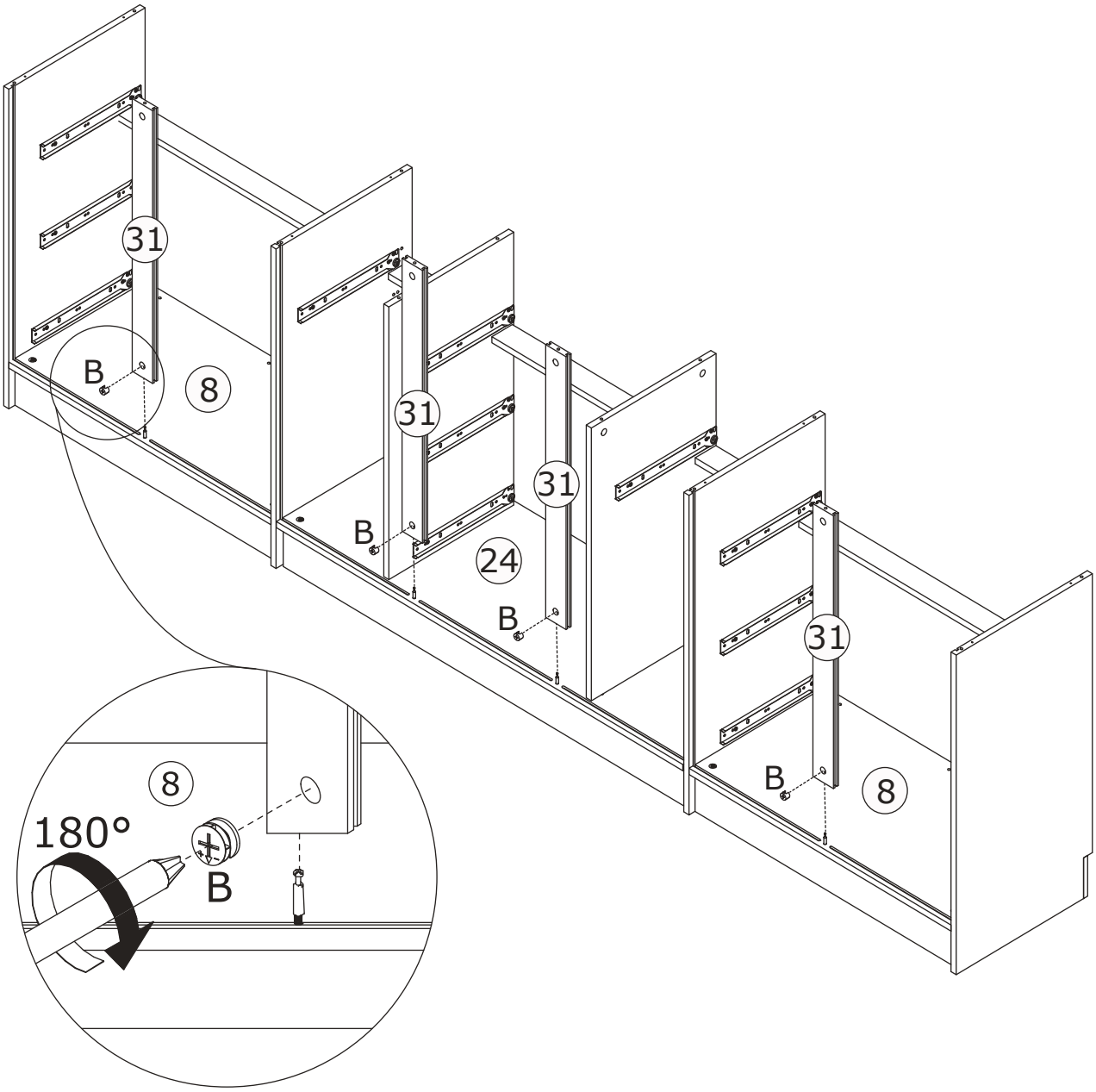

22

Place the plates 18, 30 into the grooves as shown.

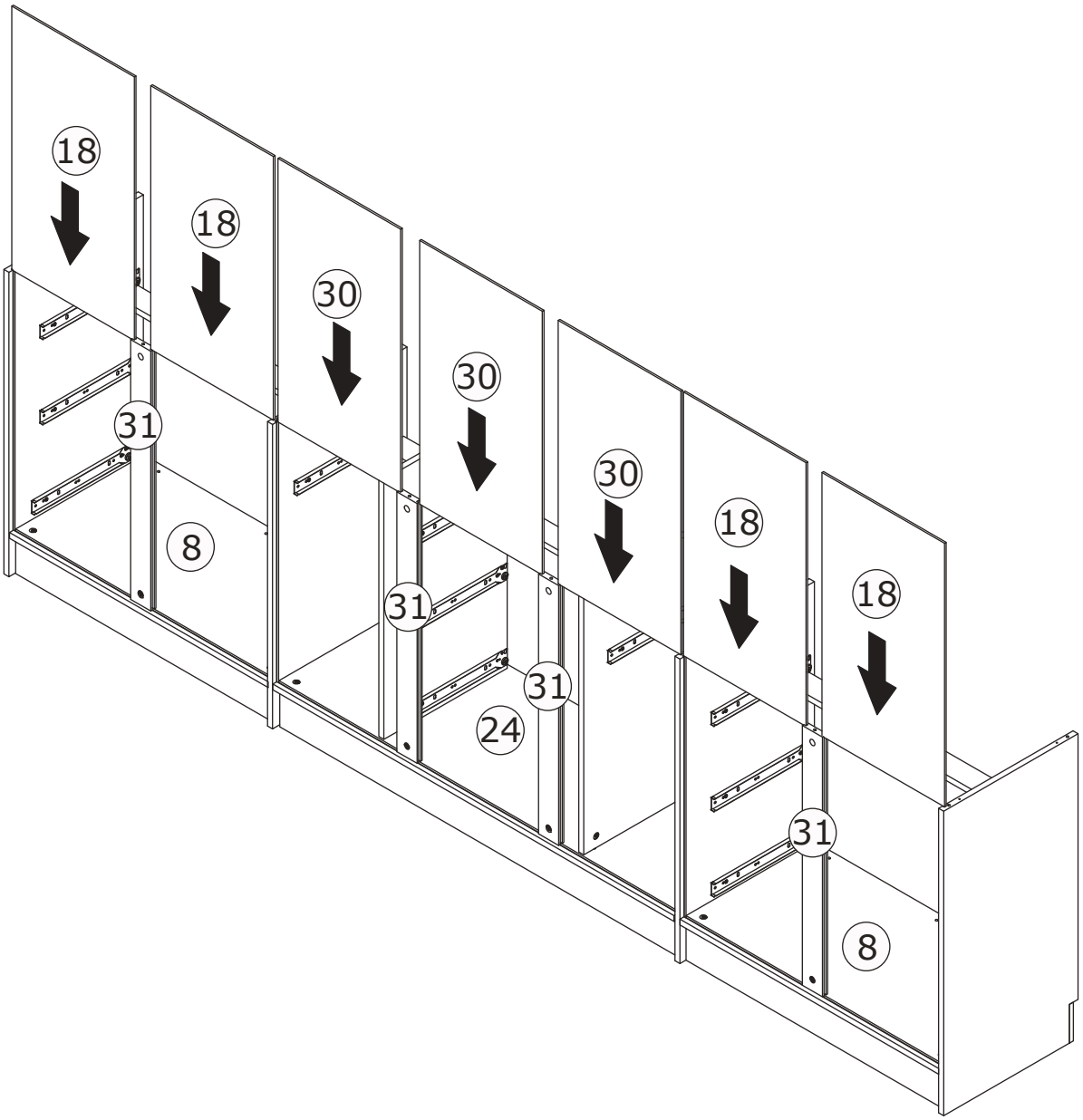

23

A x 10

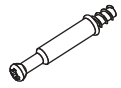

∅6 x 35 mm

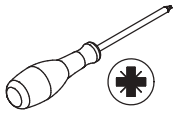

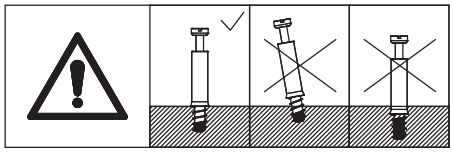

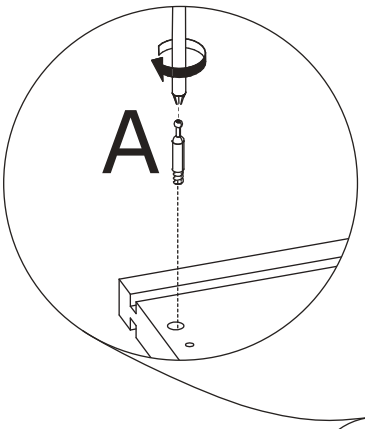

Install accessory (A) on plates 7, 53 as shown.

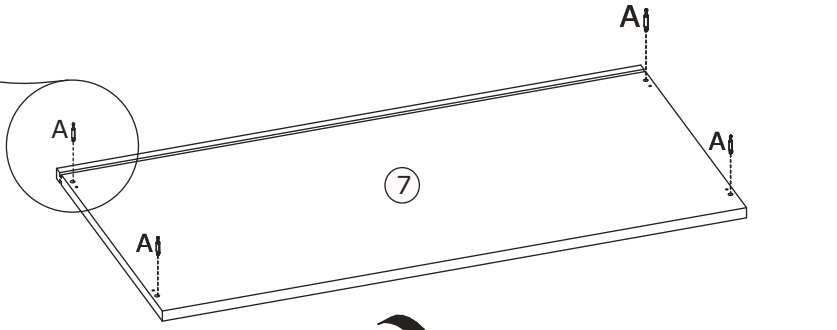

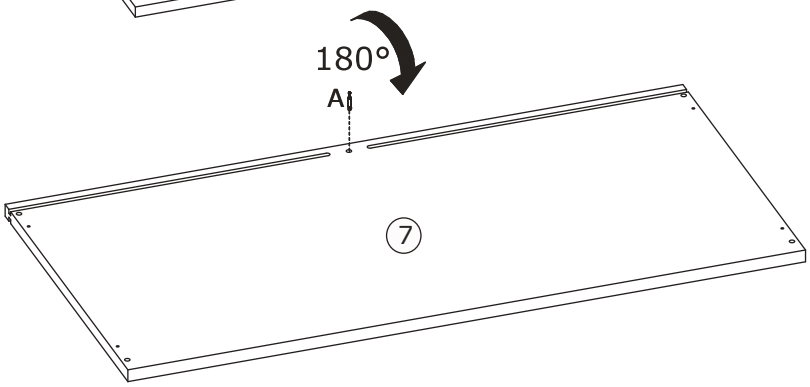

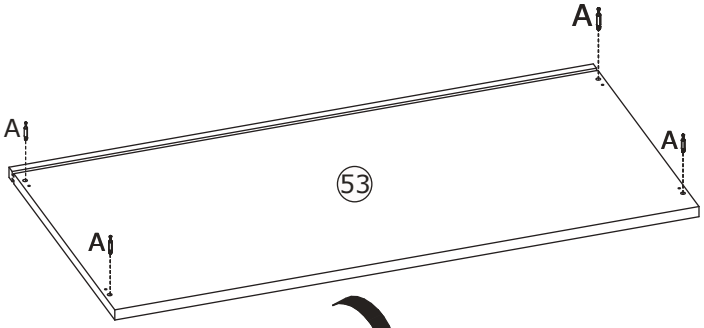

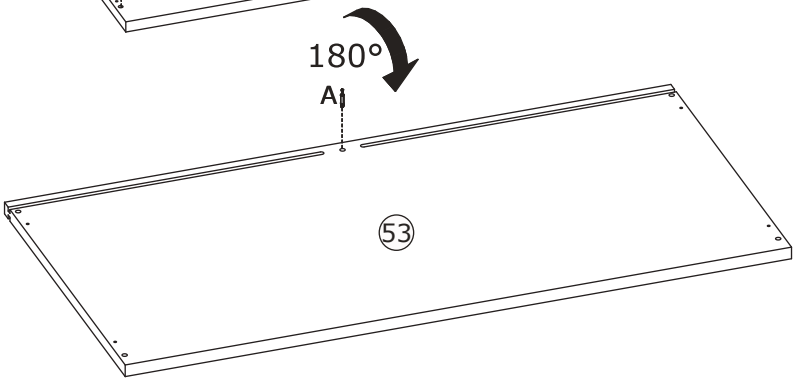

24

A x 6

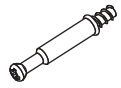

∅6 x 35 mm

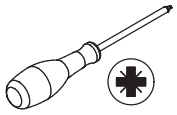

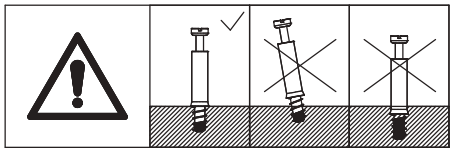

Attach fitting (A) to plate 23 as shown.

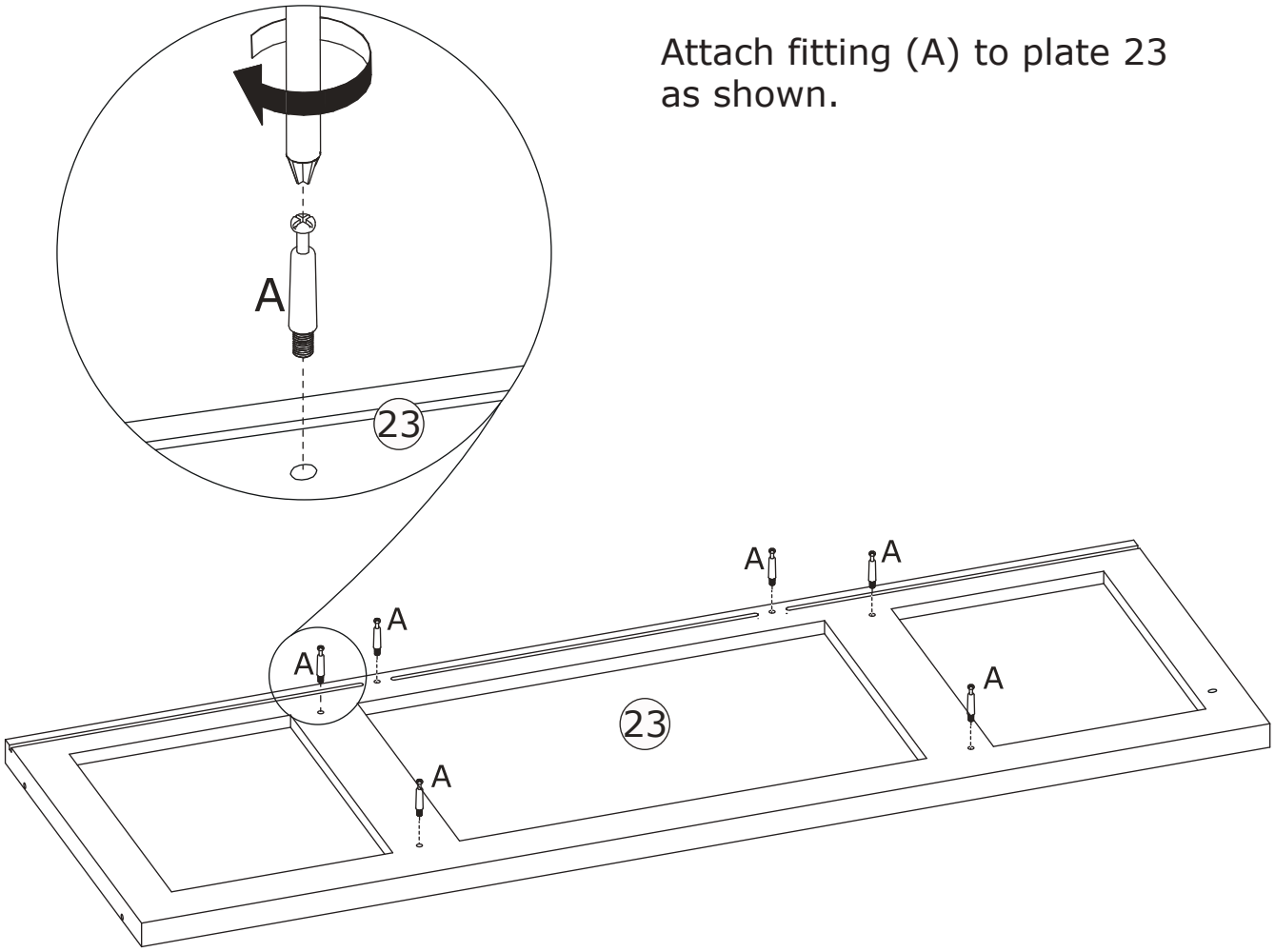

25

B x 8	H x 8	Q x 8	
∅9.5 x 15 mm	∅6 x 30 mm	∅3 x 40 mm	

First, connect plates 7 and 53 to the assembled part and secure with fittings (B), (H) and (Q), then connect plate 23 to the assembled part and secure with fitting (B) as shown.

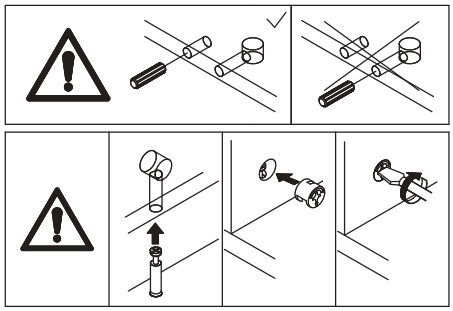

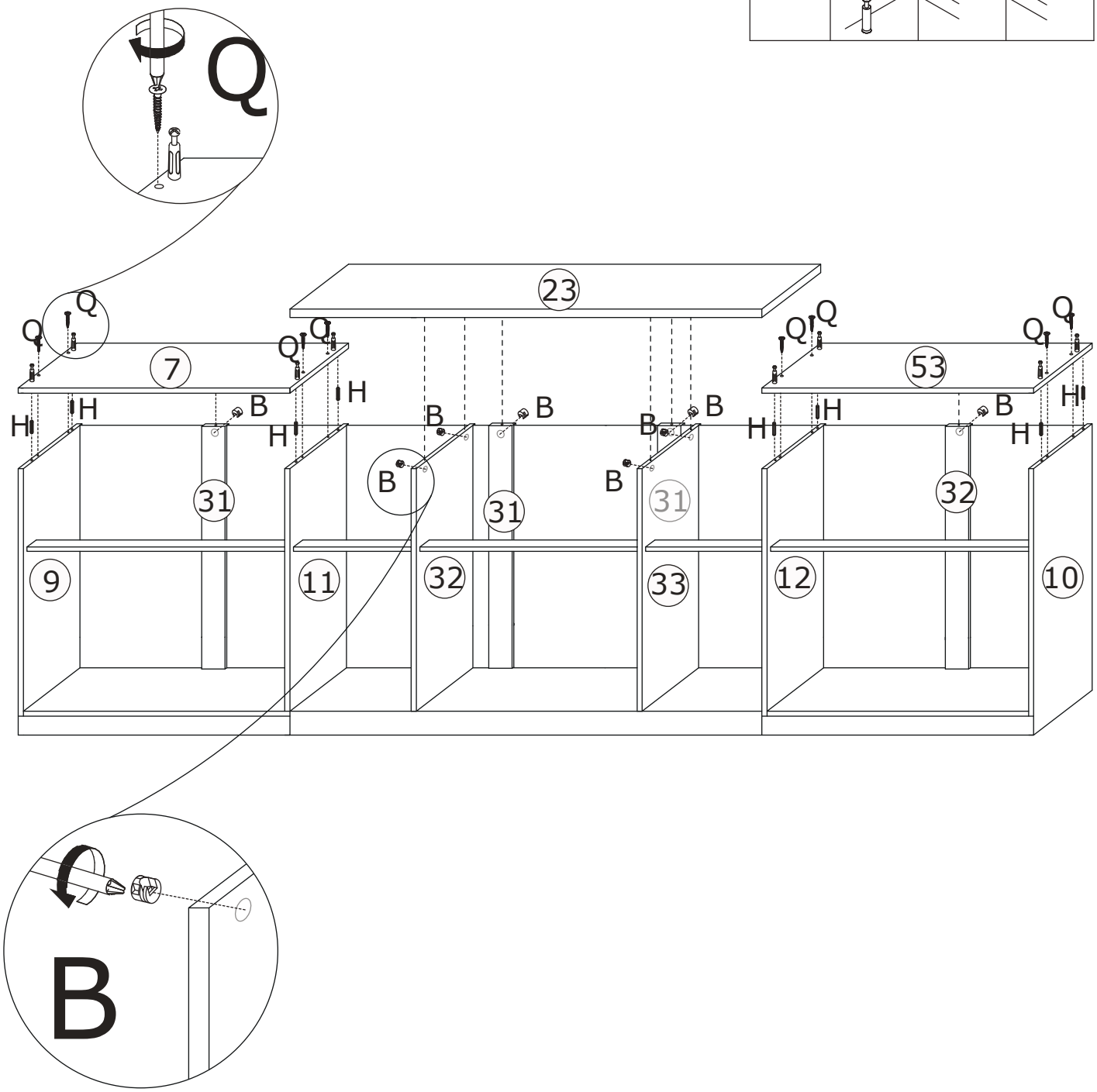

26

A x 4

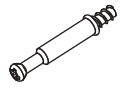

∅6 x 35 mm

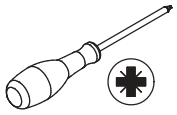

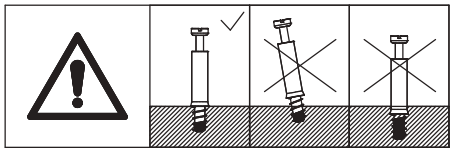

Install accessory (A) on board 19 as shown.

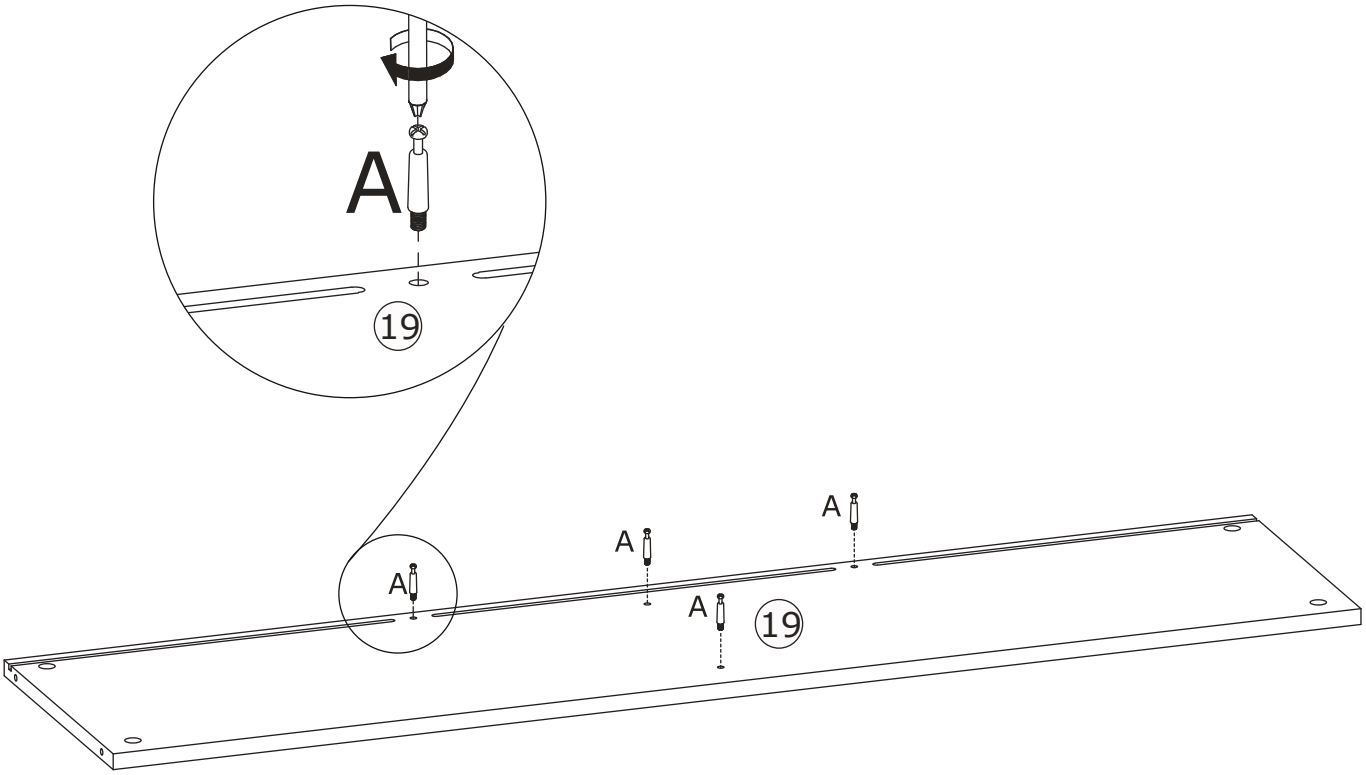

27

A x 8

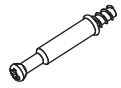

∅6 x 35 mm

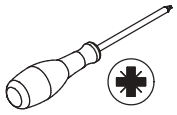

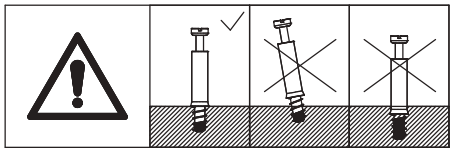

Install accessory (A) on board 20 as shown.

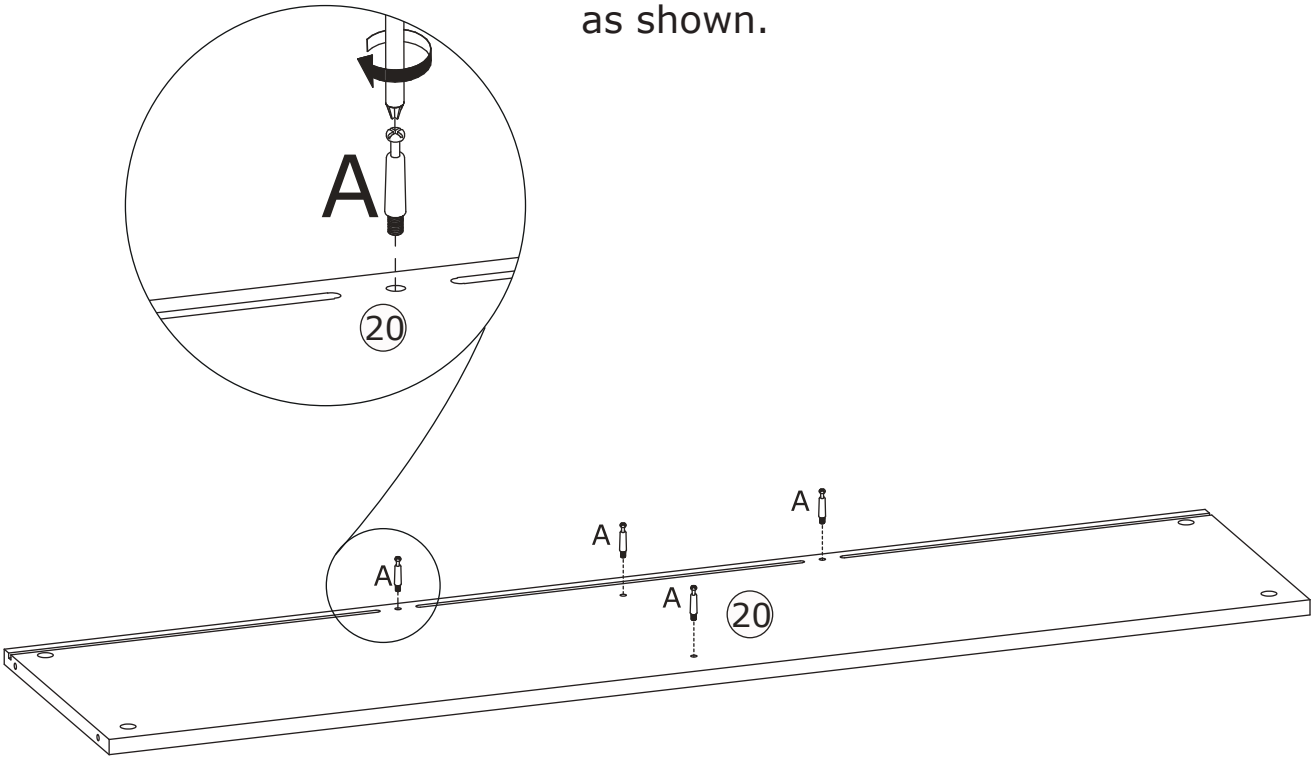

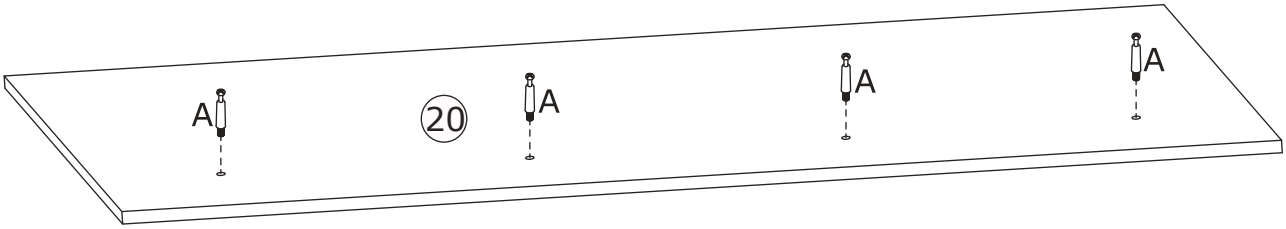

28

B x 2

∅9.5 x 15 mm

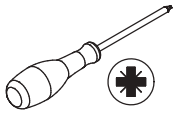

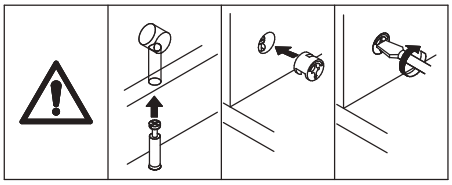

Connect plate 20 to plate 21 and secure with screws (B) as shown.

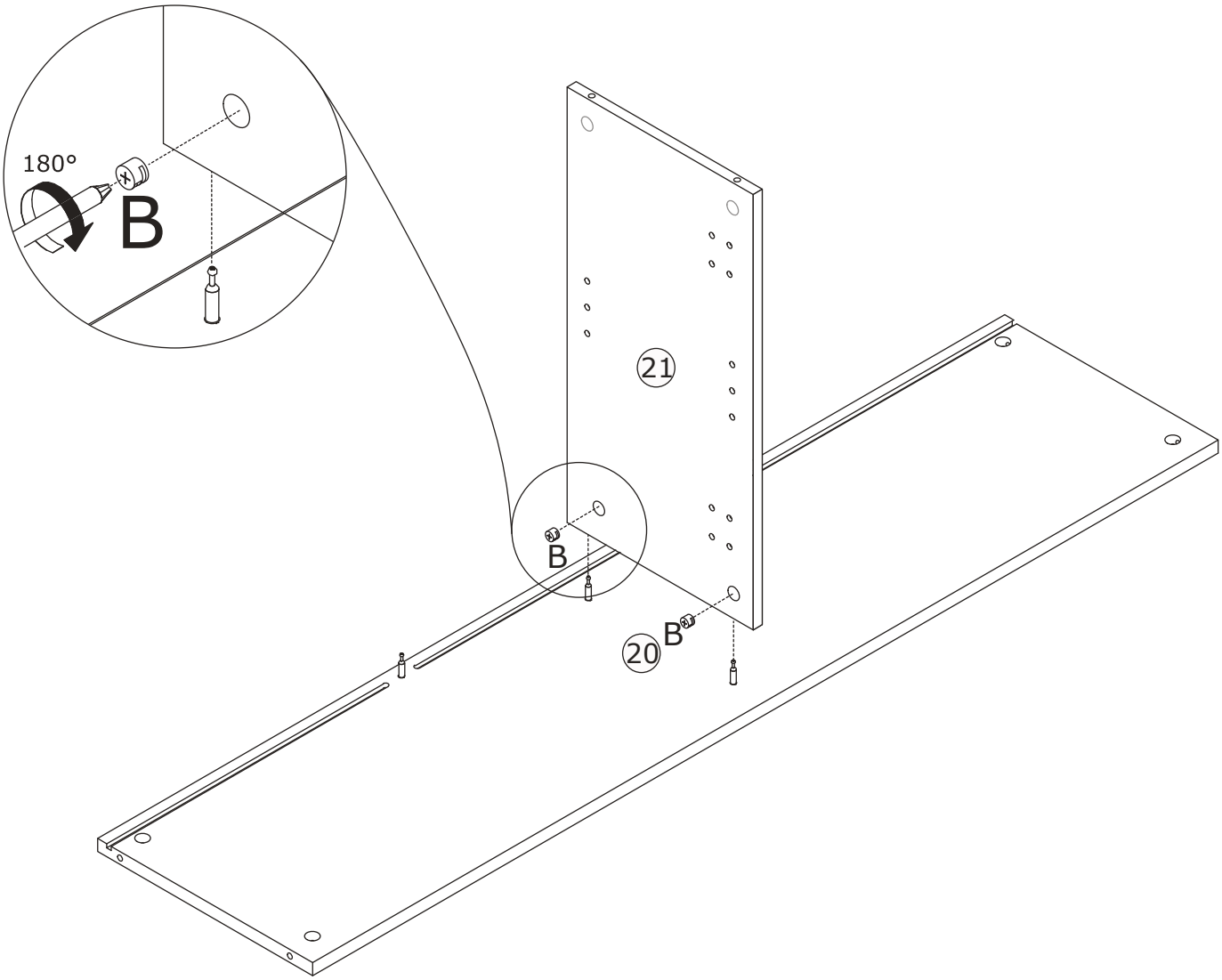

29

B x 2

∅9.5 x 15 mm

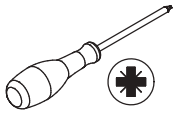

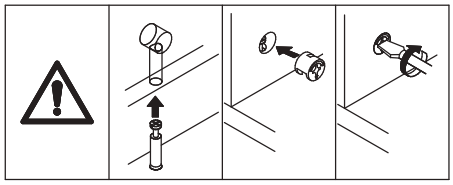

Attach and secure plate 28 to plate 20 with screws (B) as shown.

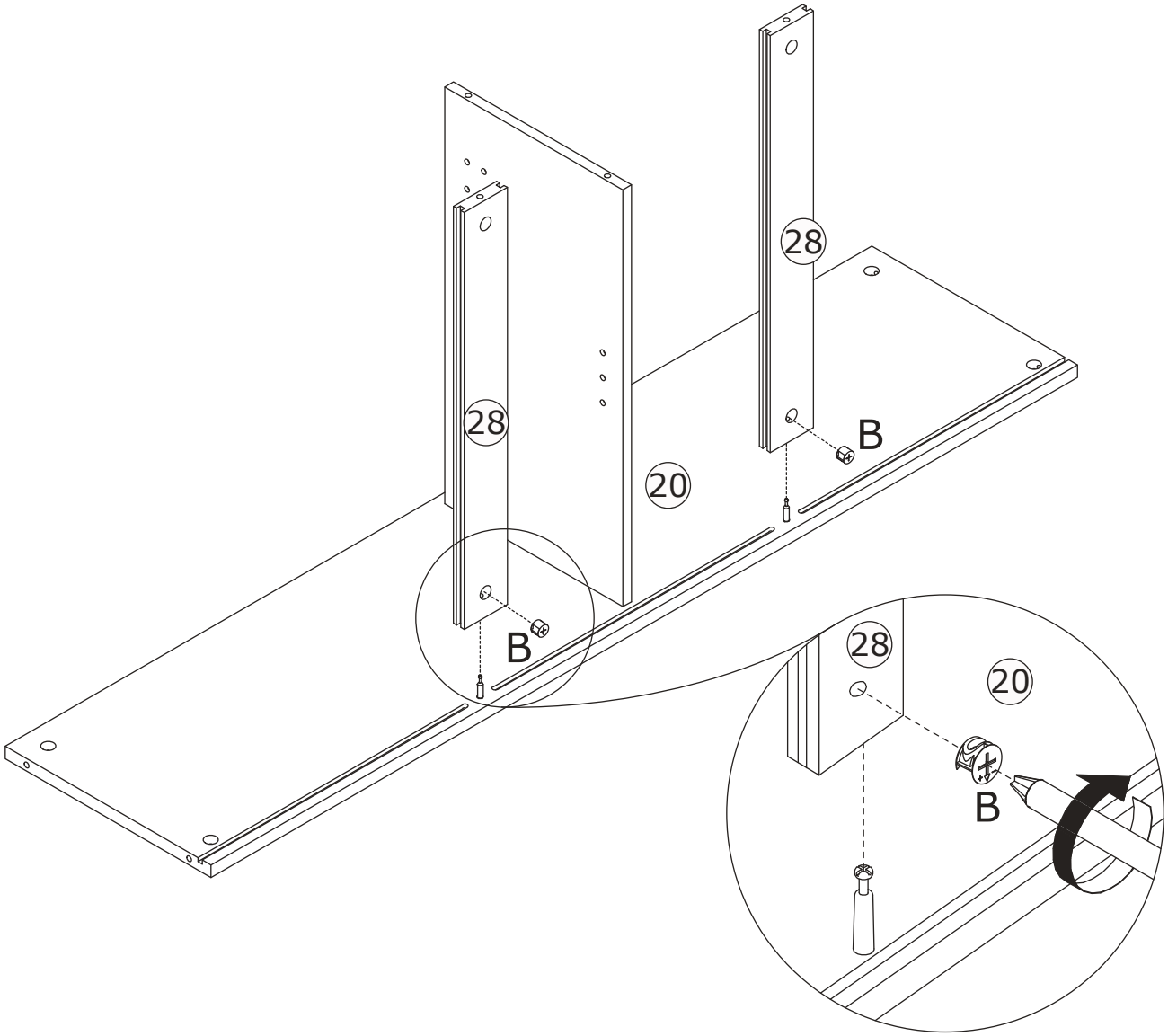

30

Place plate 27 into the groove as shown.

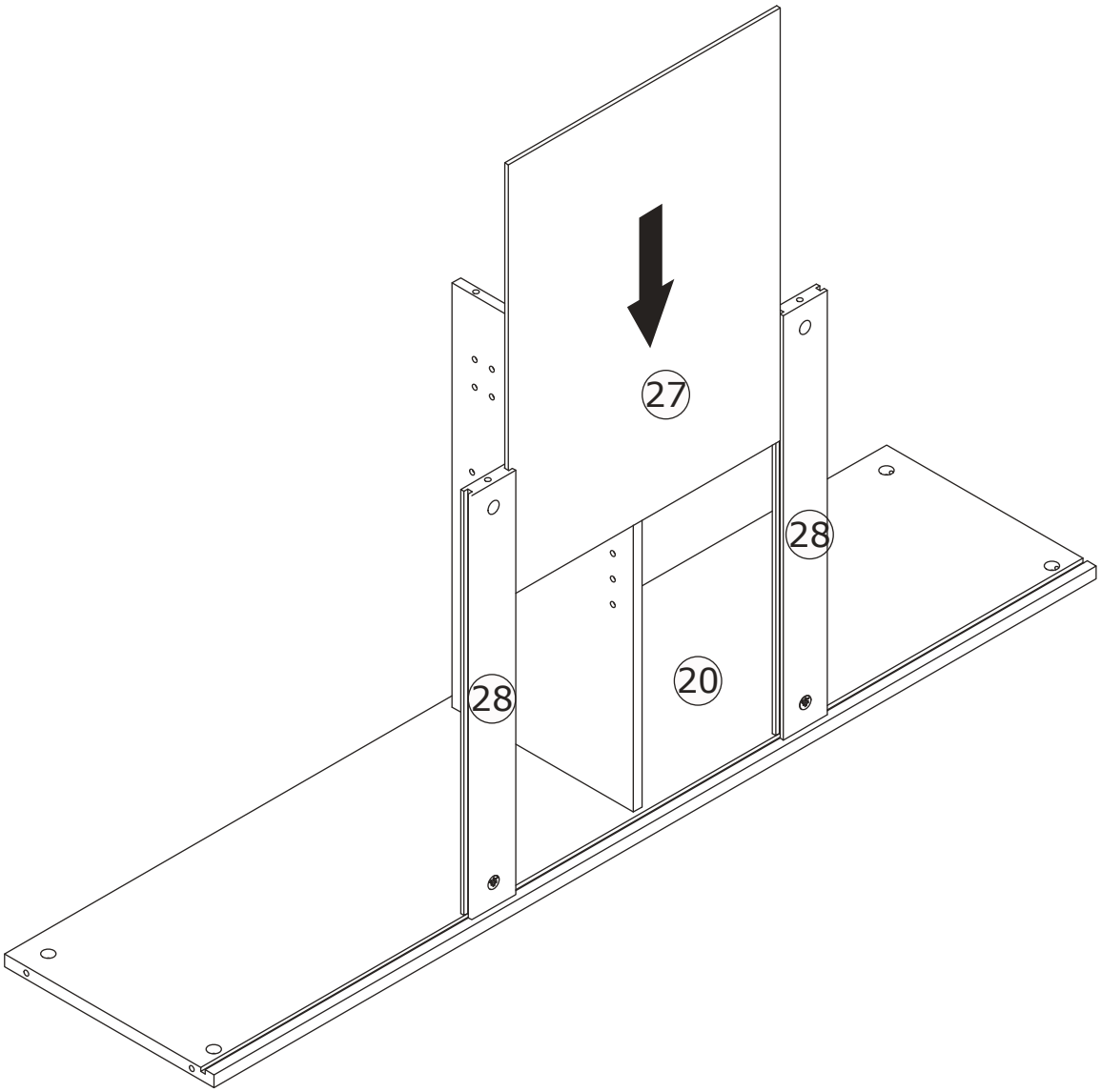

31

B x 4

∅9.5 x 15 mm

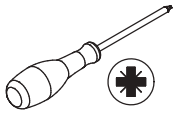

Connect plate 19 to the assembled section and secure with screws (B) as shown.

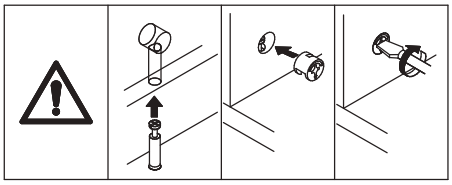

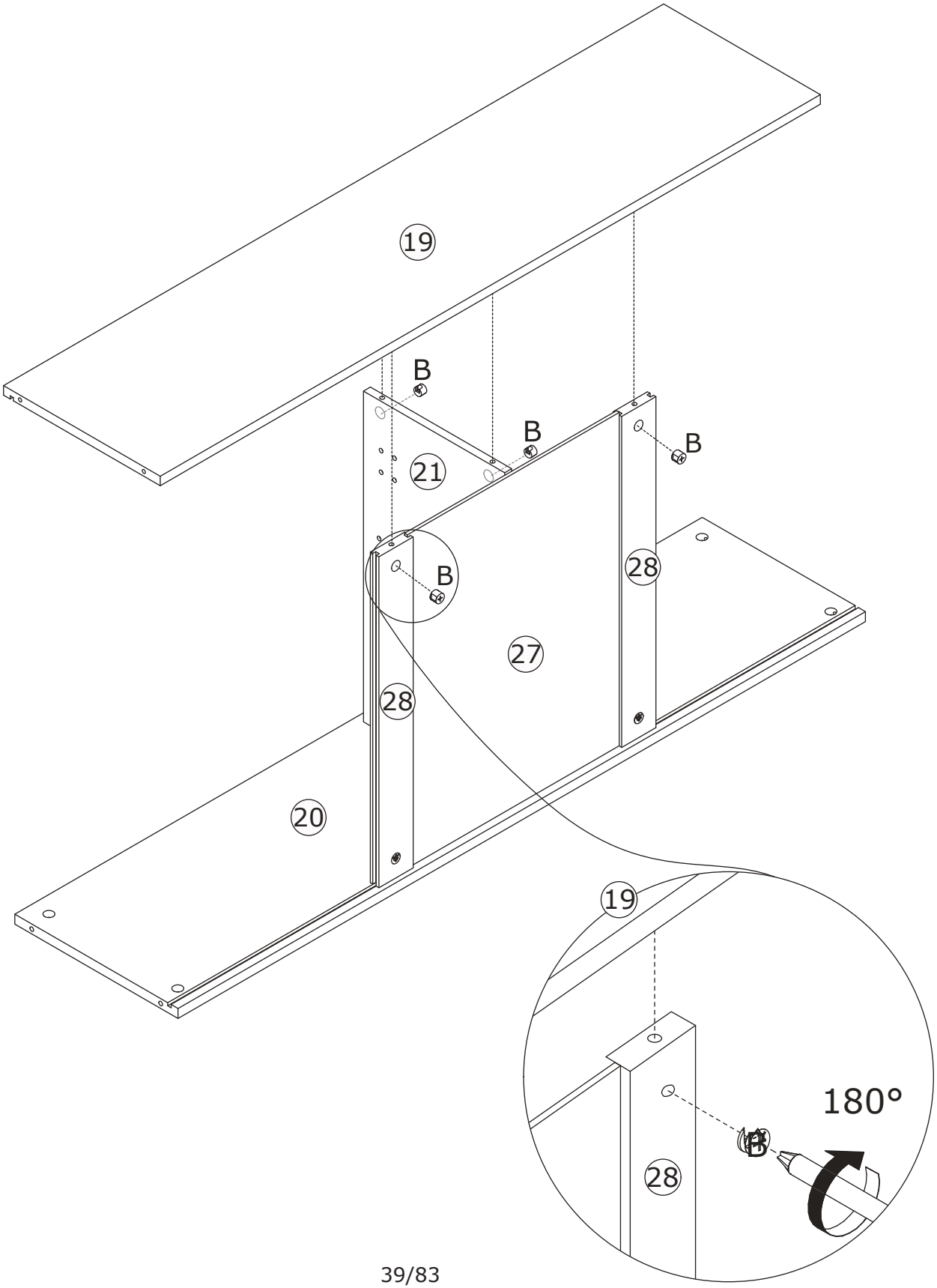

32

Place plate 27 into the recess as shown.

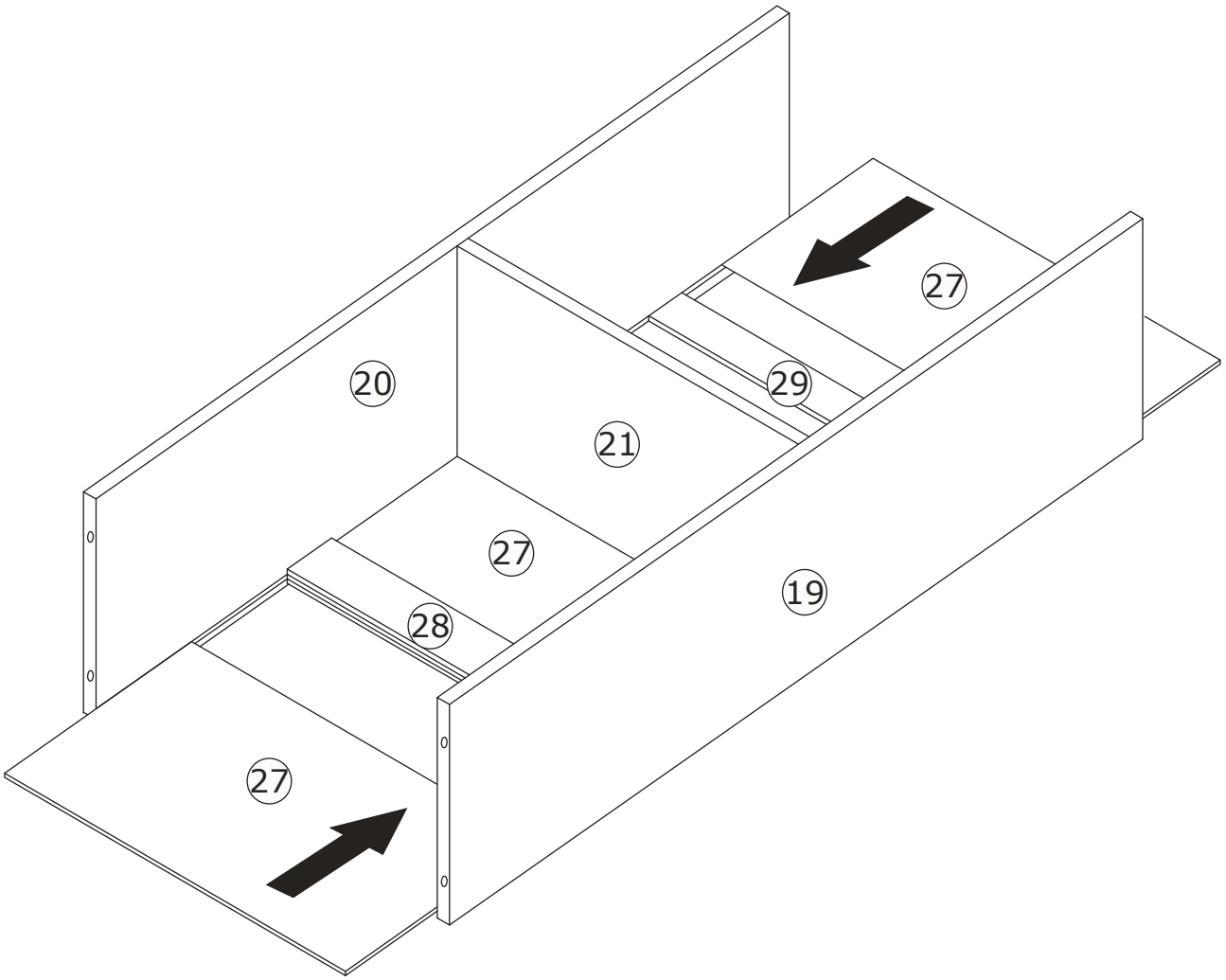

33

B x 4

∅9.5 x 15 mm

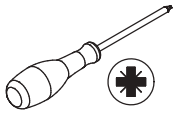

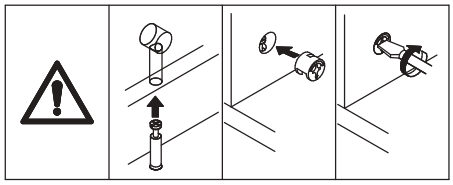

Attach plate 29 to plate 20 and secure with fitting (B) as shown.

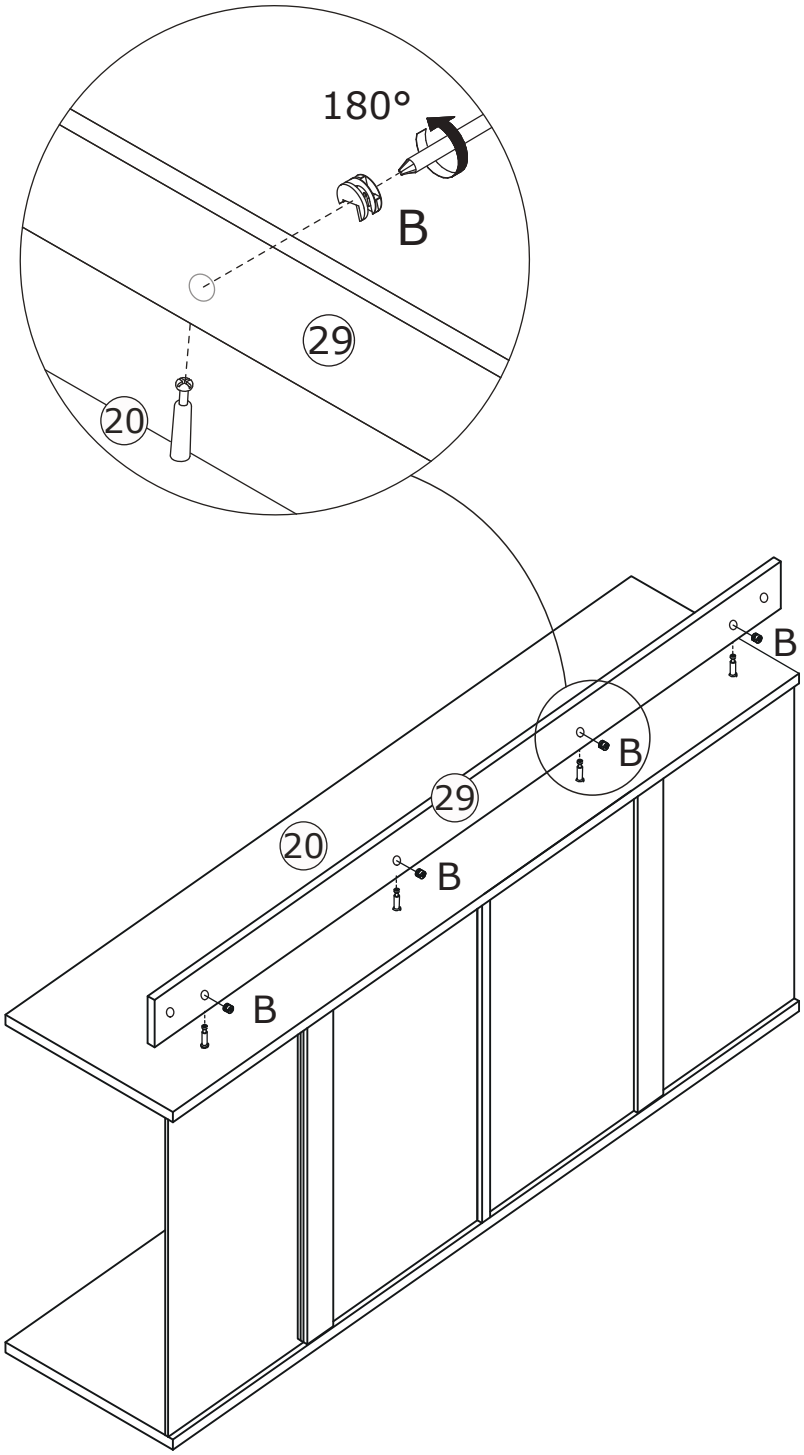

34

A x 16

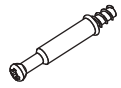

∅6 x 35 mm

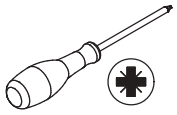

Attach accessory (A) to board 3 as shown.

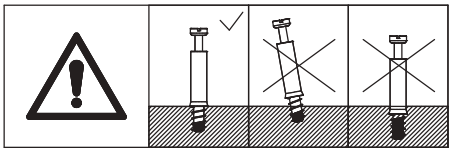

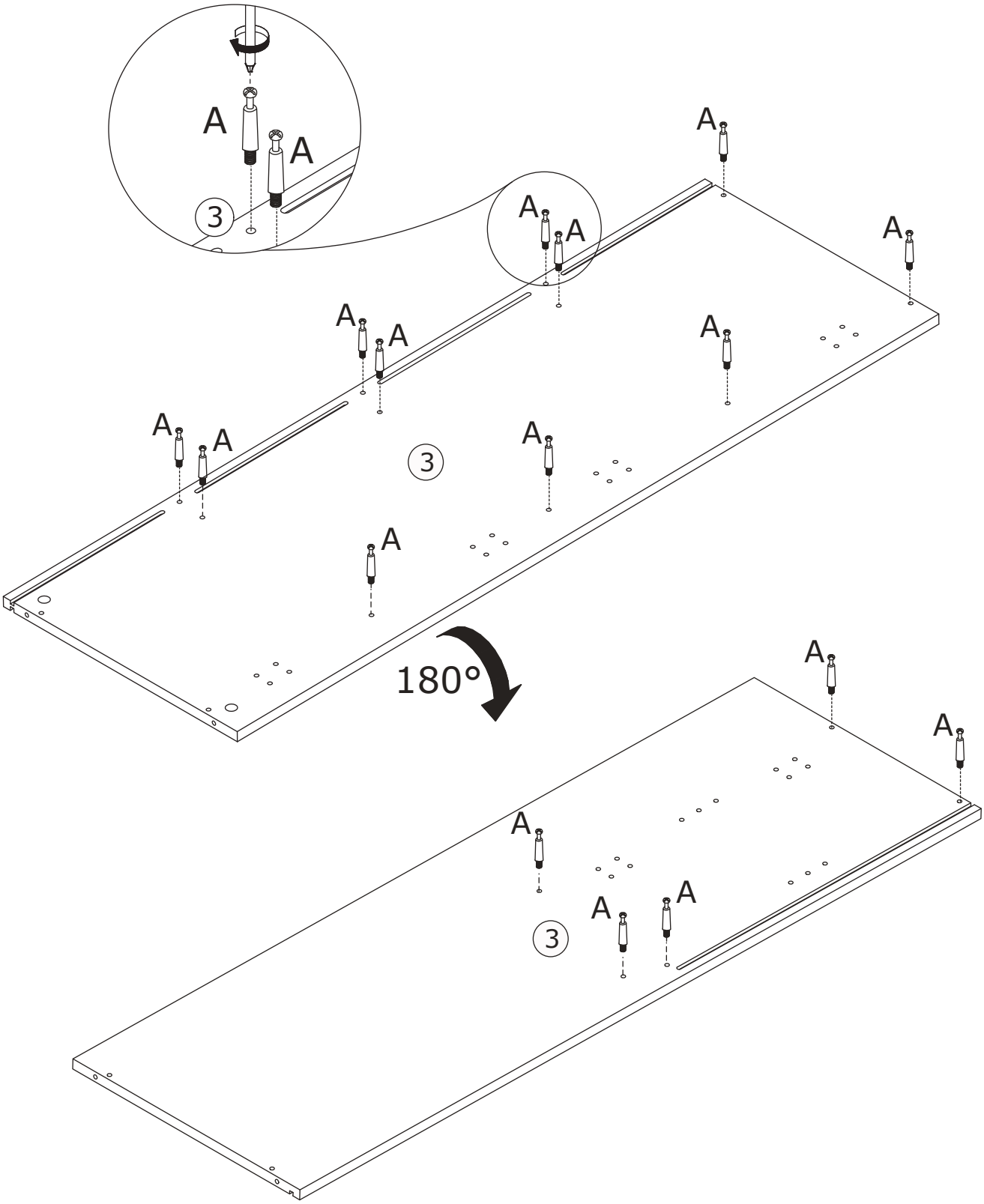

35

A x 16

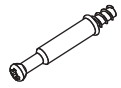

∅6 x 35 mm

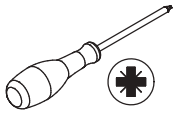

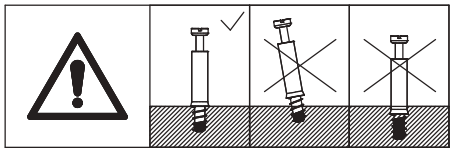

Attach accessory (A) to board 4 as shown.

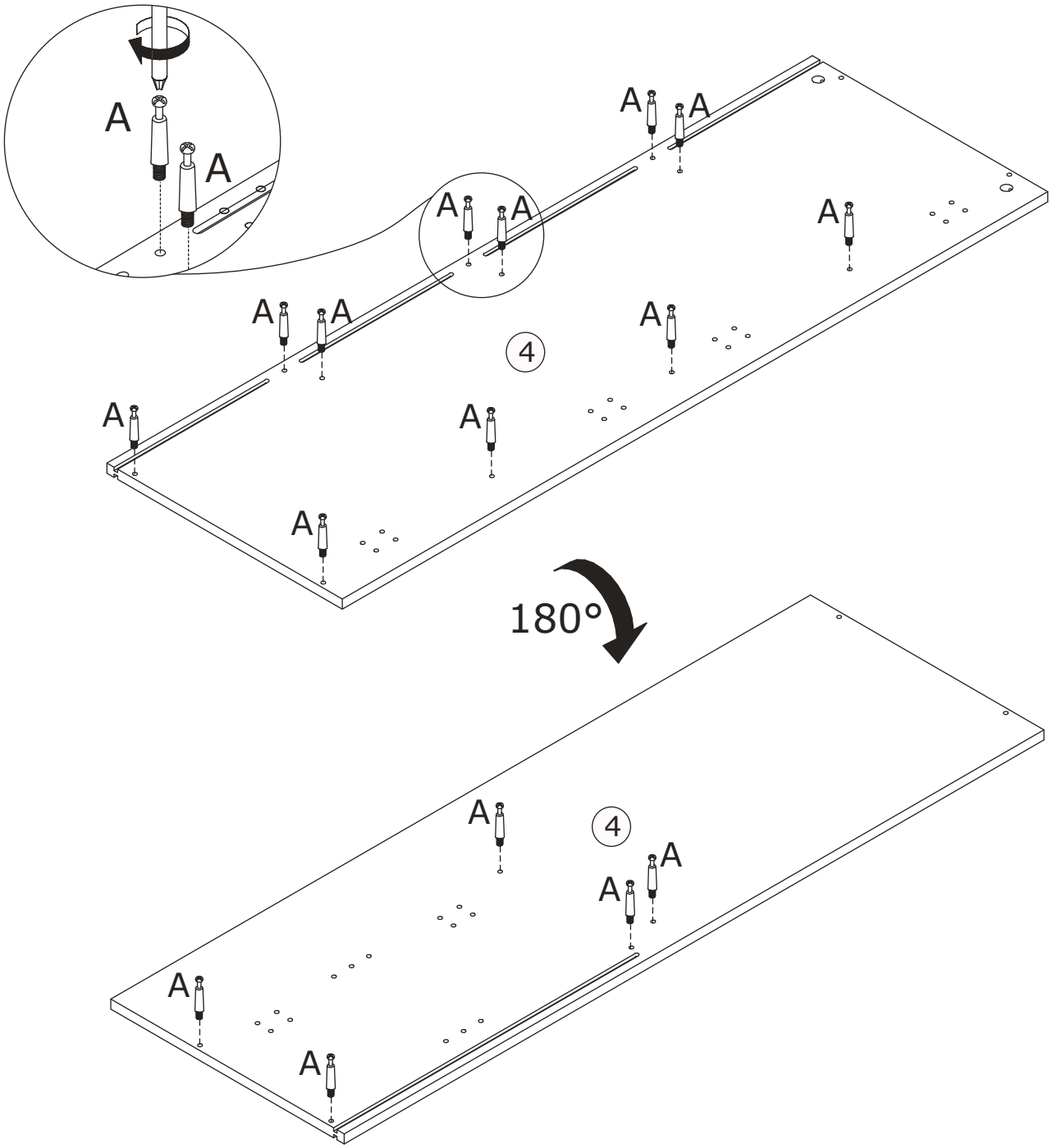

36

B x 5

∅9.5 x 15 mm

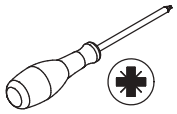

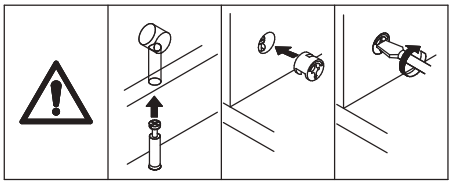

Attach board 3 to boards 19, 20, 29 and secure with fittings (B) as shown.

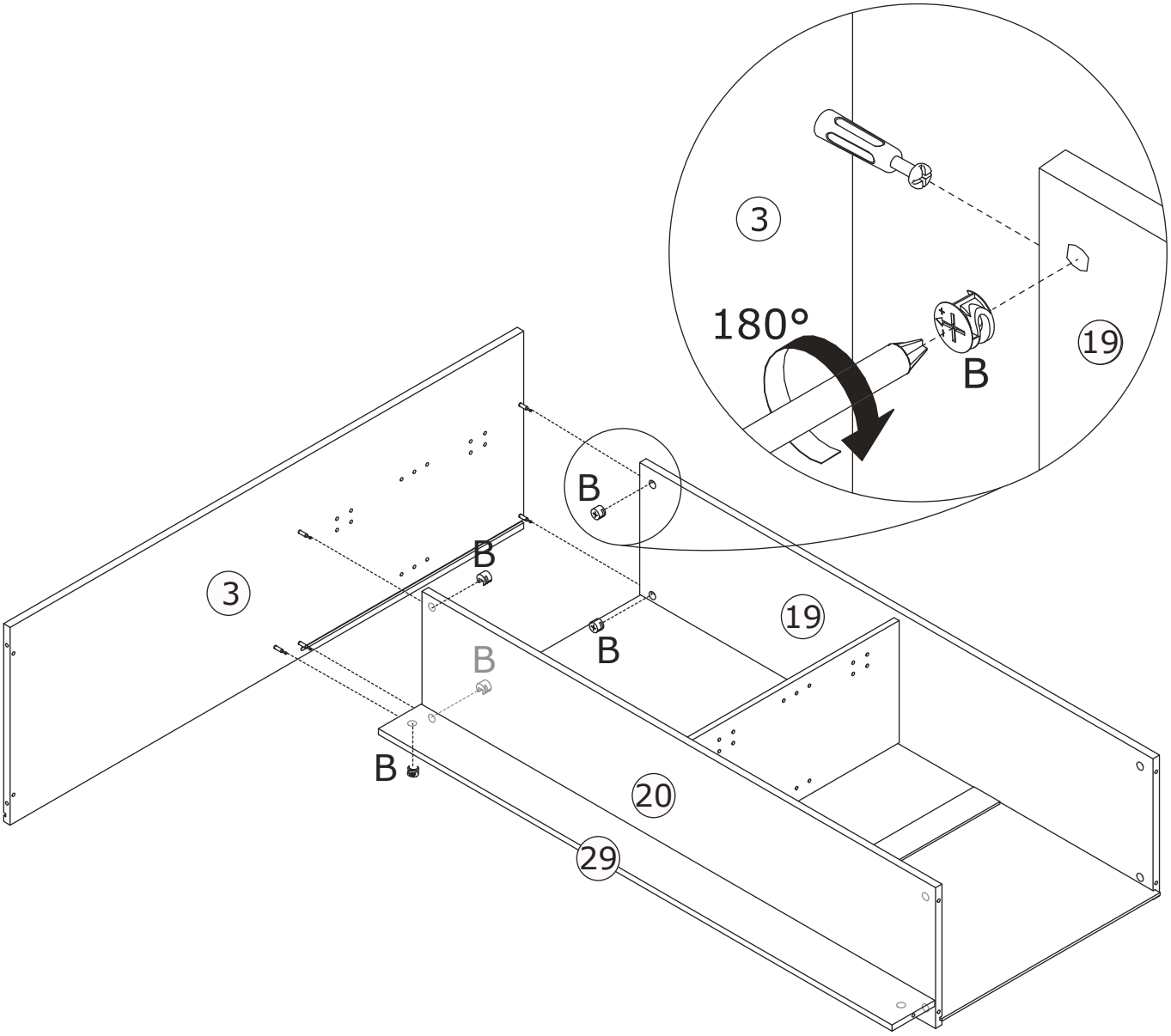

37

B x 5

∅9.5 x 15 mm

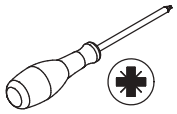

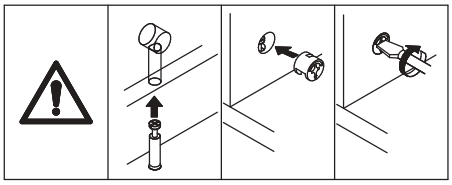

Attach board 4 to boards 19, 20, 29 and secure with fittings (B) as shown.

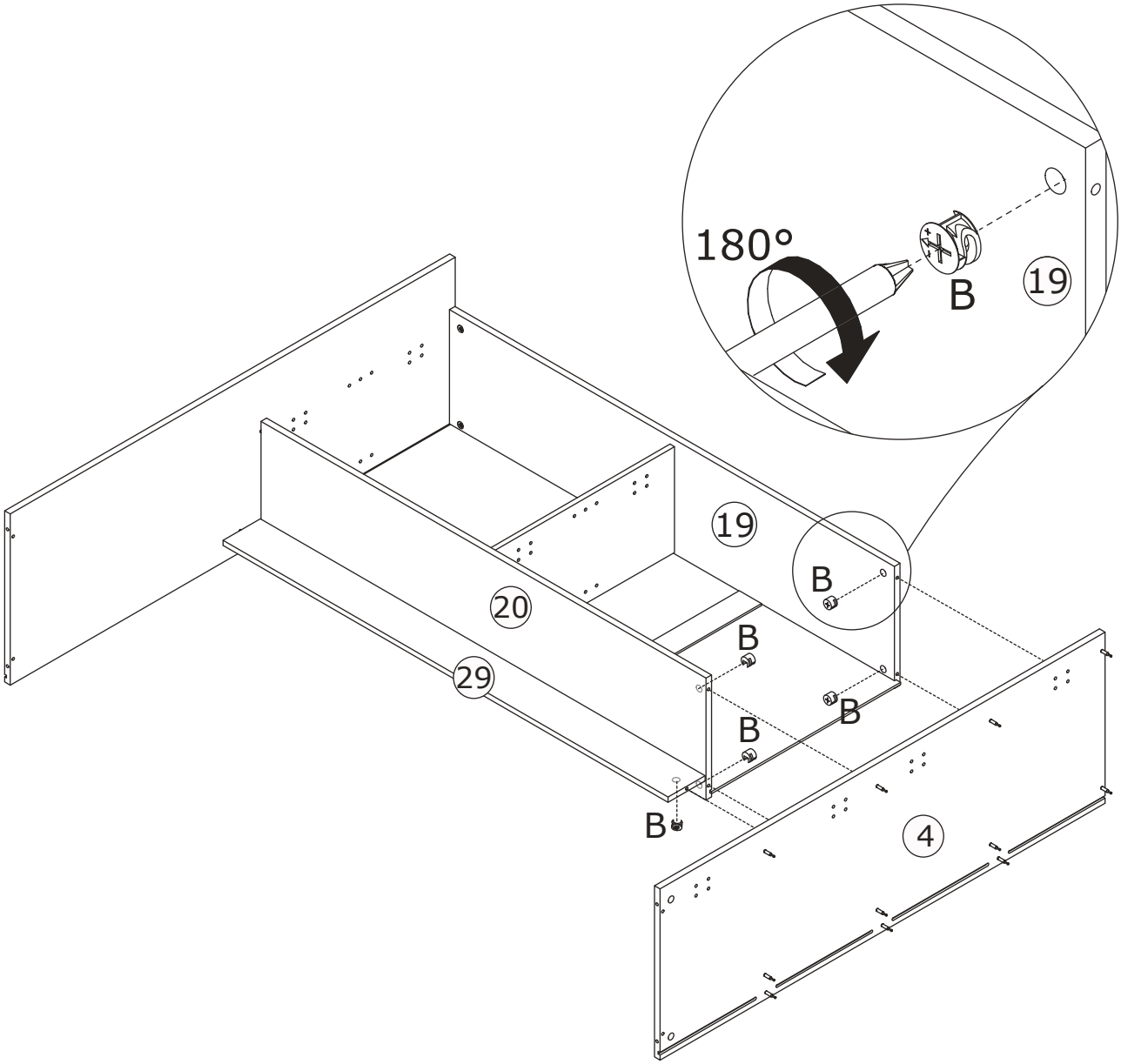

38

B x 4

∅9.5 x 15 mm

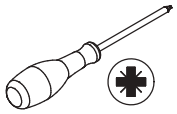

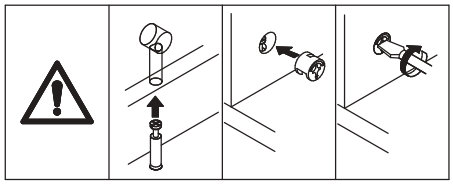

Connect boards 3, 4 to boards 7, 53 and secure with fittings (B) as shown.

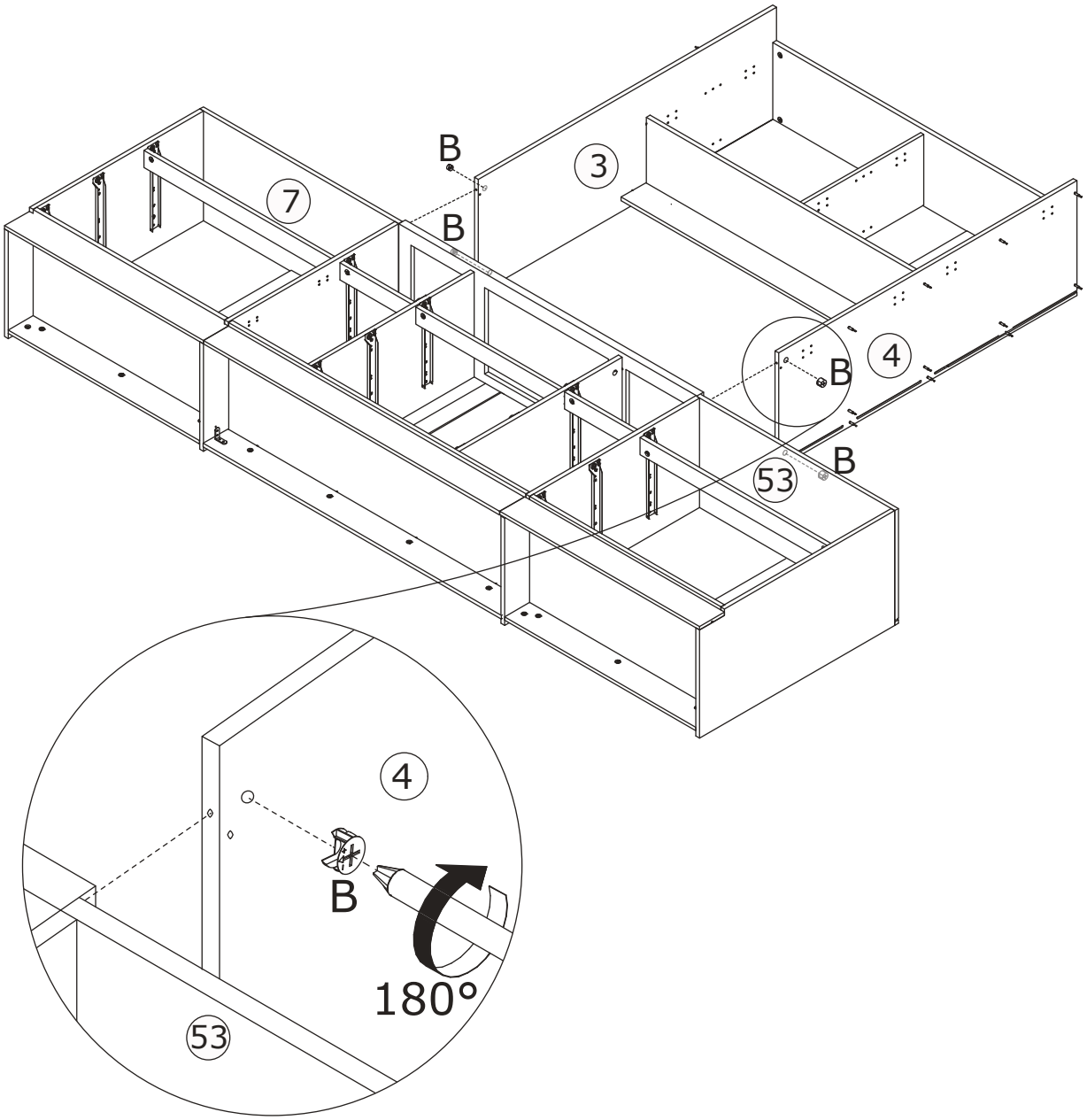

39

Q x 4

∅3 x 40 mm

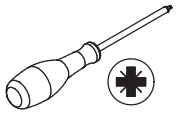

Connect boards 3 and 4 to board 23 and secure with fitting (Q) as shown.

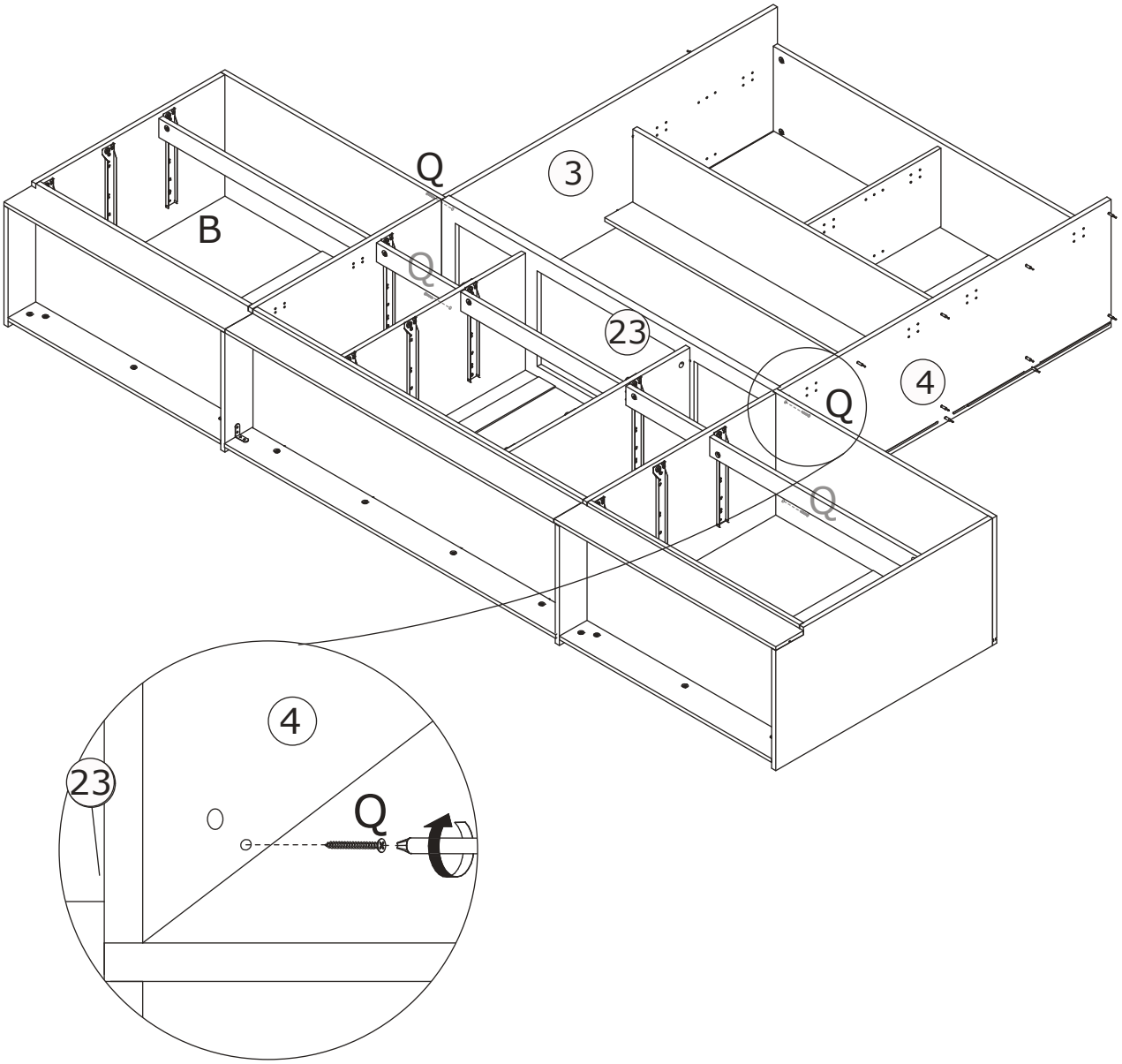

40

B x 3

∅9.5 x 15 mm

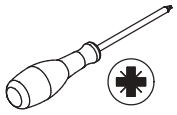

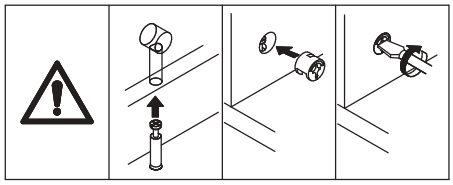

Install and secure plates 17, 16 in sequence from bottom to top with fittings (B) as shown.

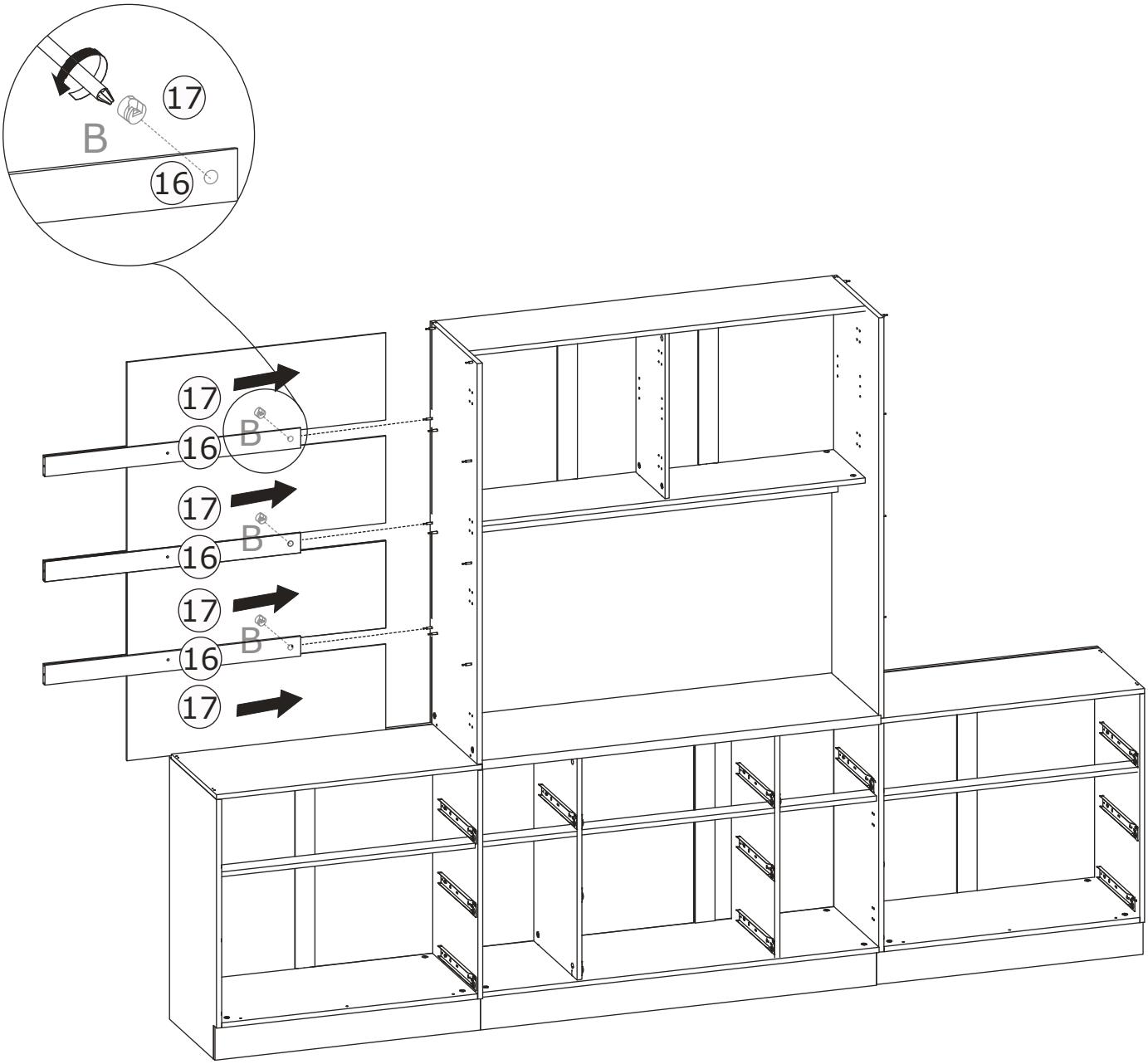

41

B x 3

∅9.5 x 15 mm

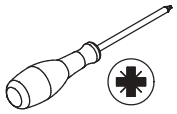

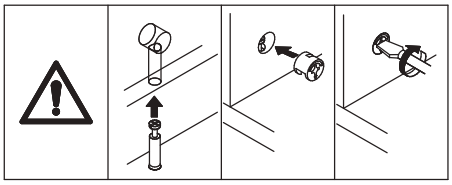

Install plates 17, 16 in sequence from bottom to top and secure with fittings (B) as shown.

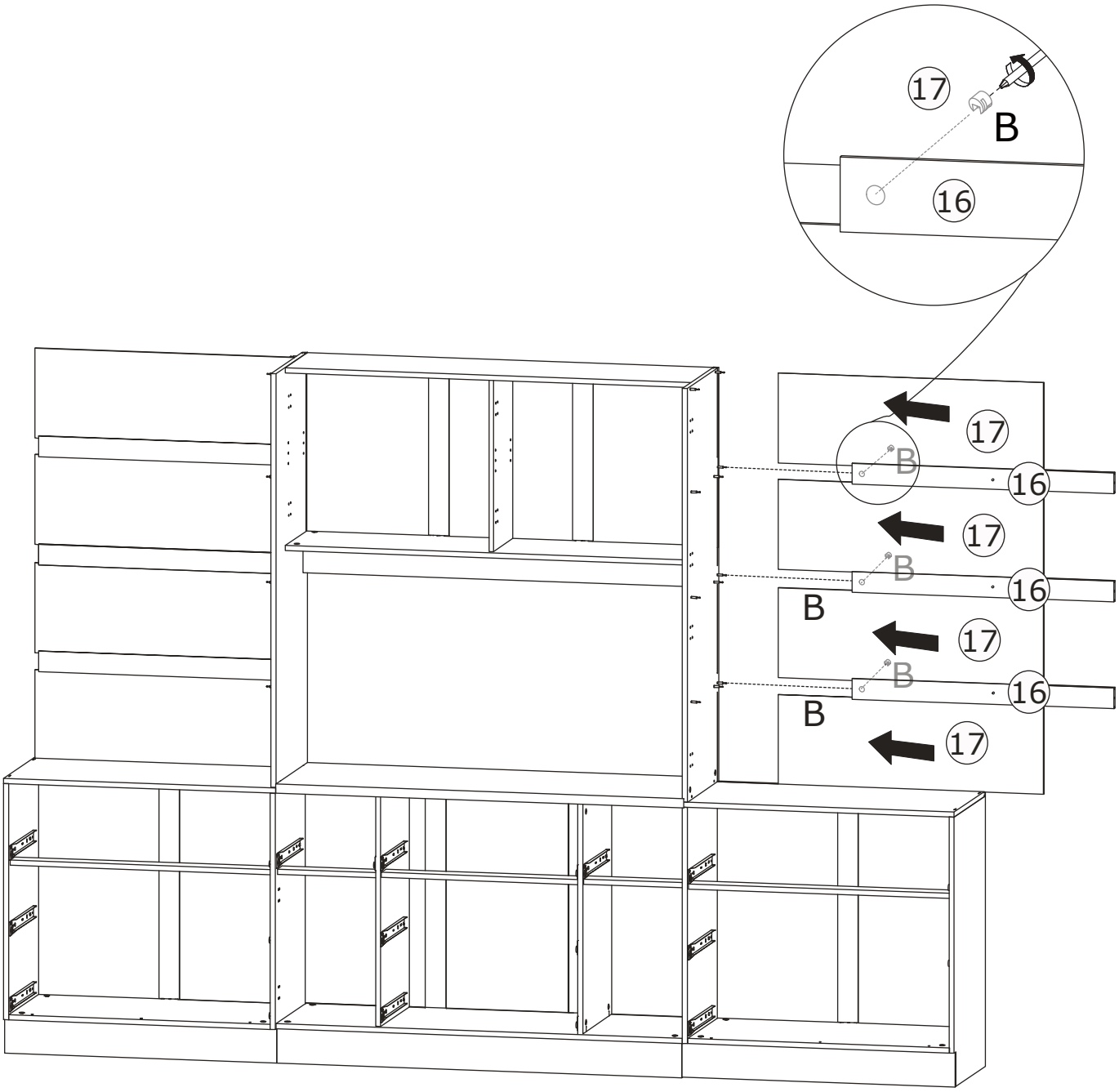

42

B x 6	P x 3	
∅9.5 x 15 mm	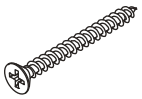 ∅3 x 30 mm	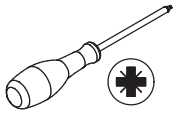

Connect board 6 to board 3 first and secure with fitting (B), then connect board 16 to board 6 and secure with fitting (P) as shown.

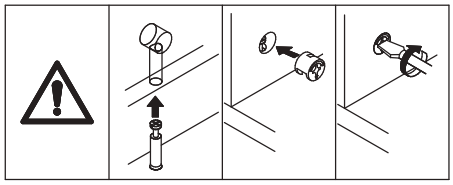

Be careful to install the screws (P) by resting your hand on plate 6 when installing plate 6 and install them one by one in the order from the bottom to the top.

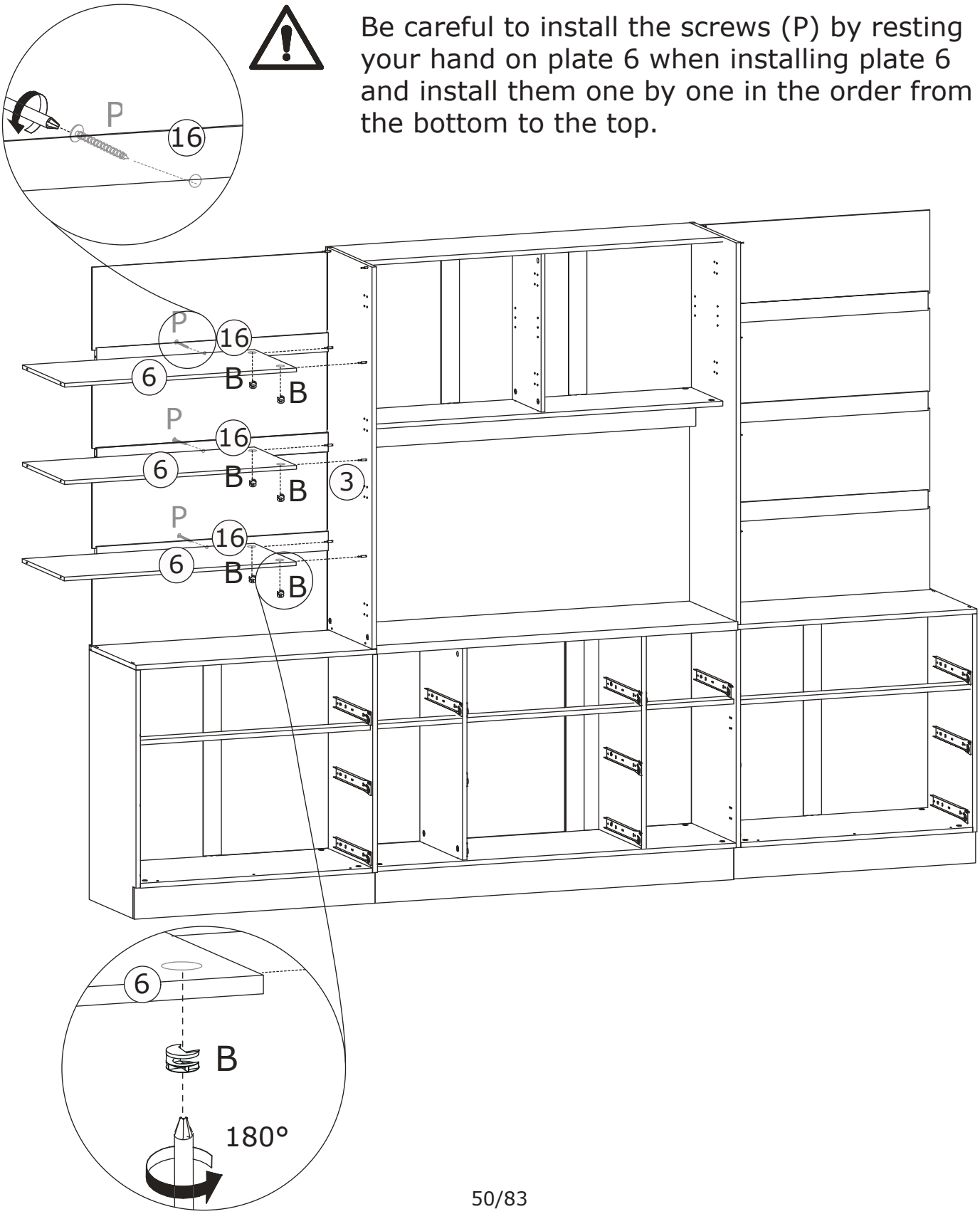

43

B x 6	P x 3	
∅9.5 x 15 mm	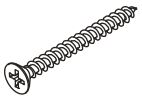 ∅3 x 30 mm	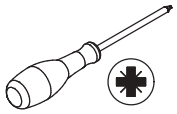

Connect board 6 to board 4 first and secure with fitting (B), then connect board 16 to board 6 and secure with fitting (P) as shown.

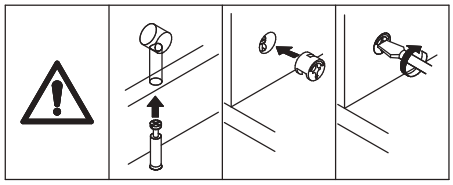

Be careful to install the screws (P) by resting your hand on plate 6 when installing plate 6 and install them one by one in the order from the bottom to the top.

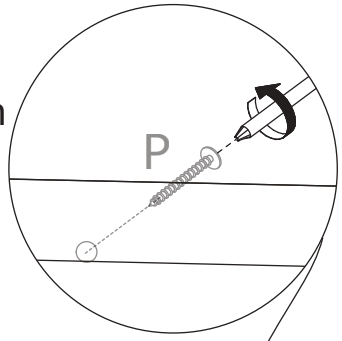

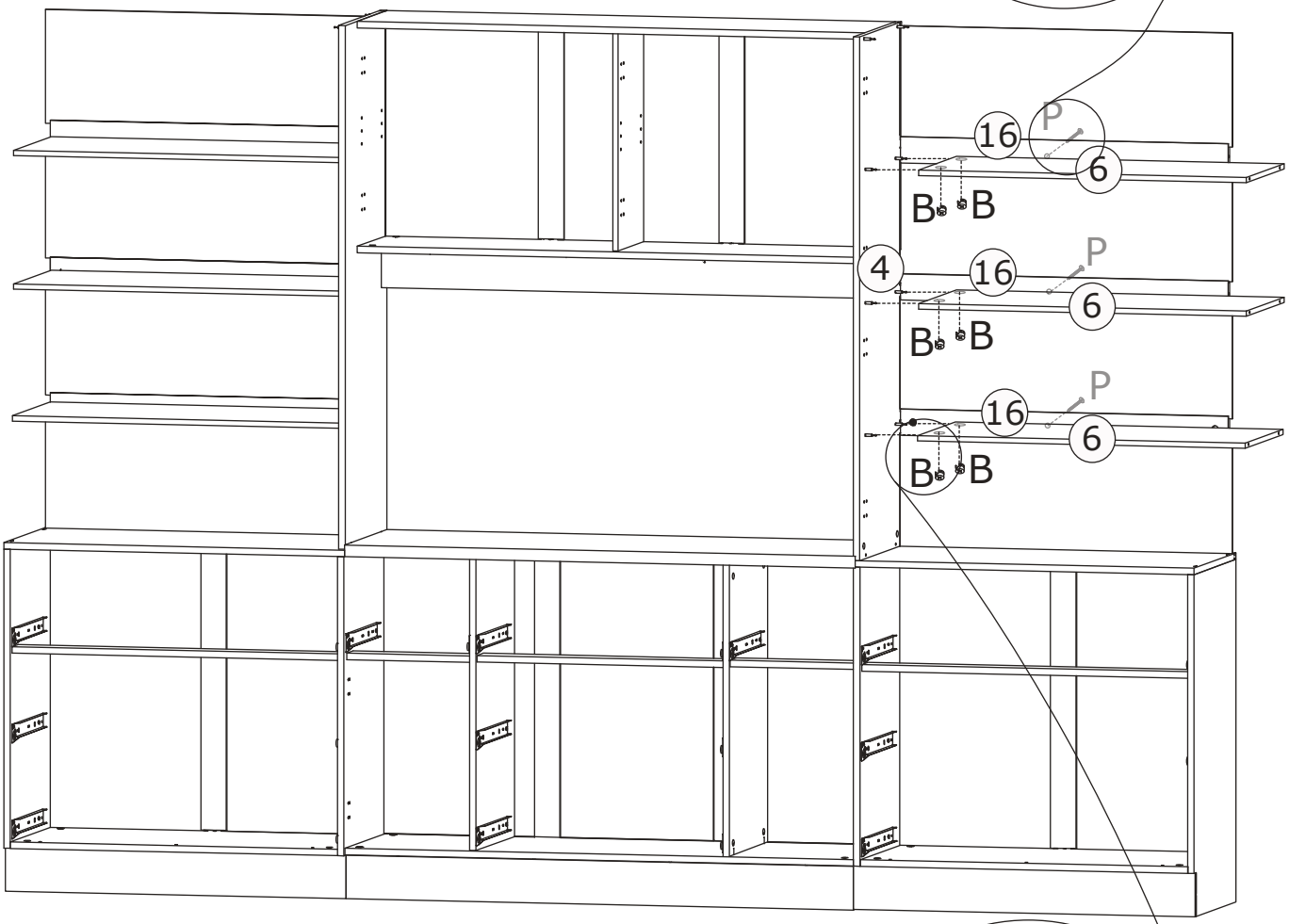

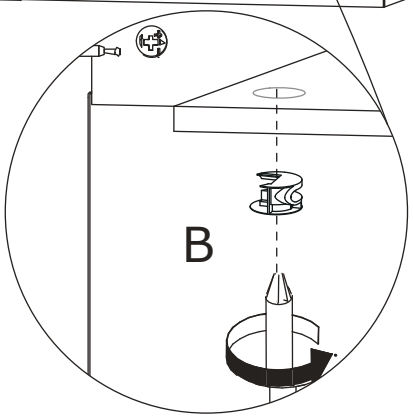

44

B x 4

∅9.5 x 15 mm

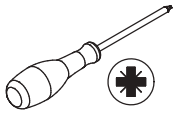

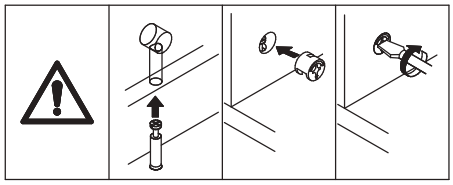

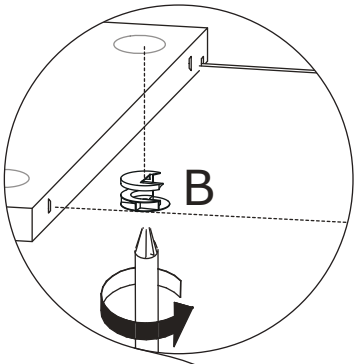

Attach board 1 to boards 3 and 4 respectively and secure using fitting (B) as shown.

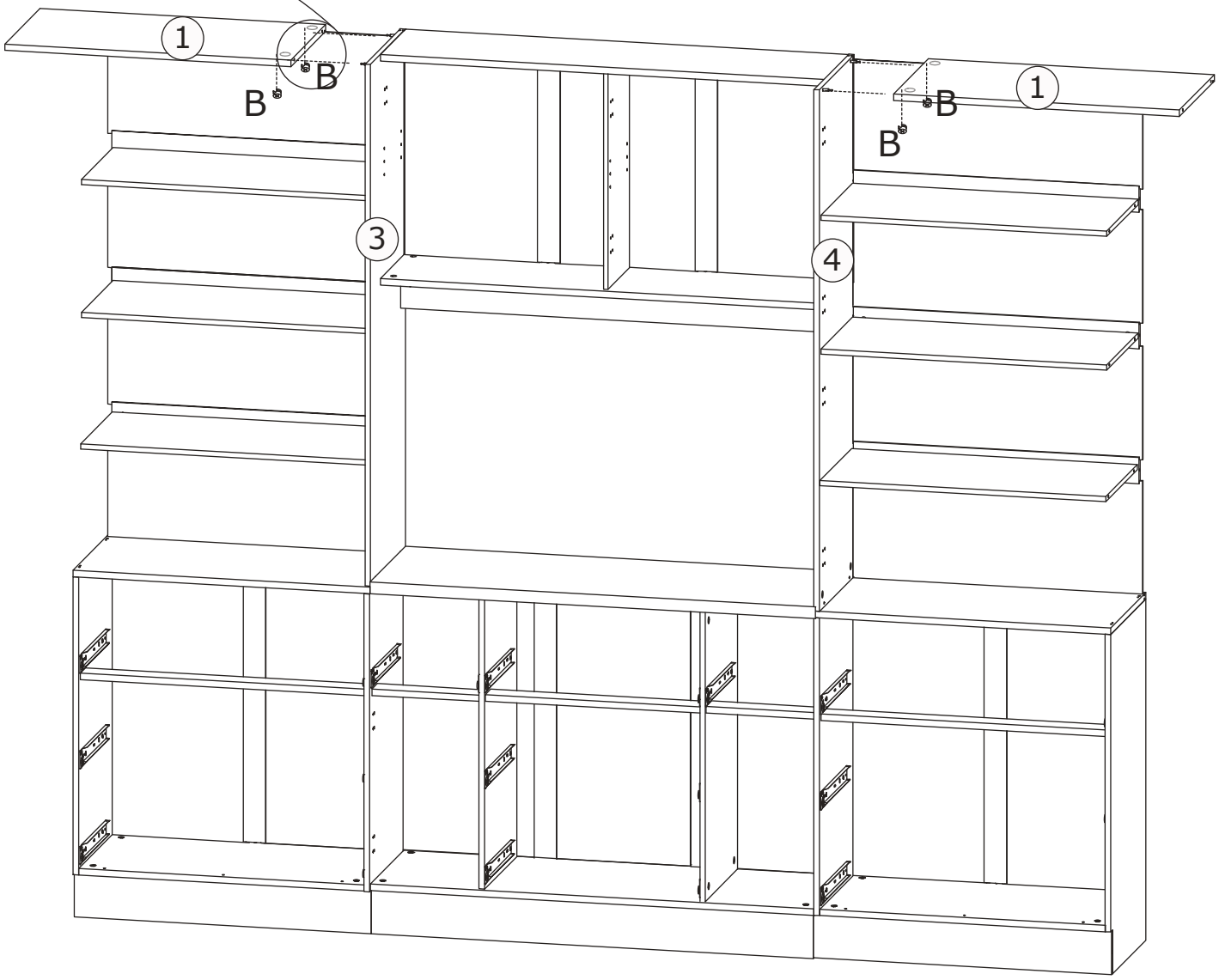

45

A x 11

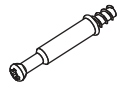

∅6 x 35 mm

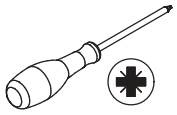

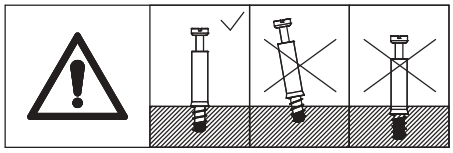

Attach fitting (A) to plate 2 as shown.

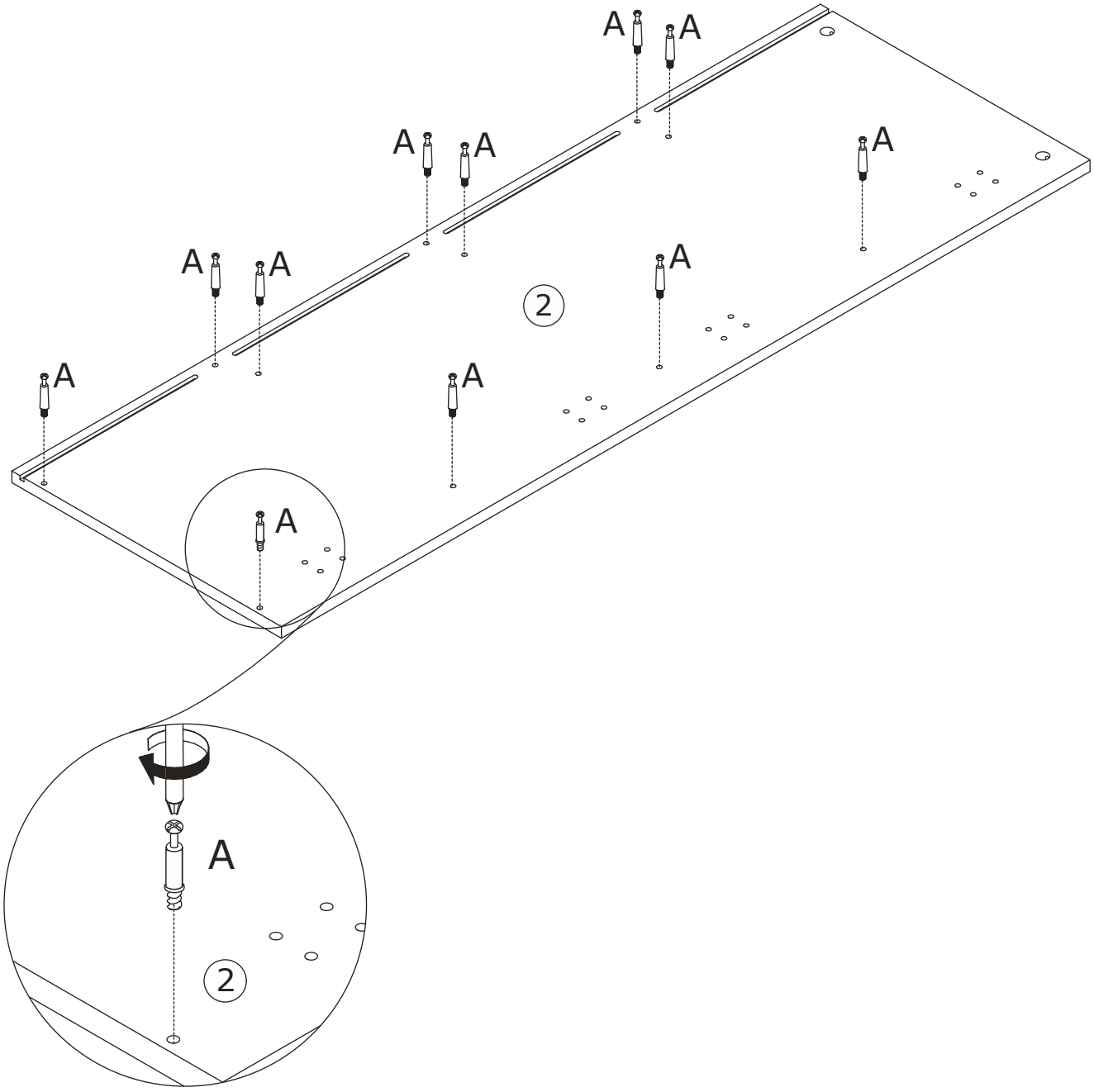

46

A x 11

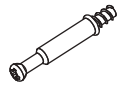

∅6 x 35 mm

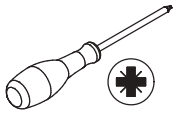

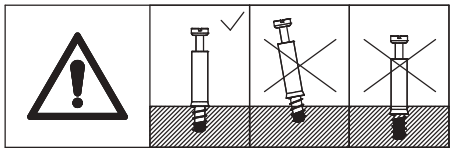

Attach fitting (A) to plate 5 as shown.

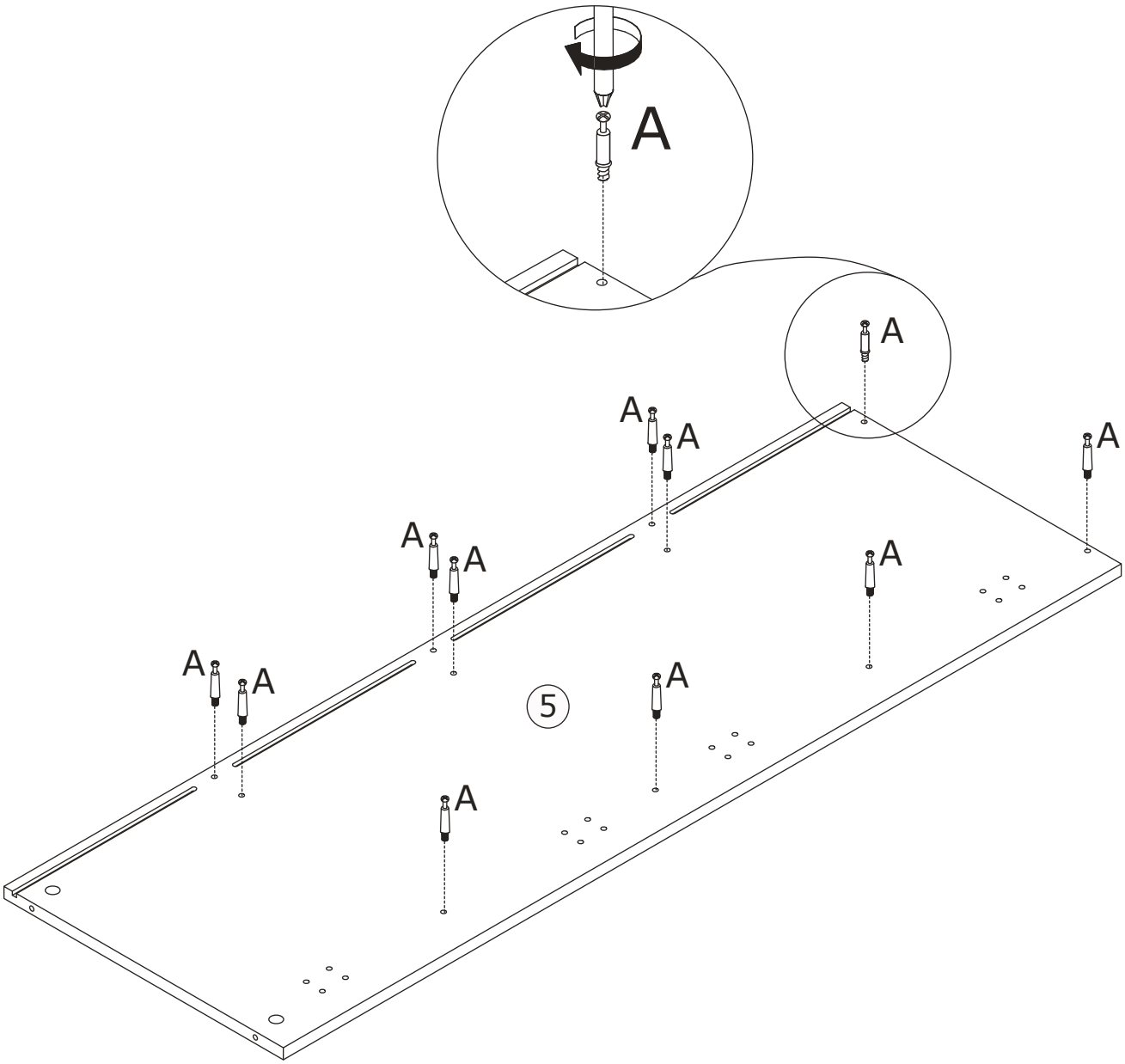

47

B x 26

∅9.5 x 15 mm

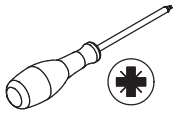

Connect plates 2, 5 to plates 1, 6, 16 and secure using (B) as shown.

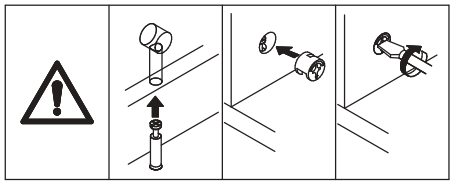

Firstly, insert plate 1 into the hole, then insert plates 2, 3, 4 and 5 in turn into the hole, and finally lock the card lock (B).

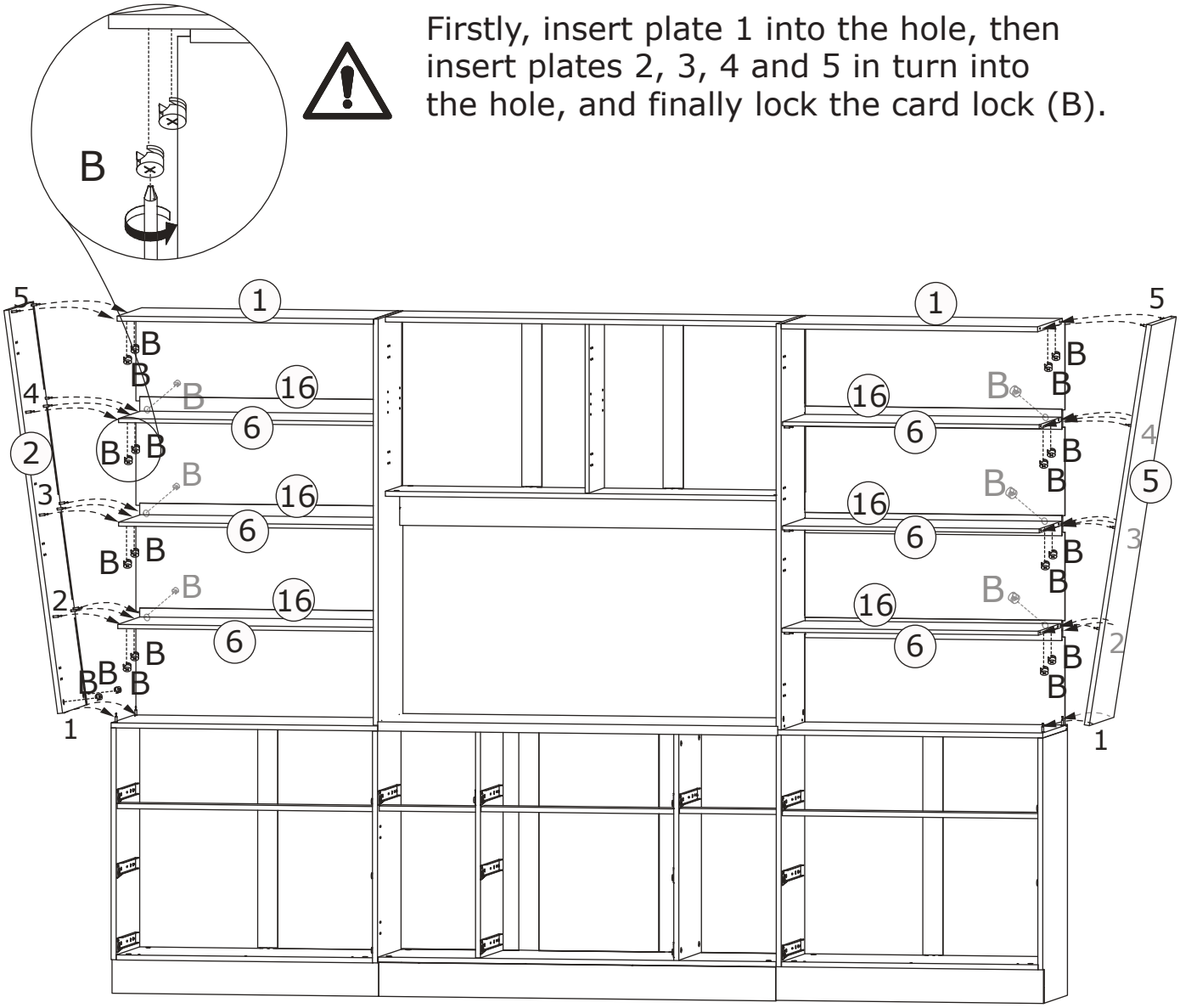

48

N x 8

Place the fitting (N) in the hole then place the plate 22 as shown.

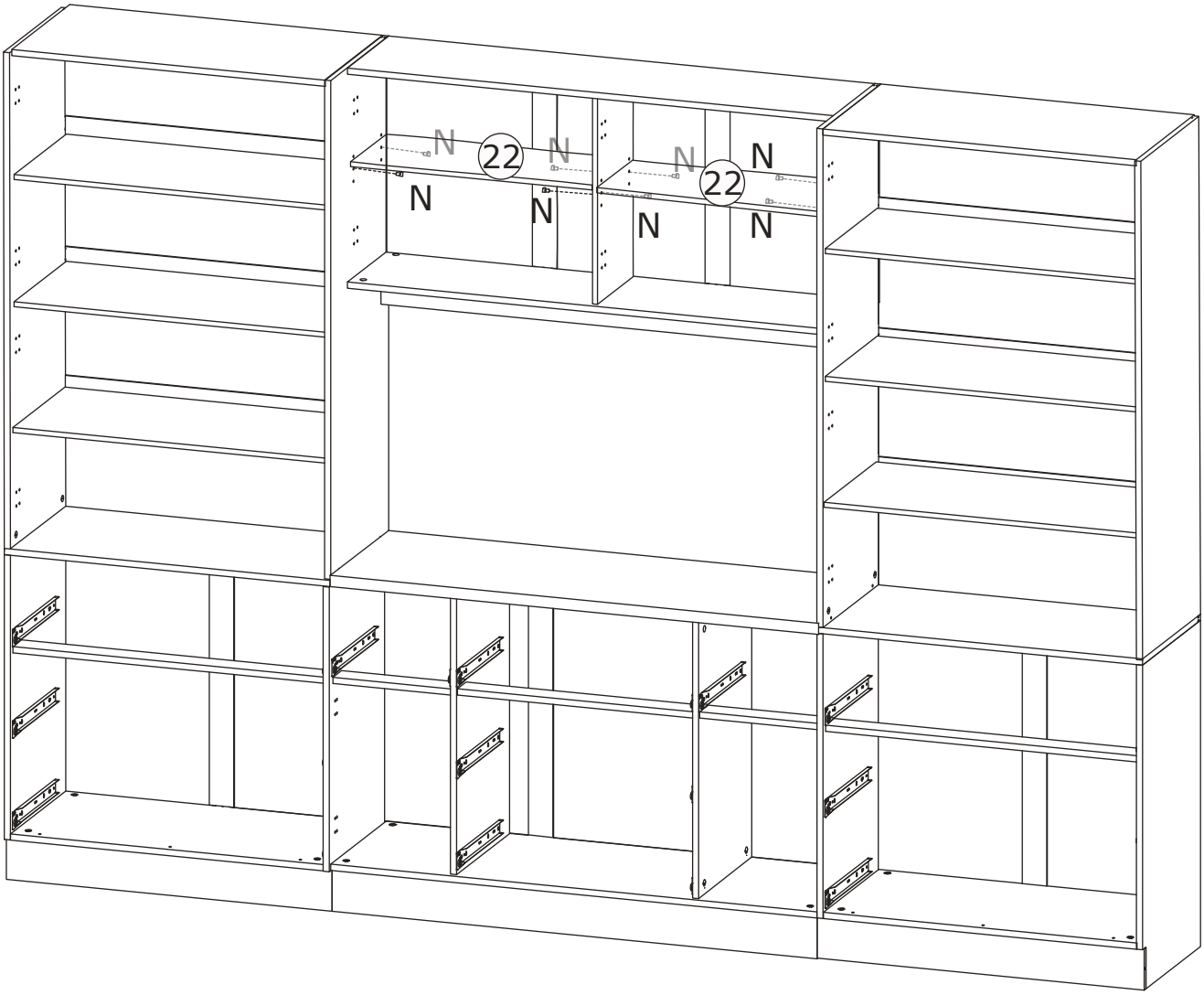

49

A x 30	F x 12	T x 6	
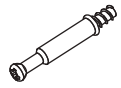 ∅6 x 35 mm	∅4 x 14 mm	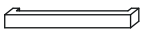	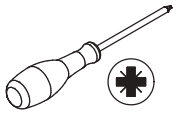

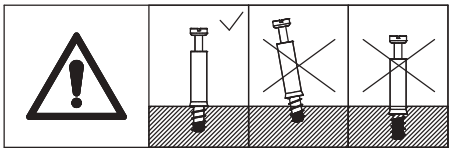

Attach accessory (A) to plate 39 and use accessory (F) to secure accessory (T) to plate 39 as shown.

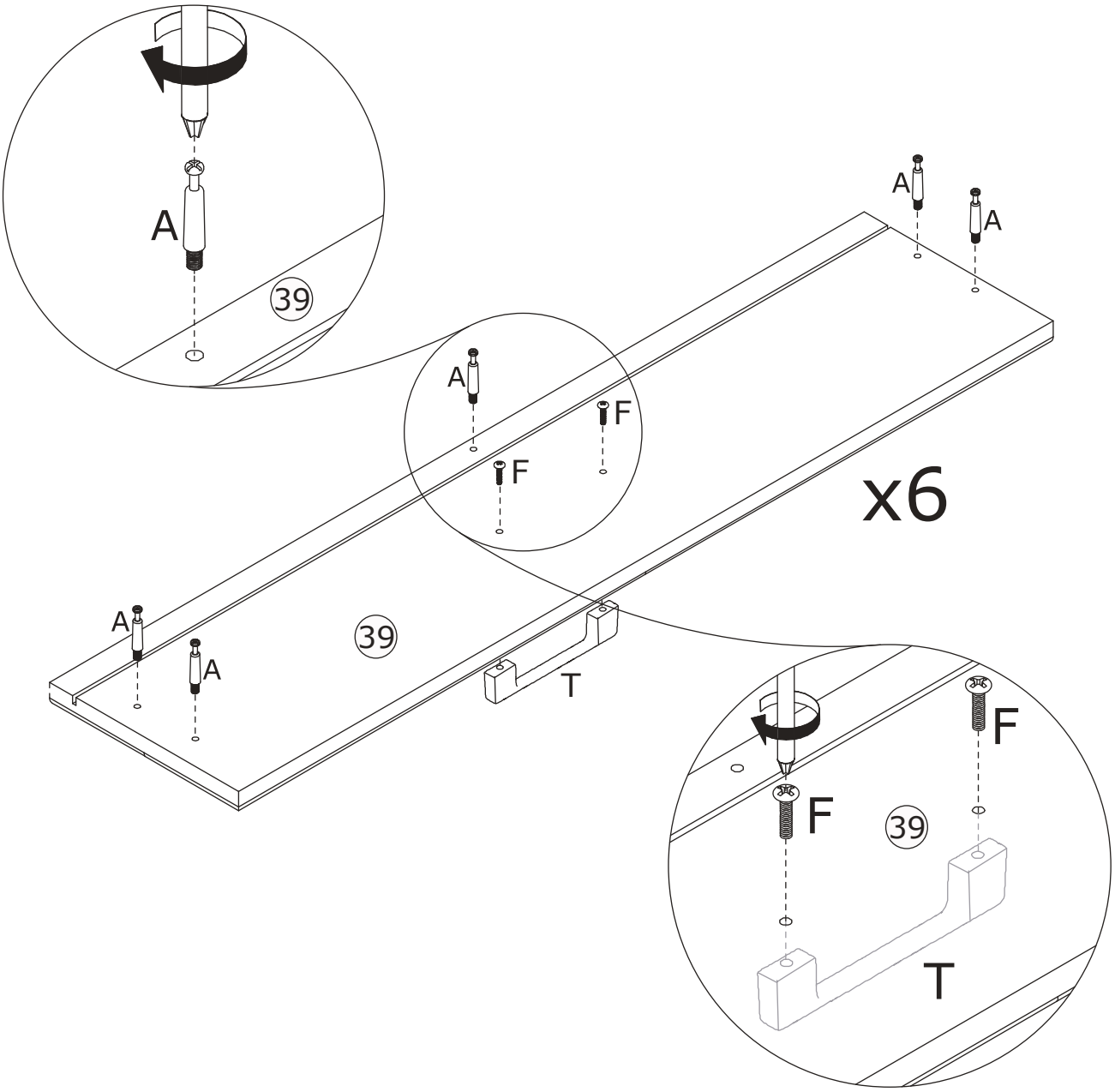

50

P x 30

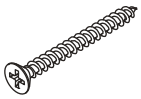

∅3 x 30 mm

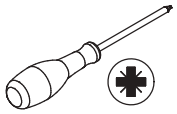

Connect plates 36, 37, and 47 to plate 38 and secure with screws (P) as shown.
Insert plate 40 into the recess as shown.

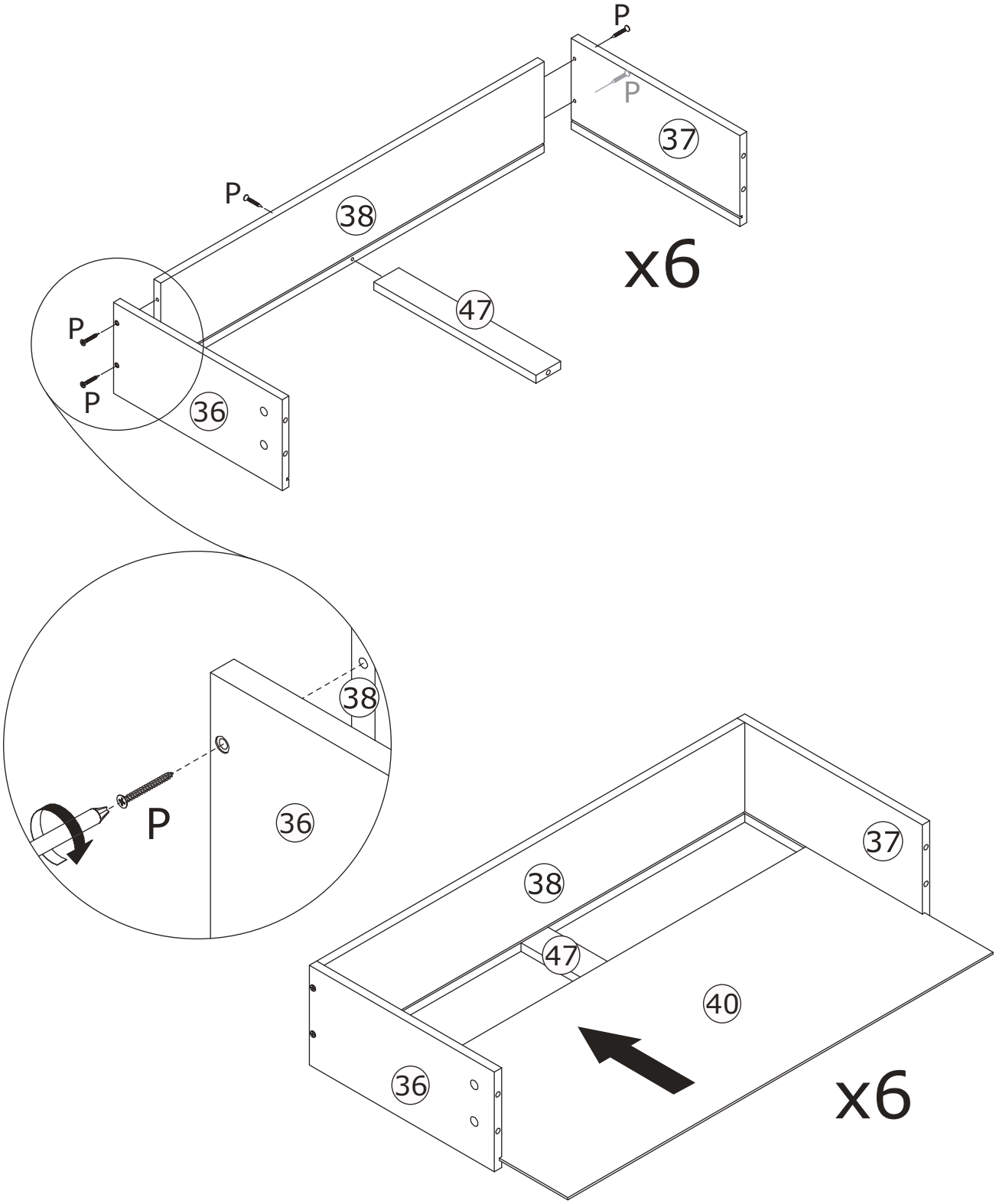

51

B x 30

∅9.5 x 15 mm

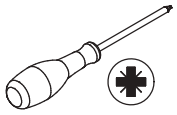

Connect and secure plates 36, 37, 47 and plate 39 with fitting (B) as shown.

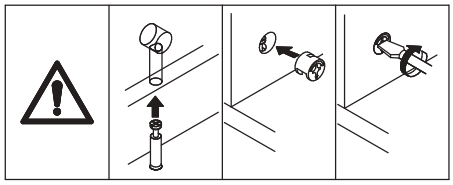

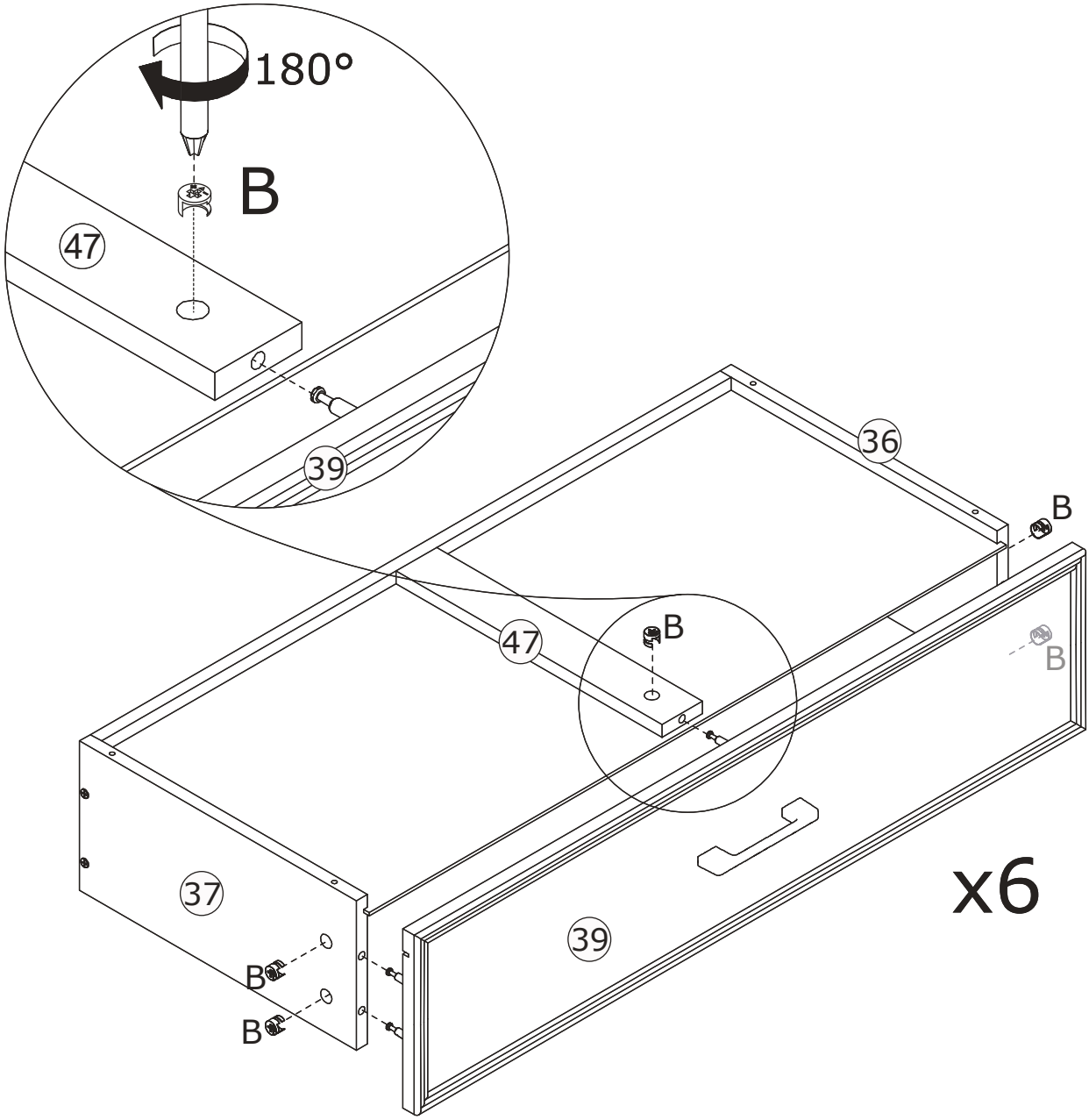

Assemble the screws (B) slower.

52

D x 24	L x 6	Z x 6	
∅3.5 x 12 mm	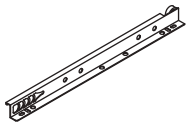	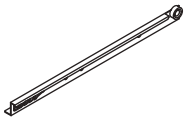	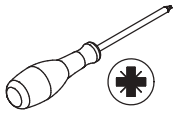

Attach fittings (L) and (Z) to plates 36 and 37, respectively, using fitting (D) as shown.

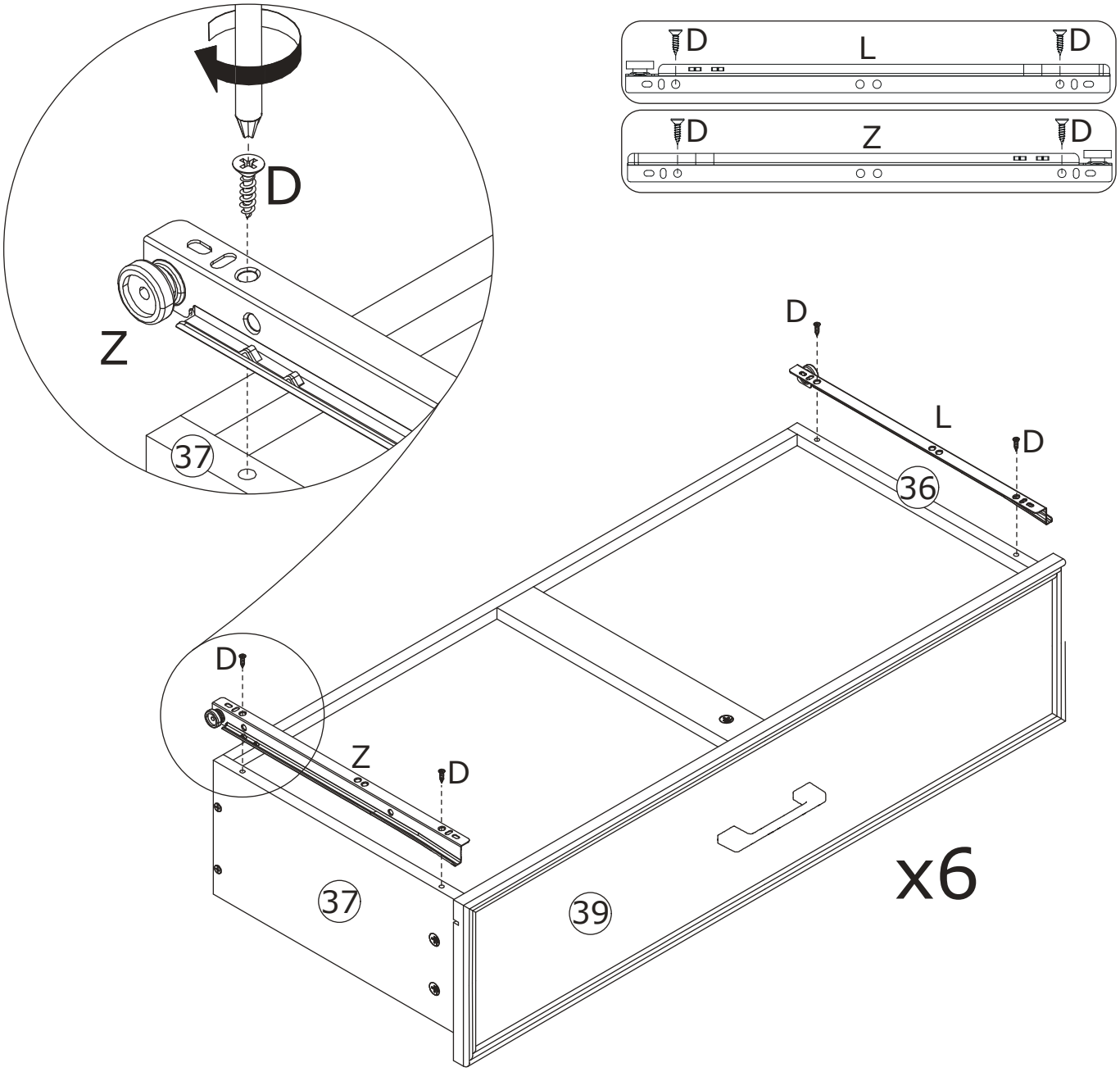

53

A x 15	F x 6	T x 3	
∅6 x 35 mm	∅4 x 14 mm		

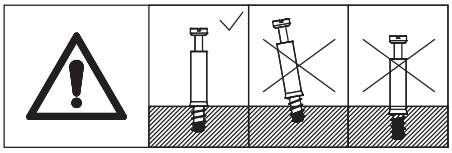

Attach accessory (A) to plate 42 and use accessory (F) to secure accessory (T) to plate 42 as shown.

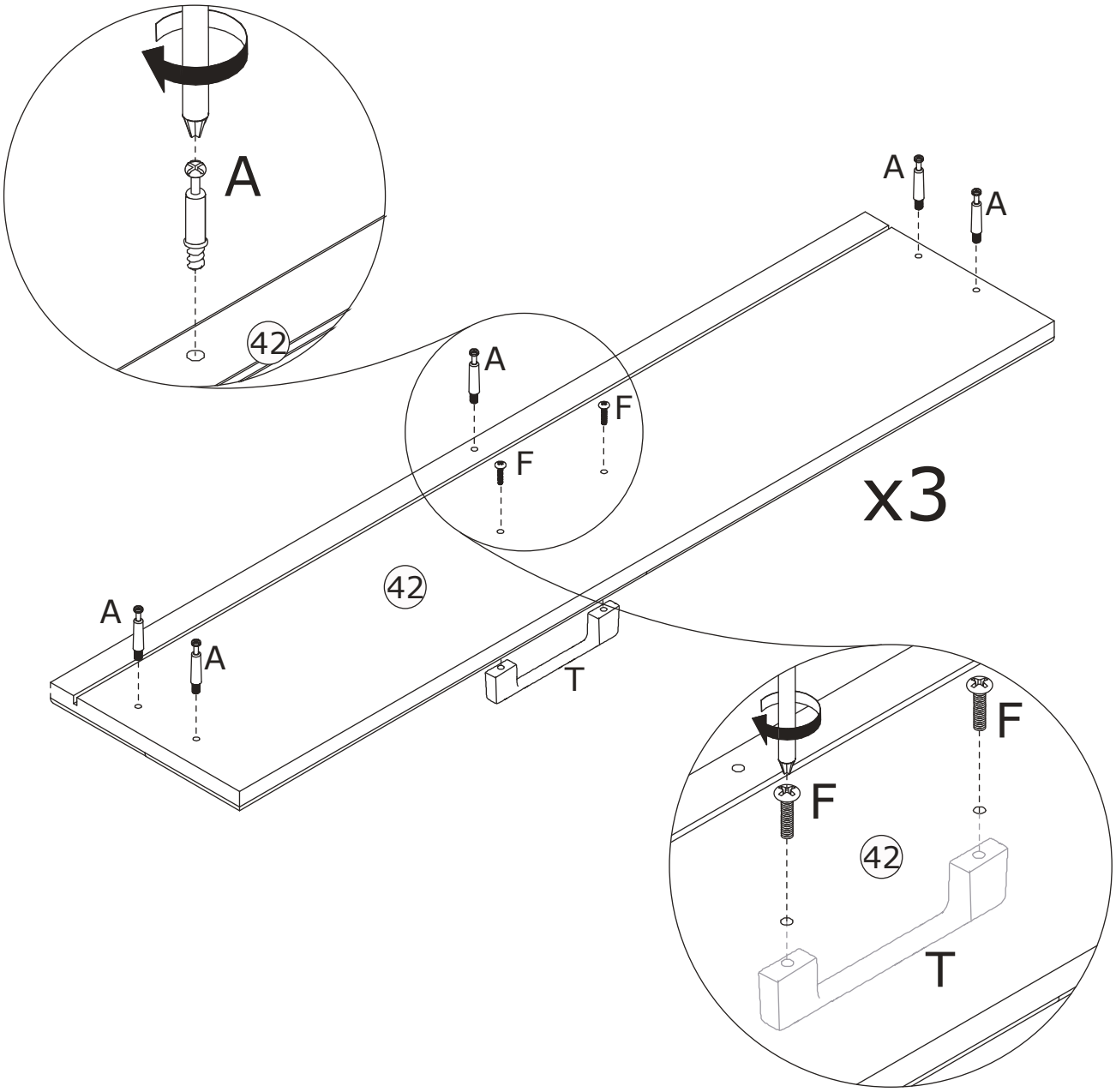

54

P x 15

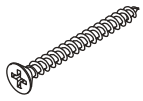

∅3 x 30 mm

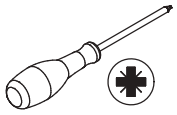

Connect plates 36, 37, and 47 to plate 41 and secure with (P) as shown.
Insert plate 43 into the recess as shown.

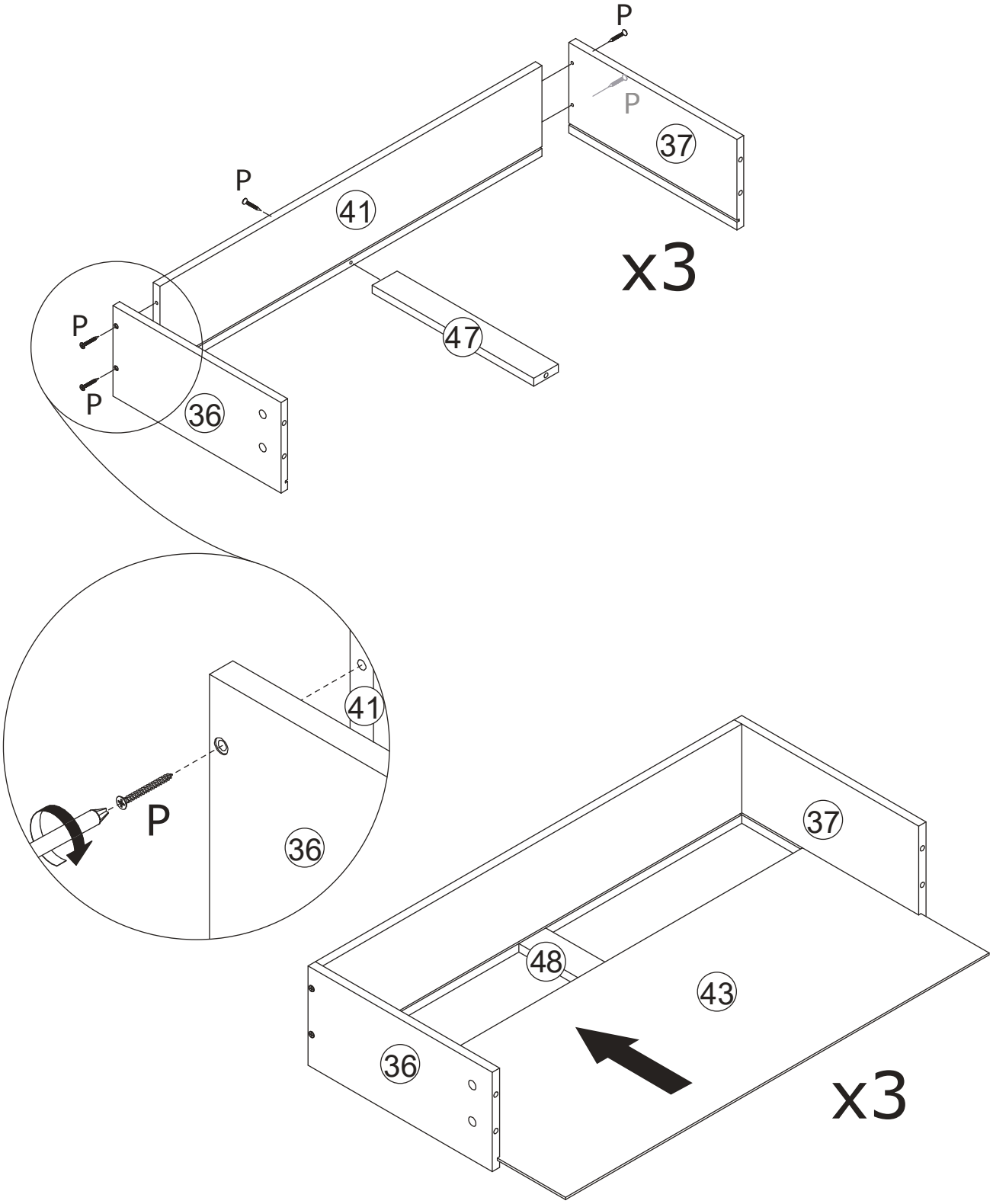

55

B x 15

∅9.5 x 15 mm

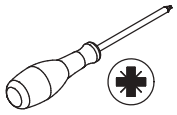

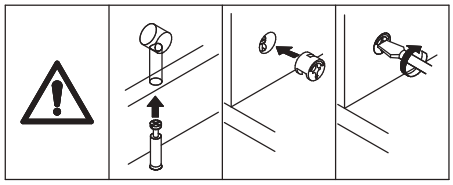

Connect and secure plates 36, 37, 47 and plate 42 with fitting (B) as shown.

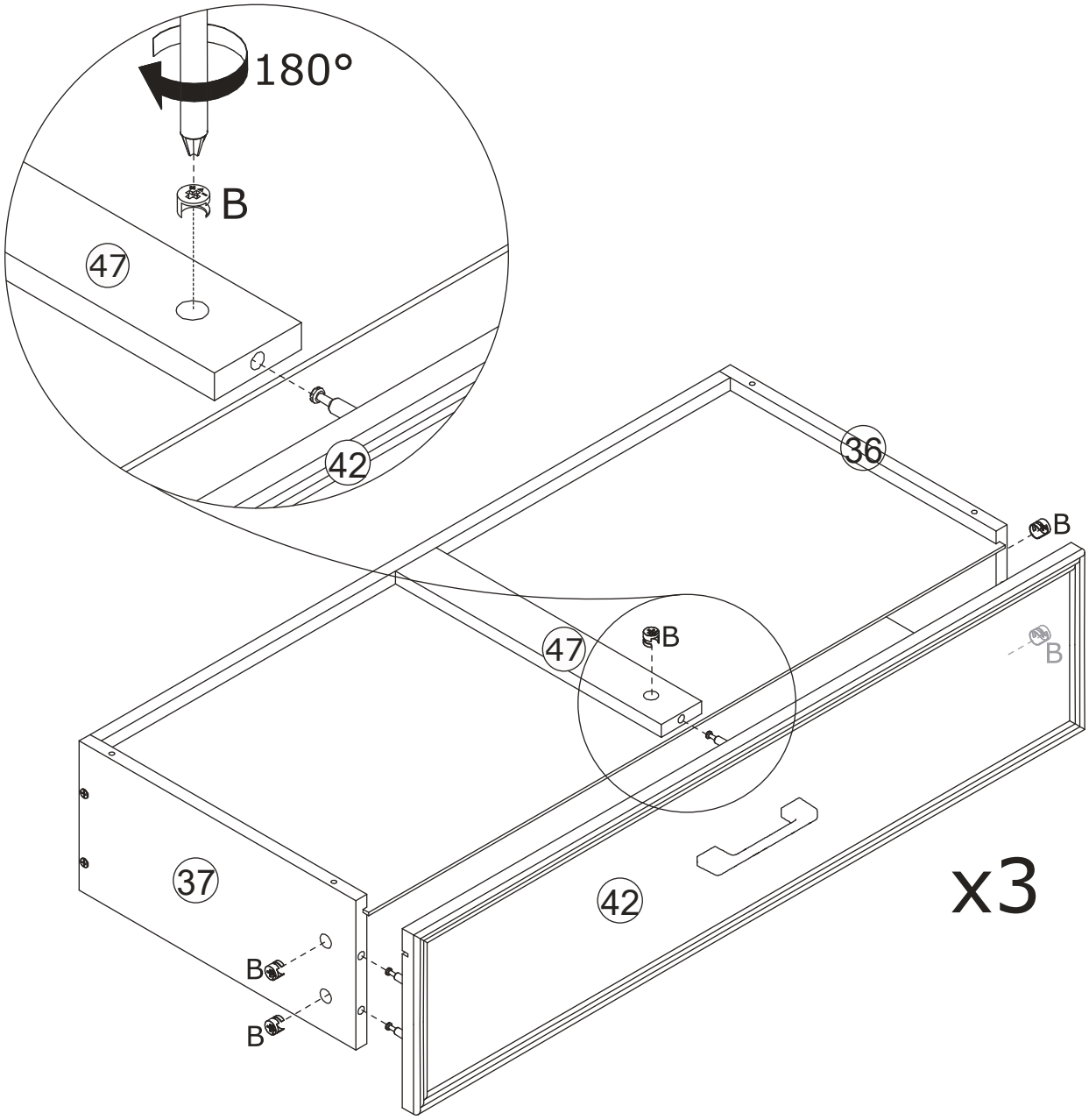

Assemble the screws (B) slower.

56

D x 12	L x 3	Z x 3	
∅3.5 x 12 mm	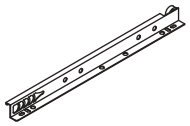	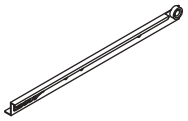	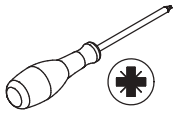

Attach fittings (L) and (Z) to plates 36 and 37, respectively, using fittings (D) as shown.

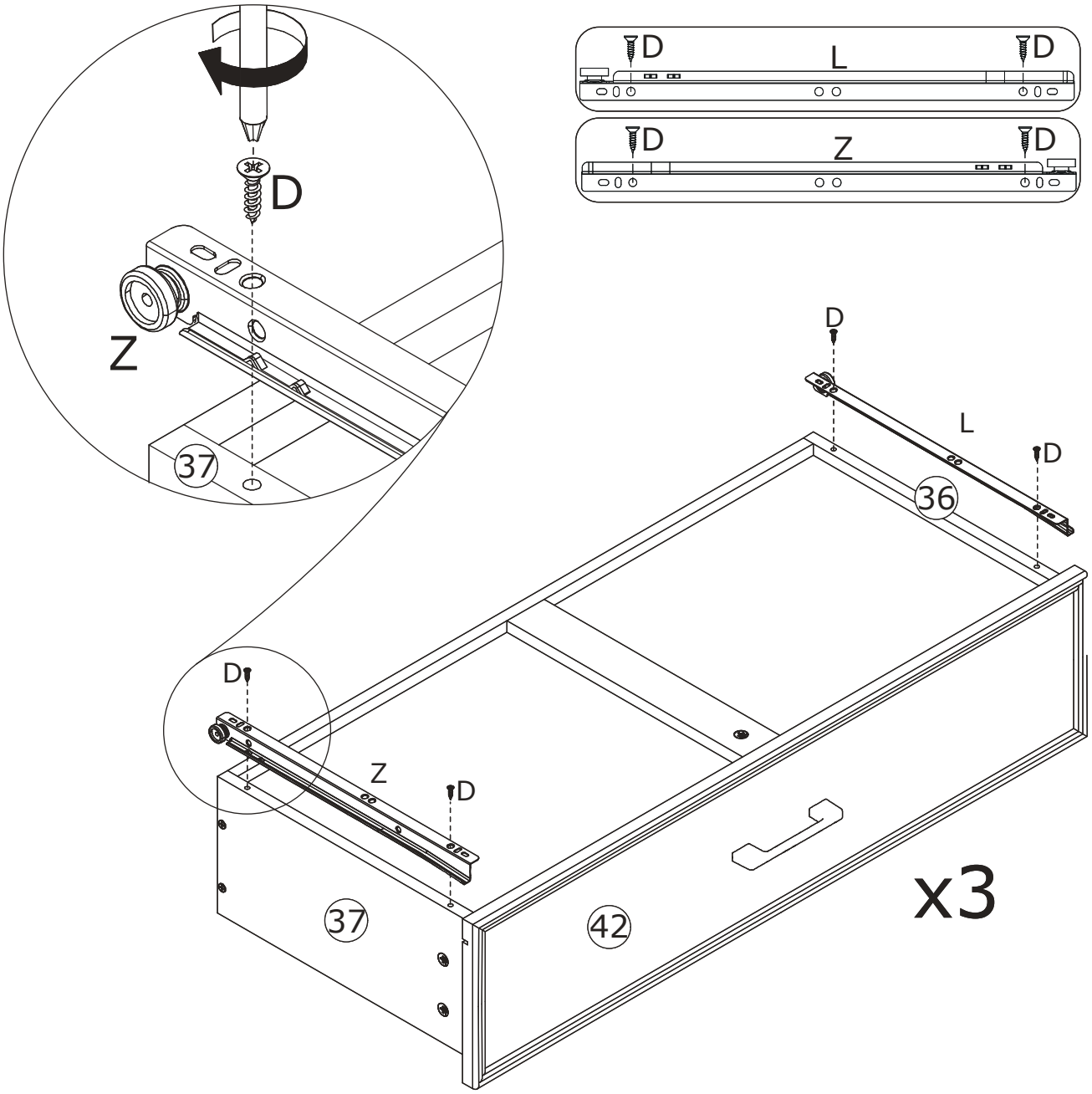

57

A x 8	F x 4	T x 2	
∅6 x 35 mm	∅4 x 14 mm		

Attach fittings (A) to plates 45, 52 and use fittings (F) to secure fittings (T) to plates 45, 52 as shown.

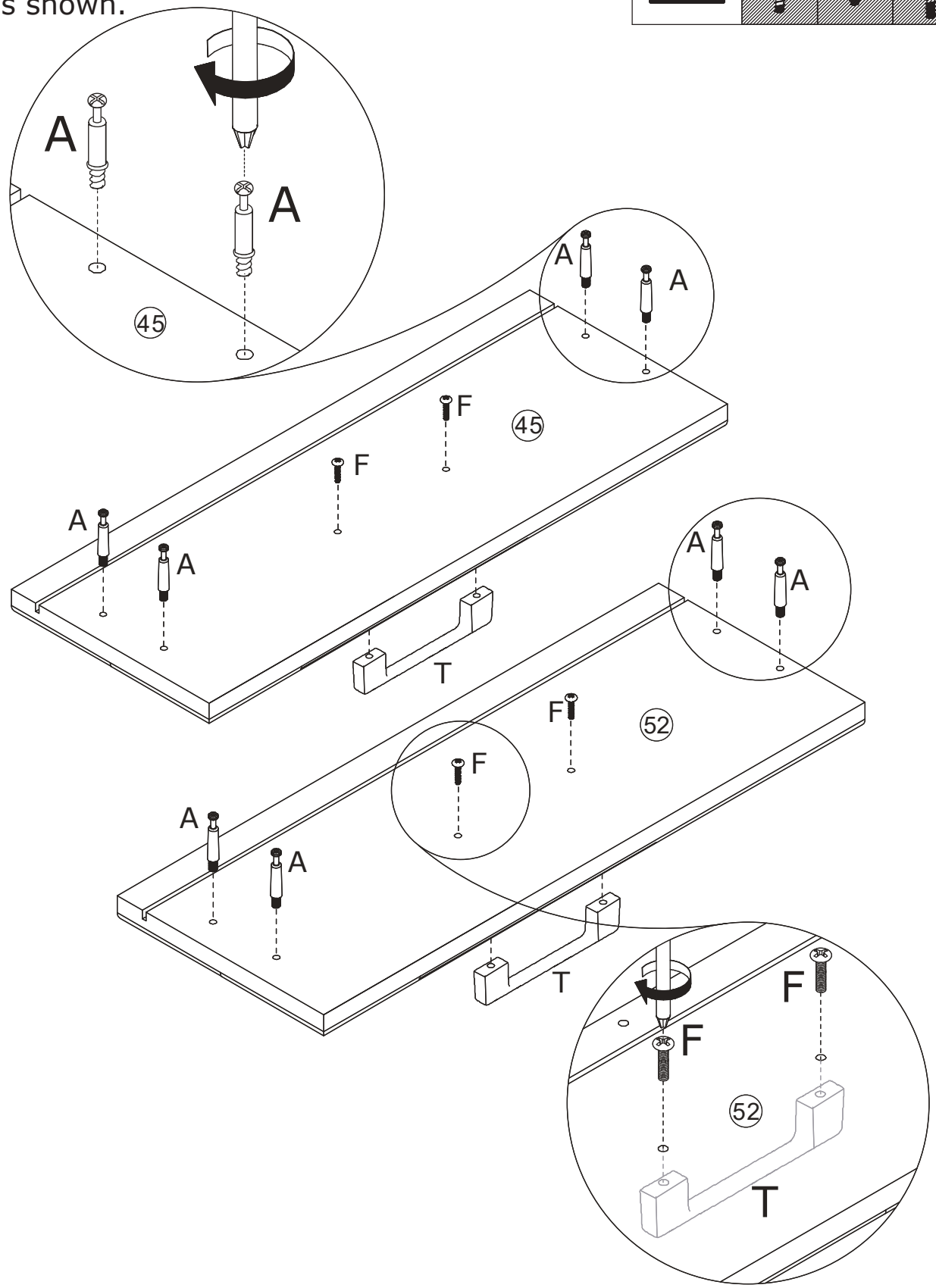

58

P x 8

∅3 x 30 mm

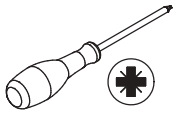

Attach plates 36, 37 to plate 44 and secure with screws (P) as shown.
Insert plate 46 into the recess as shown.

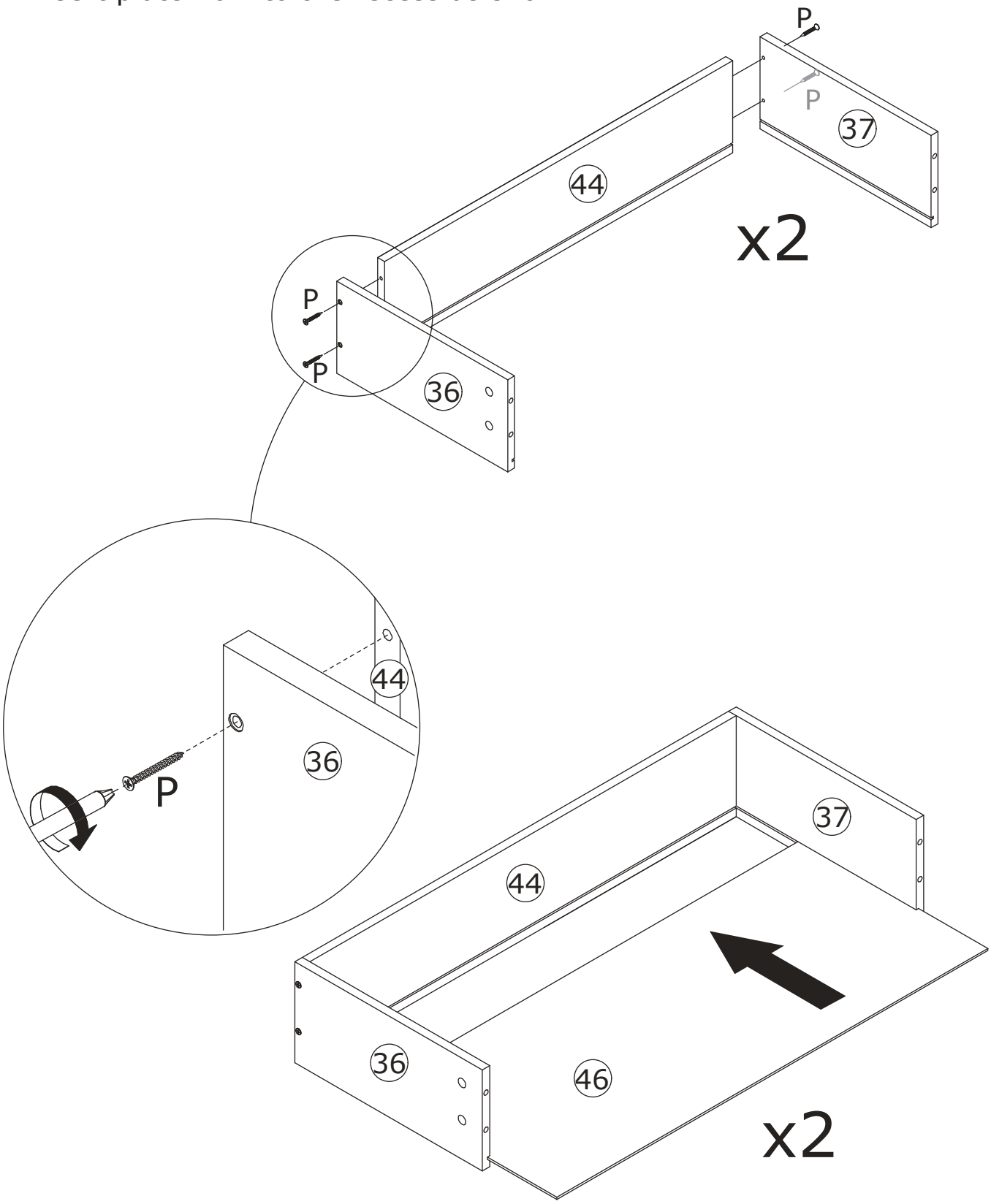

59

B x 8

∅9.5 x 15 mm

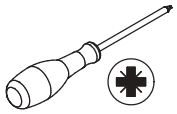

Assemble boards 36, 37 and boards 45, 52 together with fitting (B) as shown.

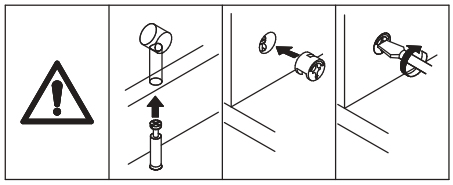

Assemble the screws (B) slower.

60

D x 8	L x 2	Z x 2	
∅3.5 x 12 mm	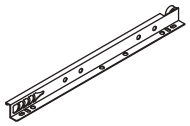	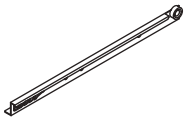	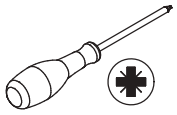

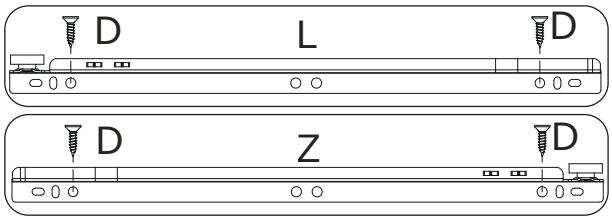

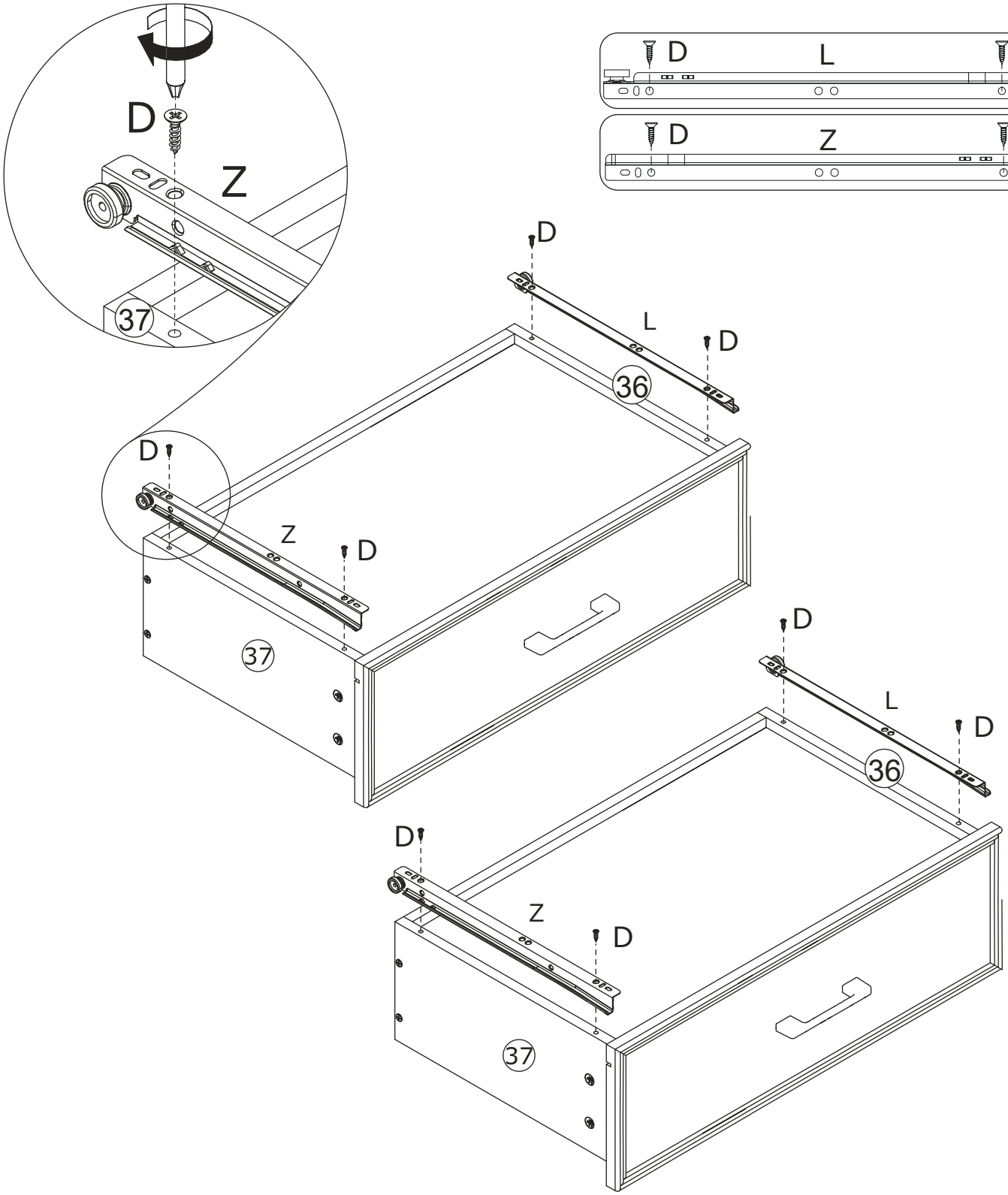

Install fittings (L) and (Z) on plates 36 and 37 respectively and secure with fitting (D) as shown.

61

Pay attention to the difference between the middle parts of the three types of door hinges

- The large curved door hinges(G) are used on the outermost door plates
- And the small curved door hinges(J) are used on the door panel in the middle of the cabinet
- Hinges (V) with the same curvature as G but small er in size are fitted to the centre cabinet door.

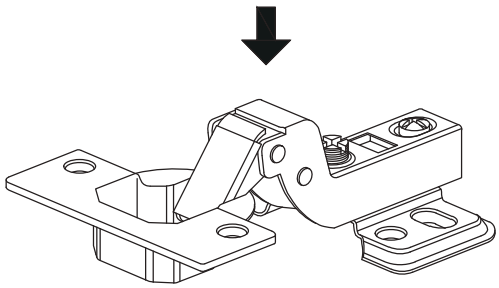

G

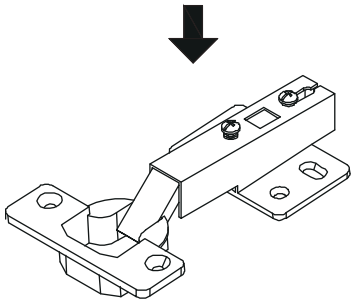

J

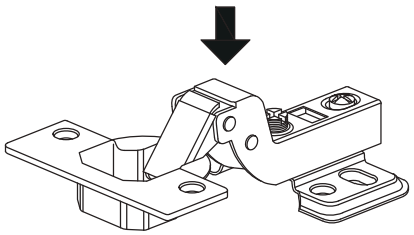

V

62

D x 40	G x 20	
∅3.5 x 12 mm		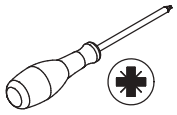

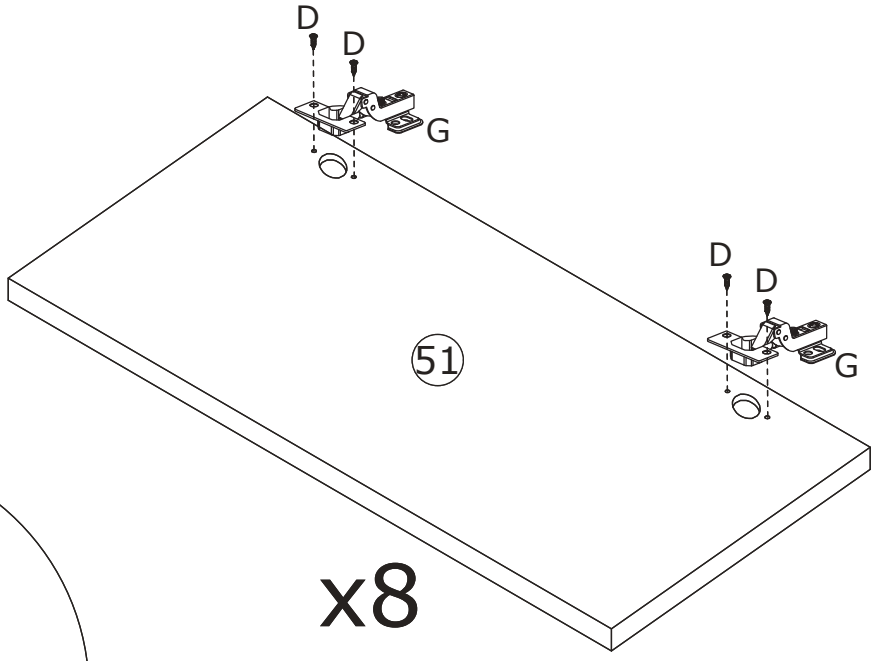

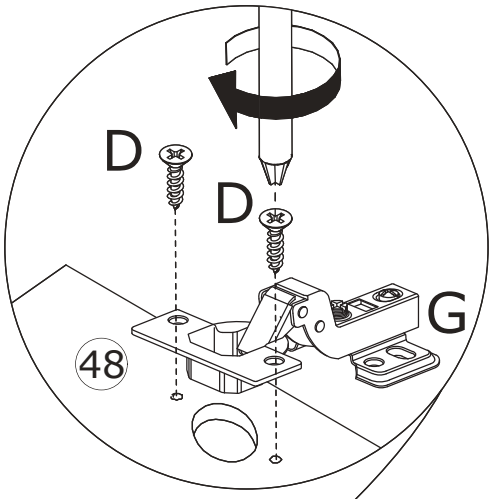

Use accessory (D) to install accessory (G) on boards 48, 51 as shown.

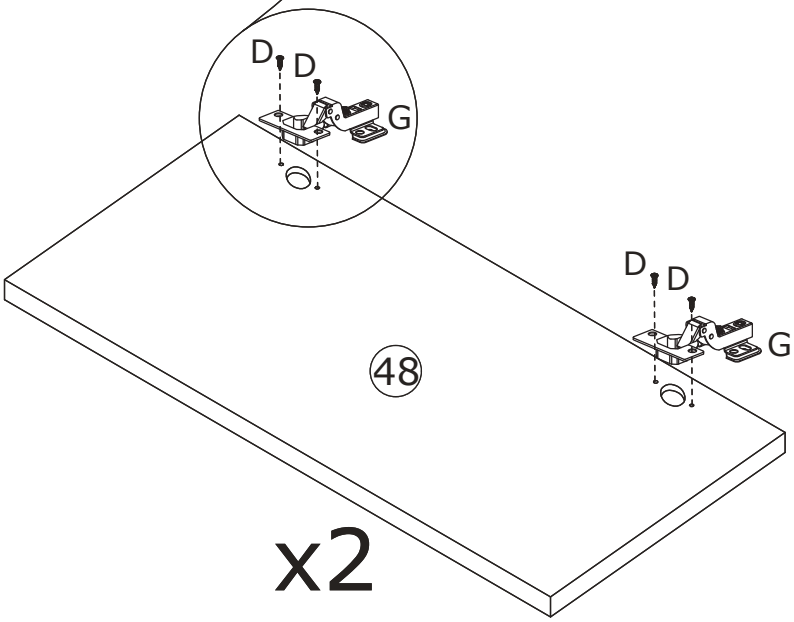

63

E x 20	T x 10	
∅4 x 18 mm	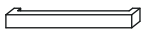	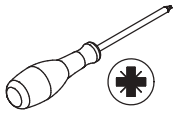

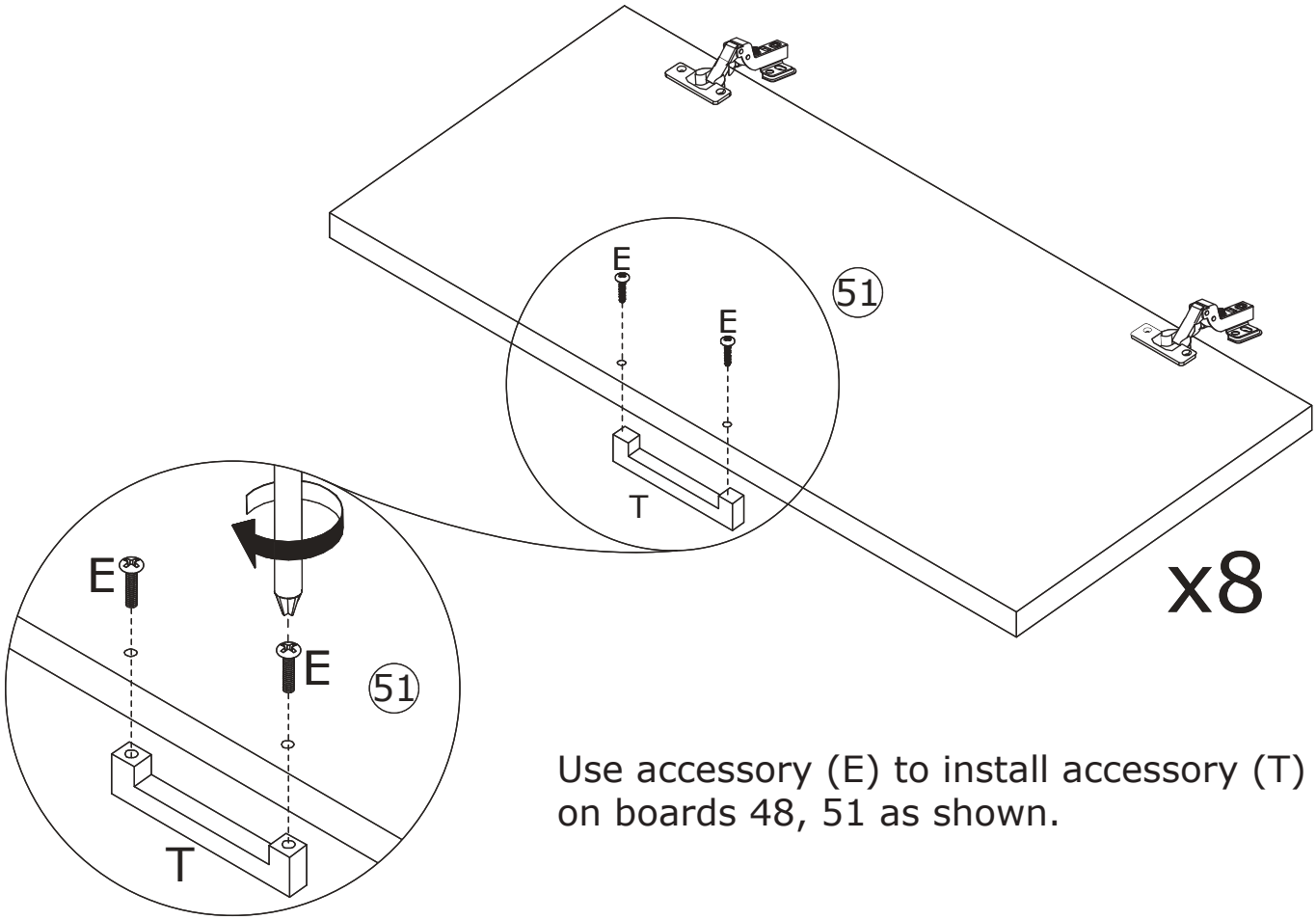

Use accessory (E) to install accessory (T) on boards 48, 51 as shown.

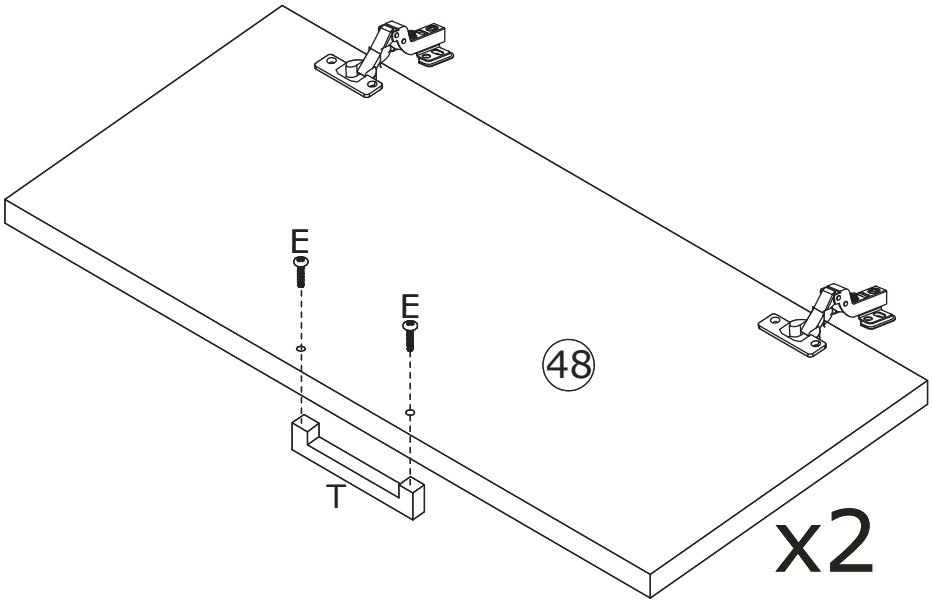

64

D x 80

∅3.5 x 12 mm

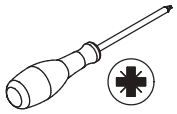

Use accessories (D) and (G) to mount boards 48 and 51 in the assembled section as shown.

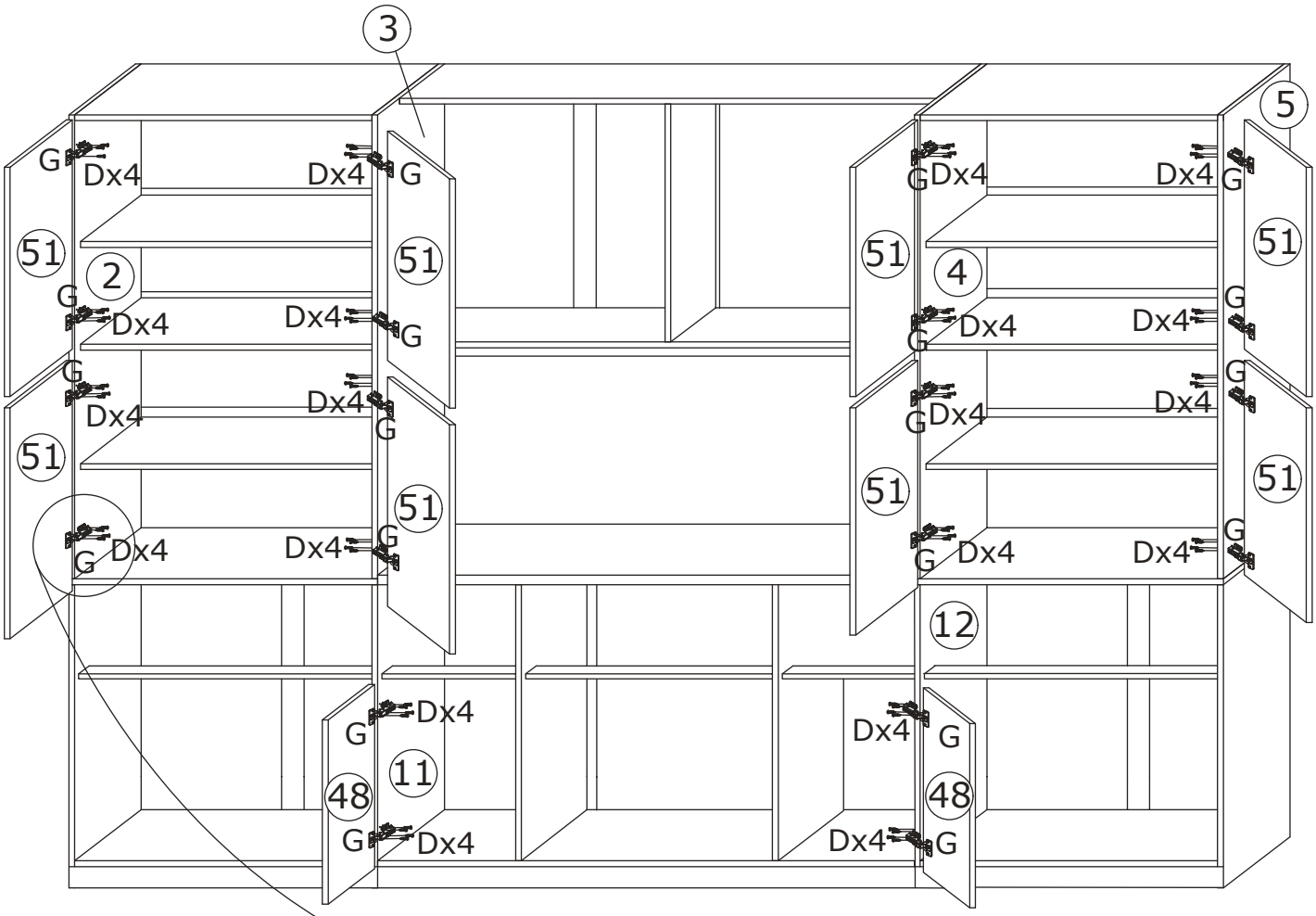

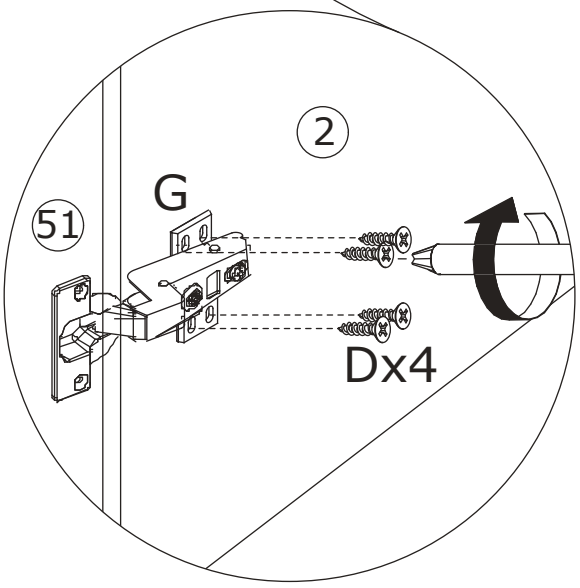

65

D x 8	V x 4	
∅3.5 x 12 mm		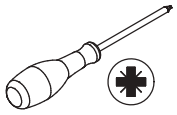

Use fittings (D) to attach fittings (V) to plates 49, 50 as shown.

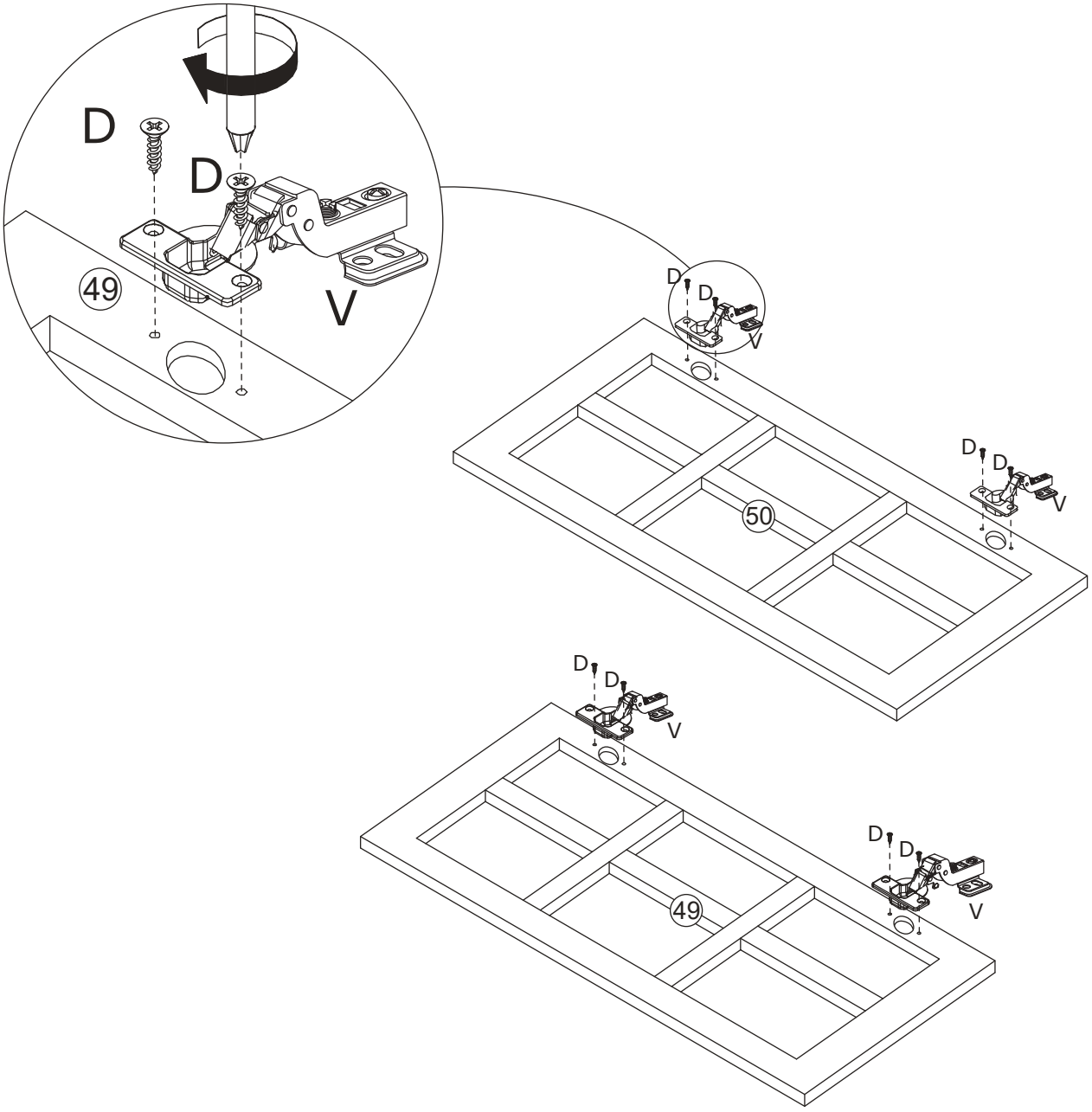

66

E x 4	T x 2	
∅4 x 18 mm	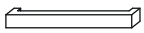	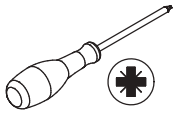

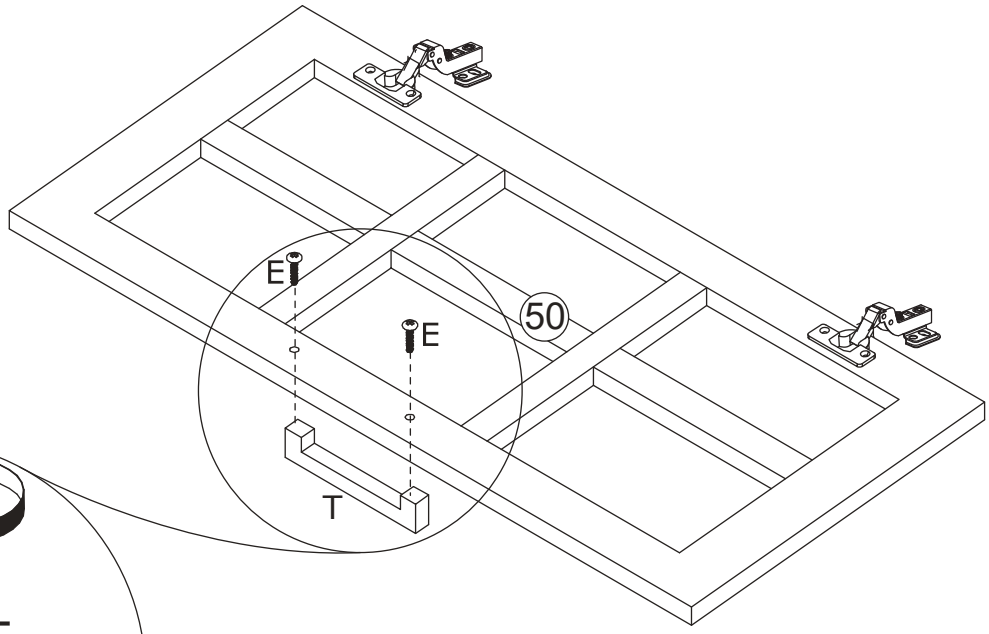

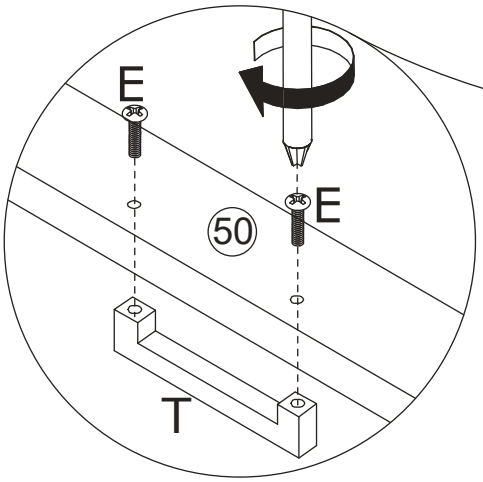

Attach fittings (T) to plates 49, 50 using fittings (E) as shown.

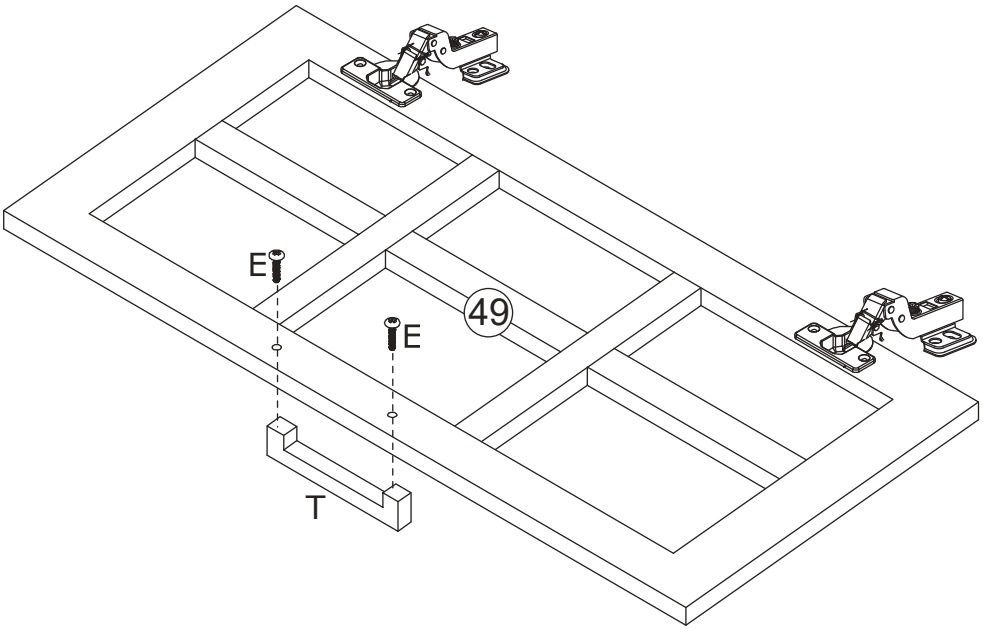

67

D x 16

∅3.5 x 12 mm

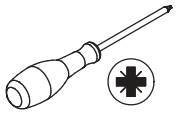

Secure plate 49 to plate 3 using fitting (D)
and plate 50 to 4 using fitting (D) as shown.

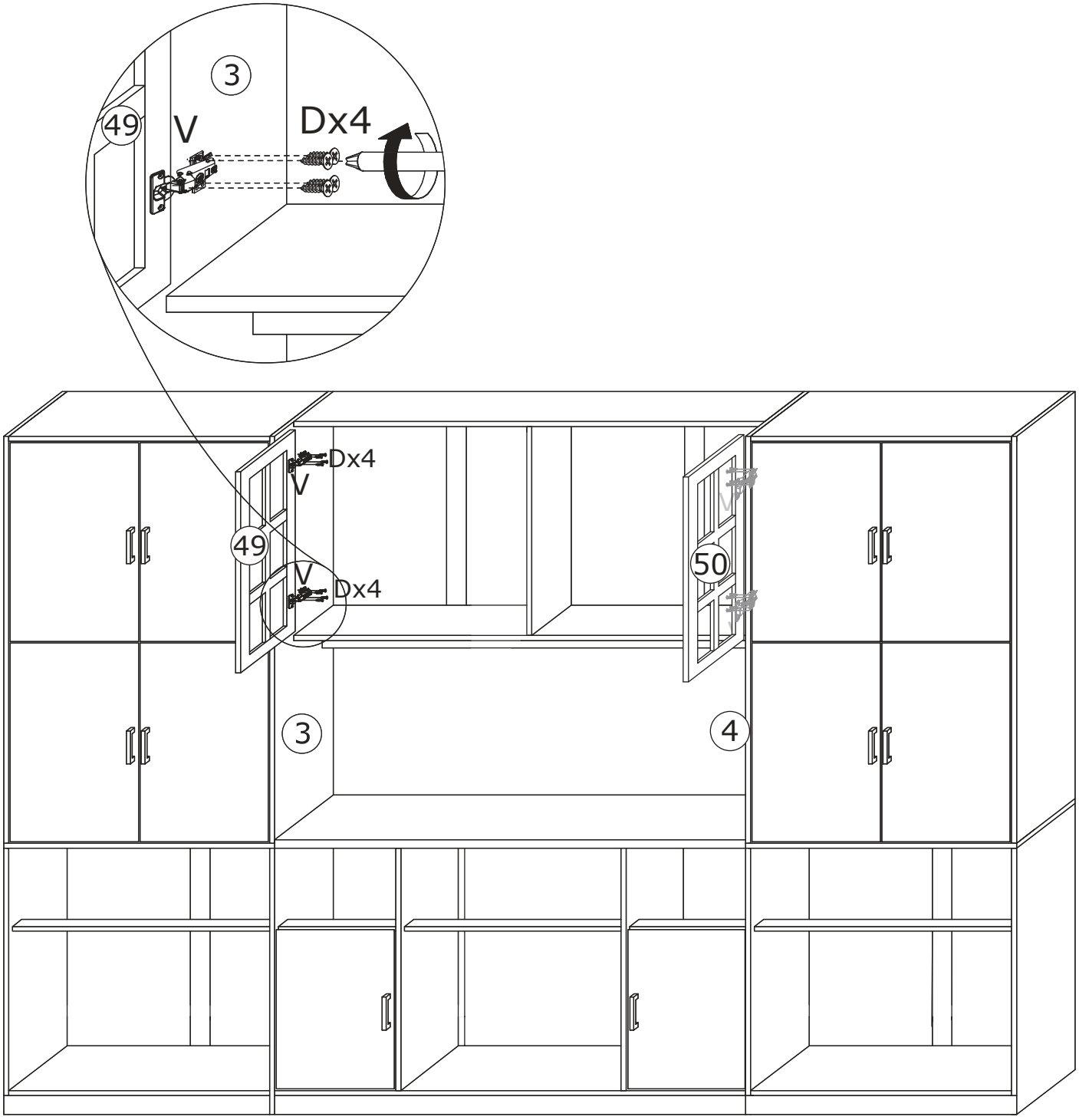

68

D x 8	J x 4	
∅3.5 x 12 mm	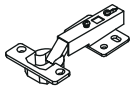	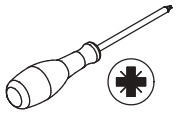

Use fittings (D) to attach fittings (J) to plates 49, 50 as shown.

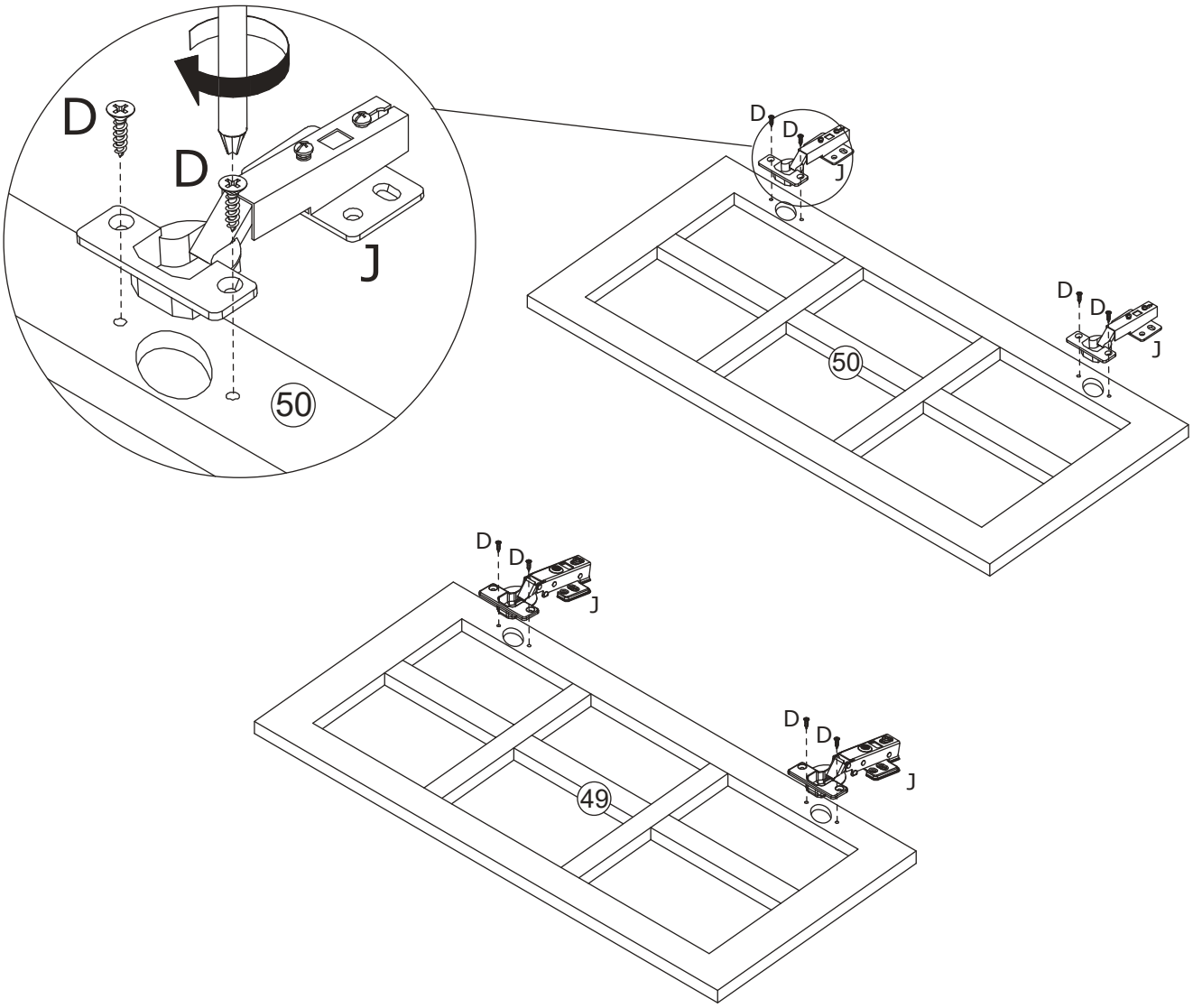

69

E x 4	T x 2	
∅4 x 18 mm	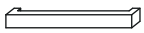	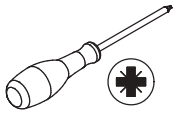

Attach fittings (T) to plates 49, 50 using fittings (E) as shown.

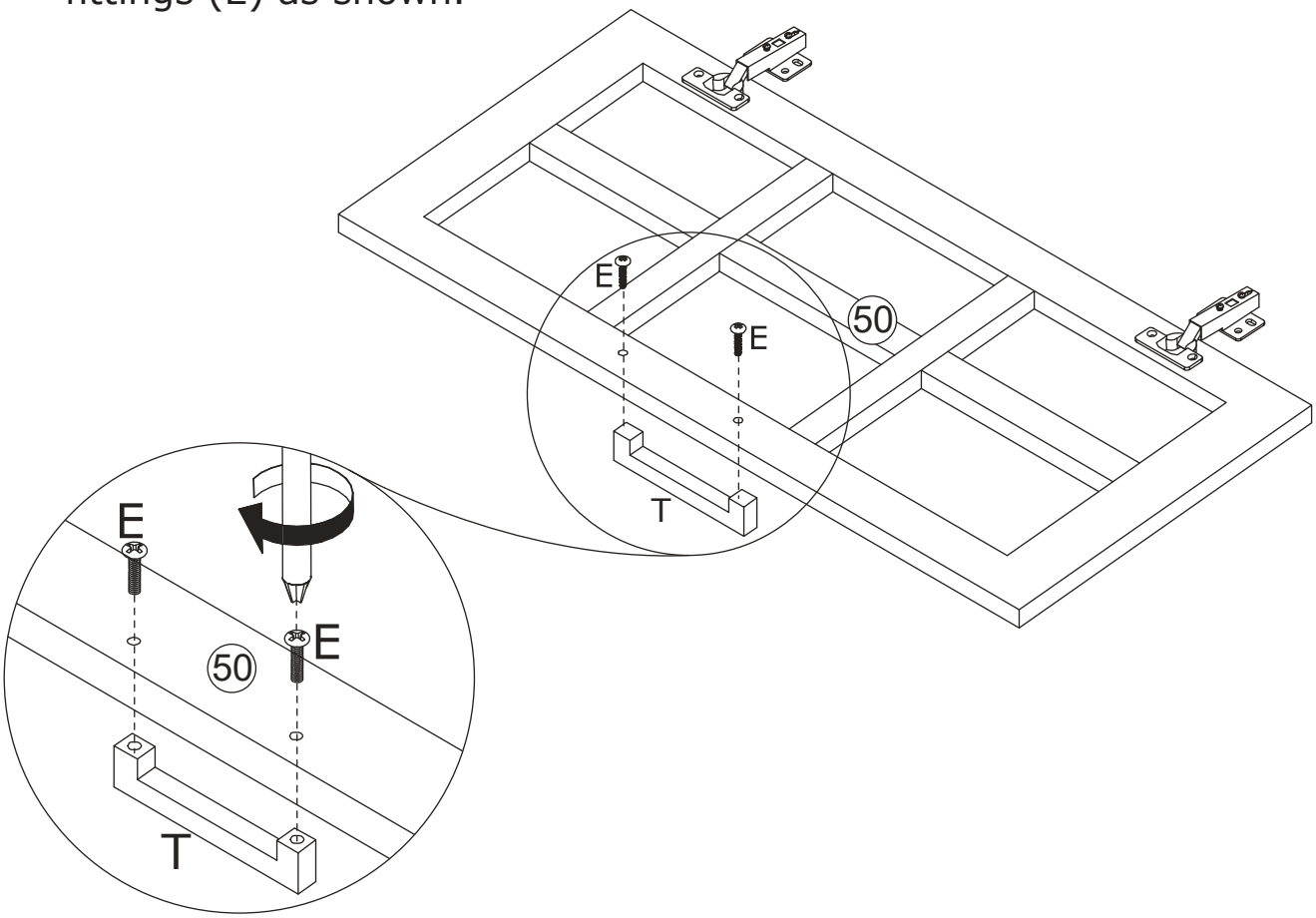

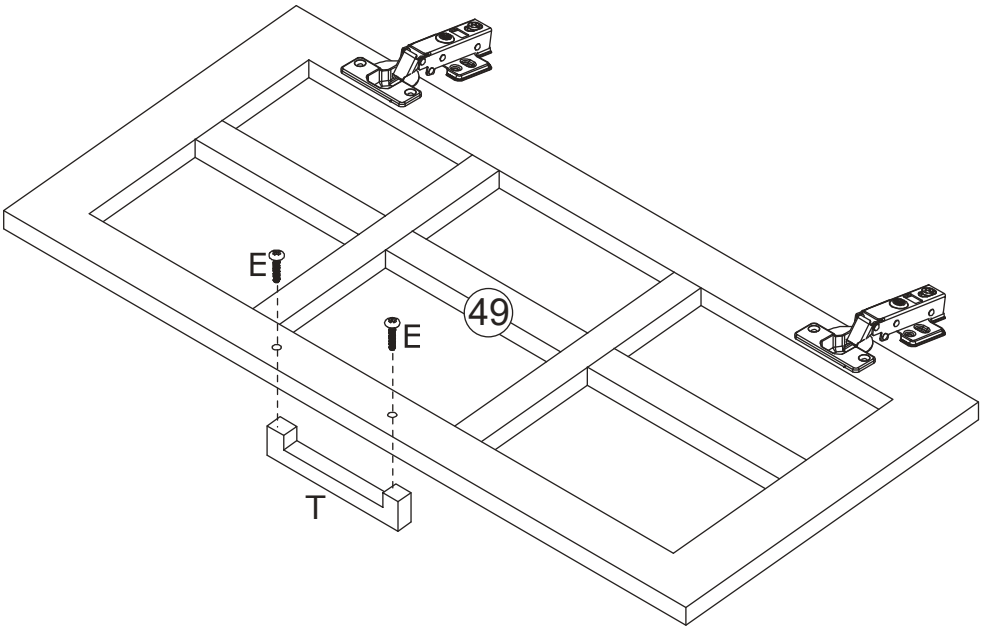

70

D x 8

∅3.5 x 12 mm

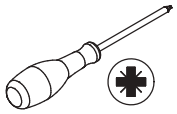

Secure plate 49 to plate 21 using fitting (D) as shown.

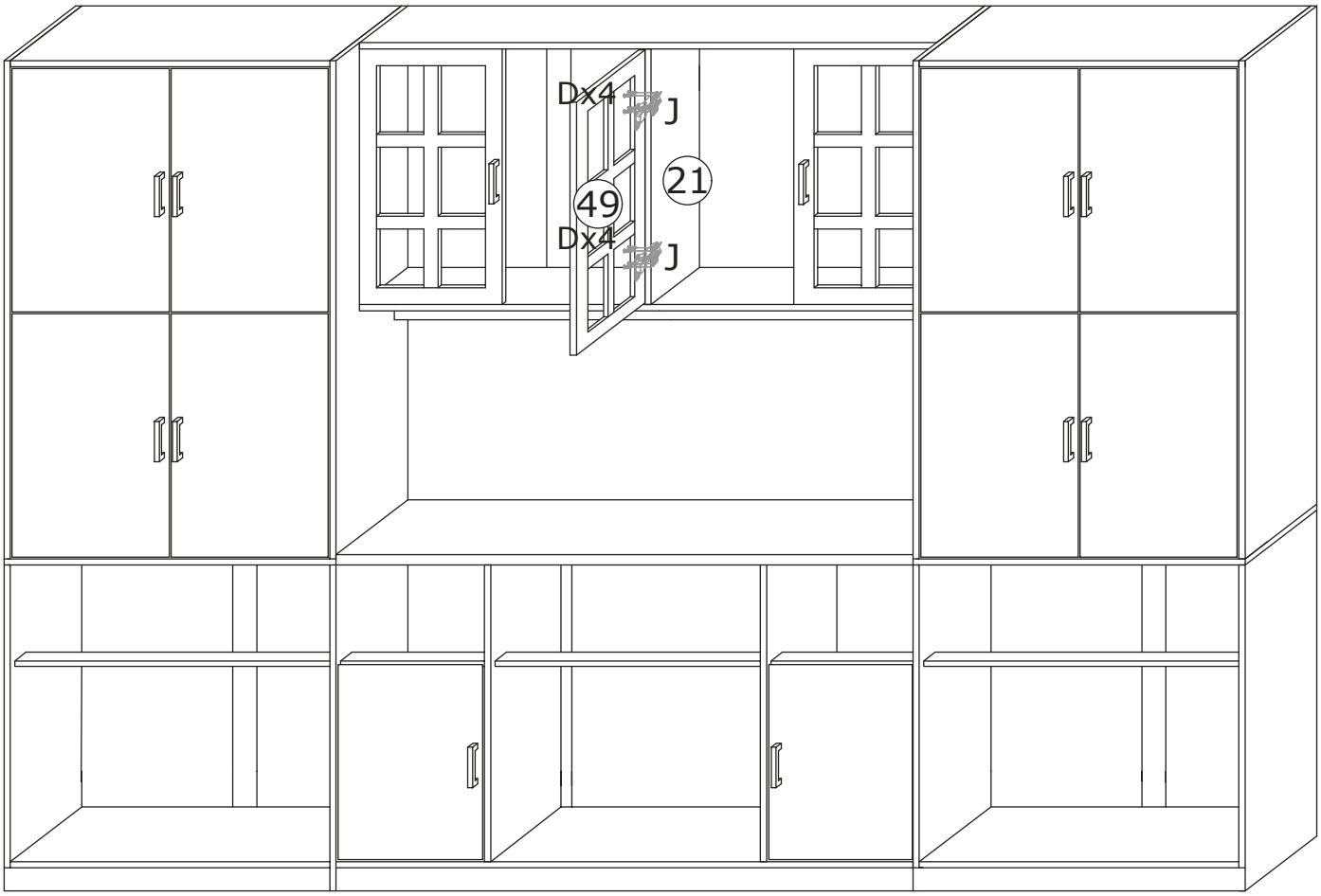

71

D x 8

∅3.5 x 12 mm

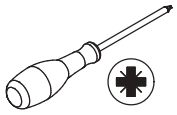

Secure plate 50 to plate 21 using fitting (D) as shown.

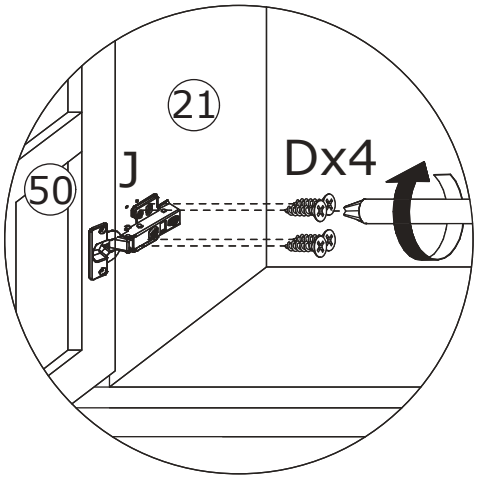

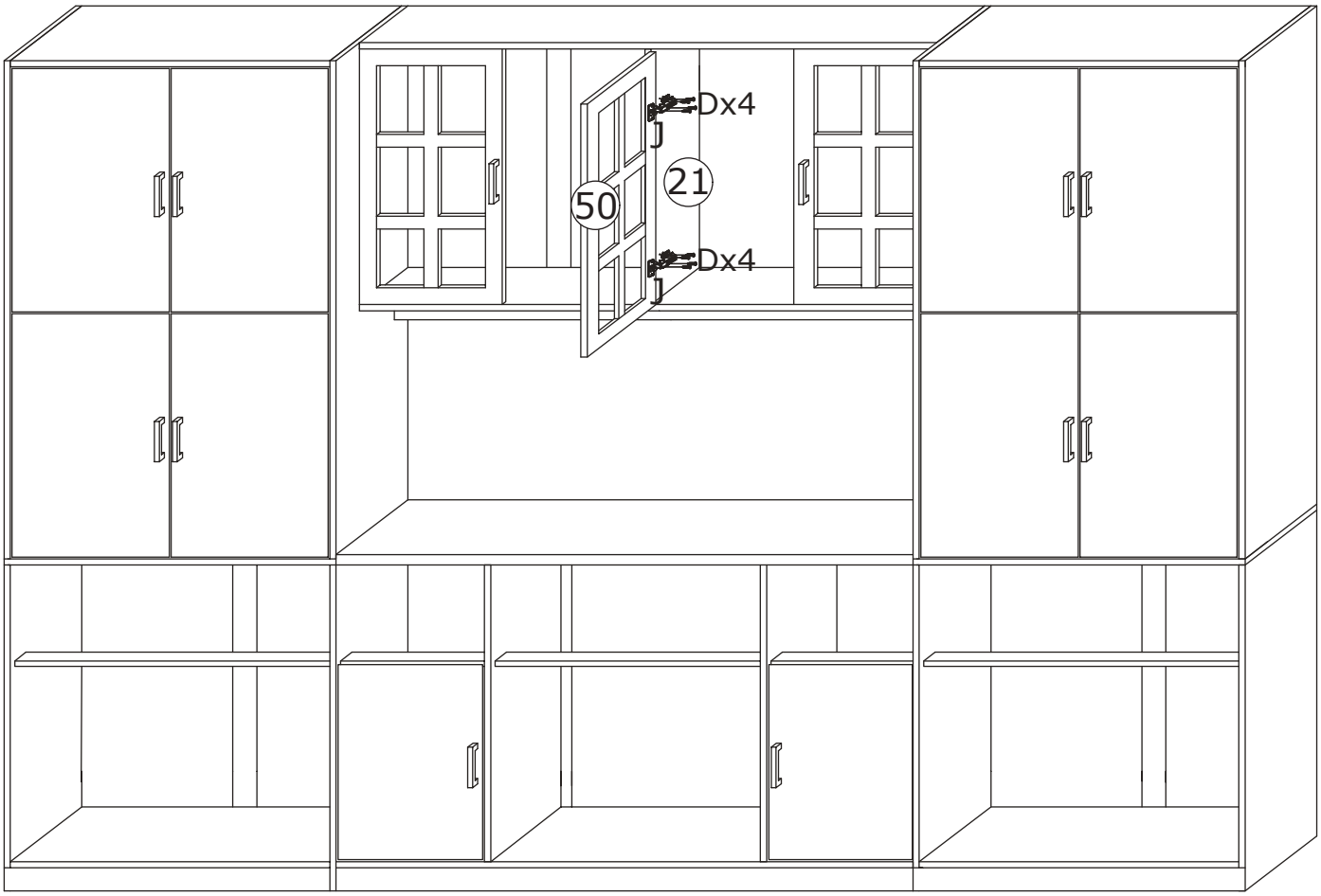

72

Place the assembled drawer as shown.

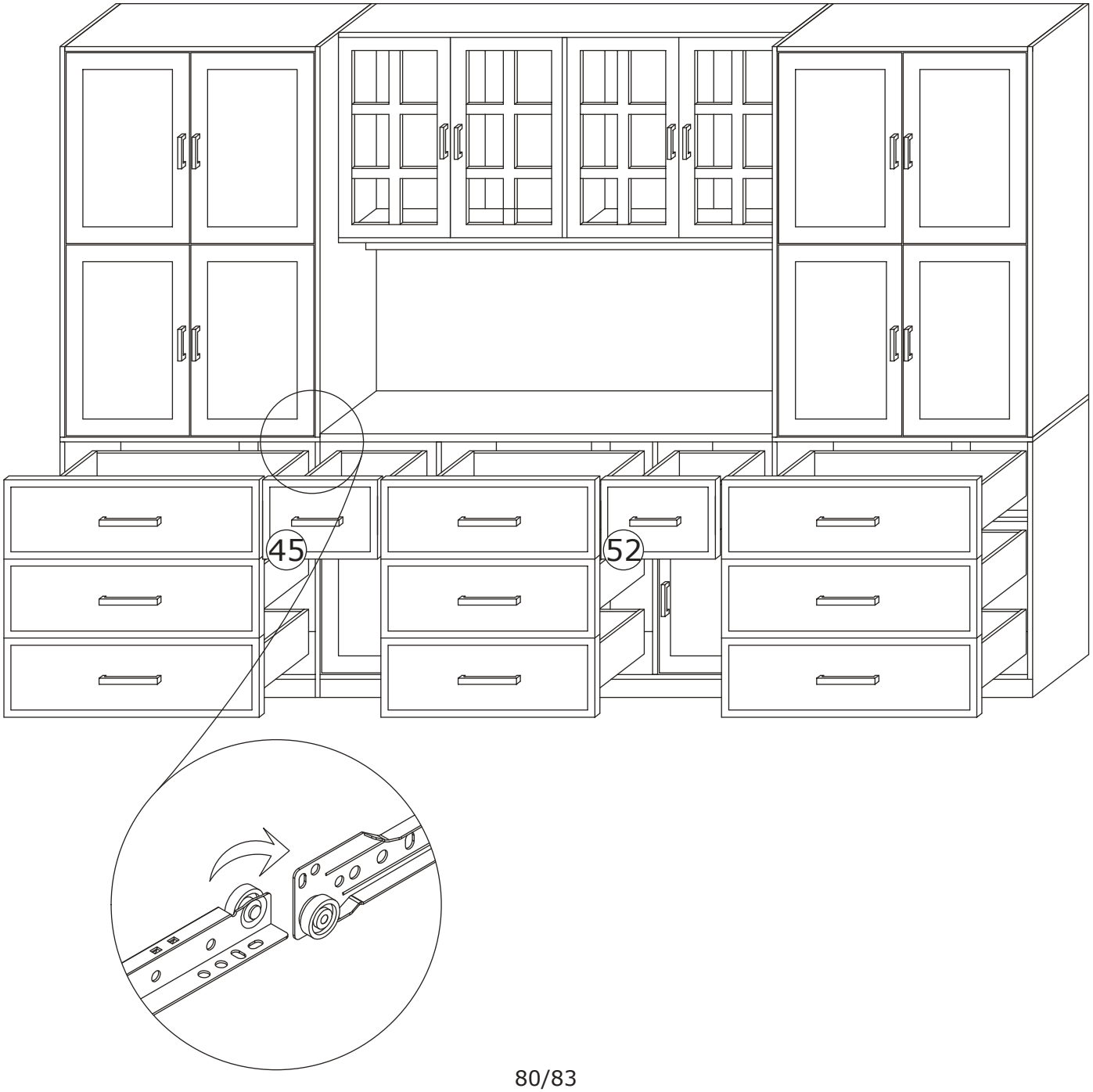

73

C x 24	R x 24	
∅3 x 14 mm		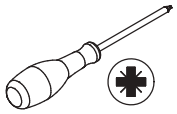

Use fitting (C) to secure (R) to plates 17, 18, 27, 30 as shown.

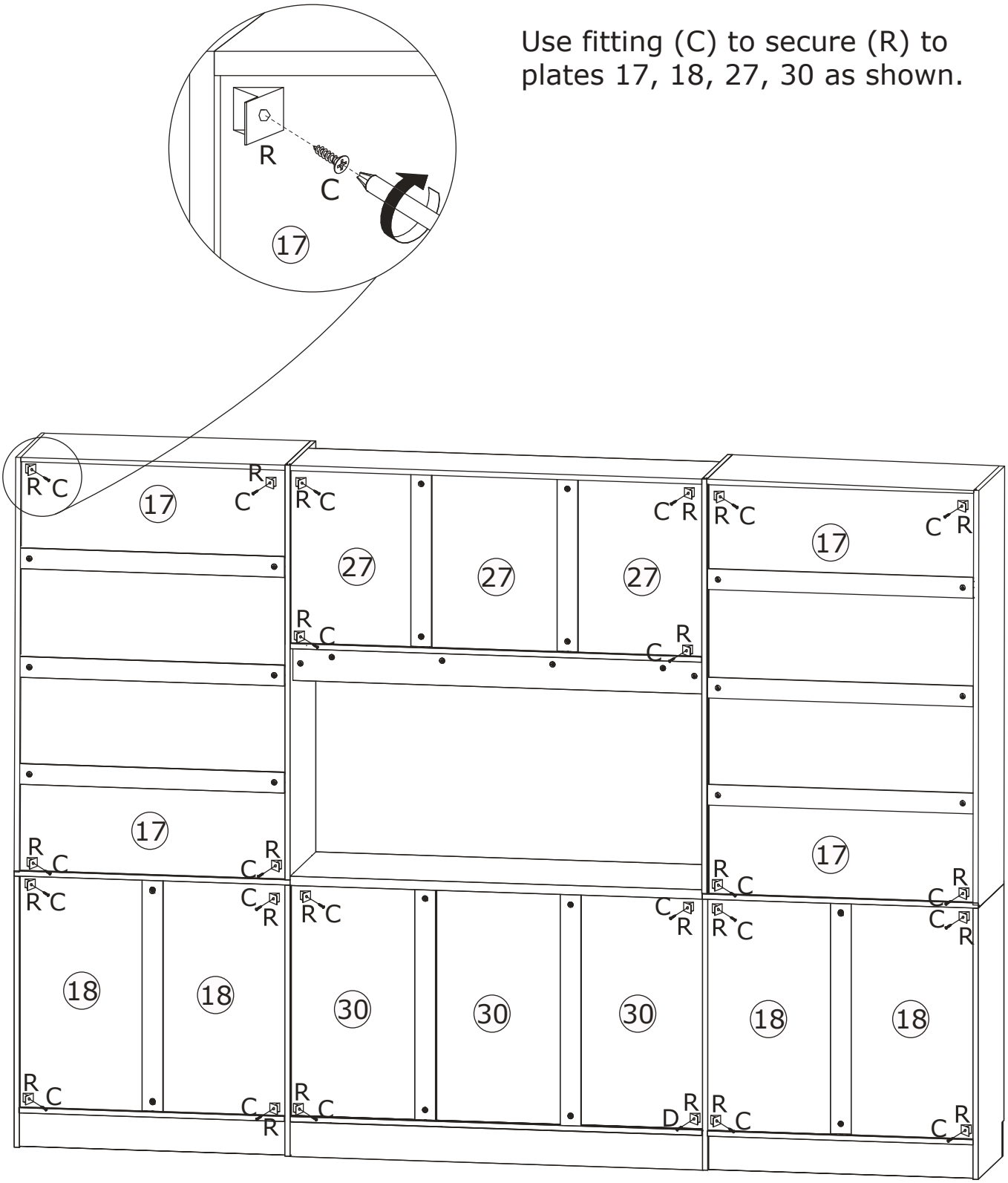

74

D x 20	M x 4	
∅3.5 x 12 mm		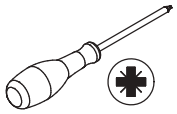

Use accessory (D) to attach accessory (M)
to the back plate as shown.

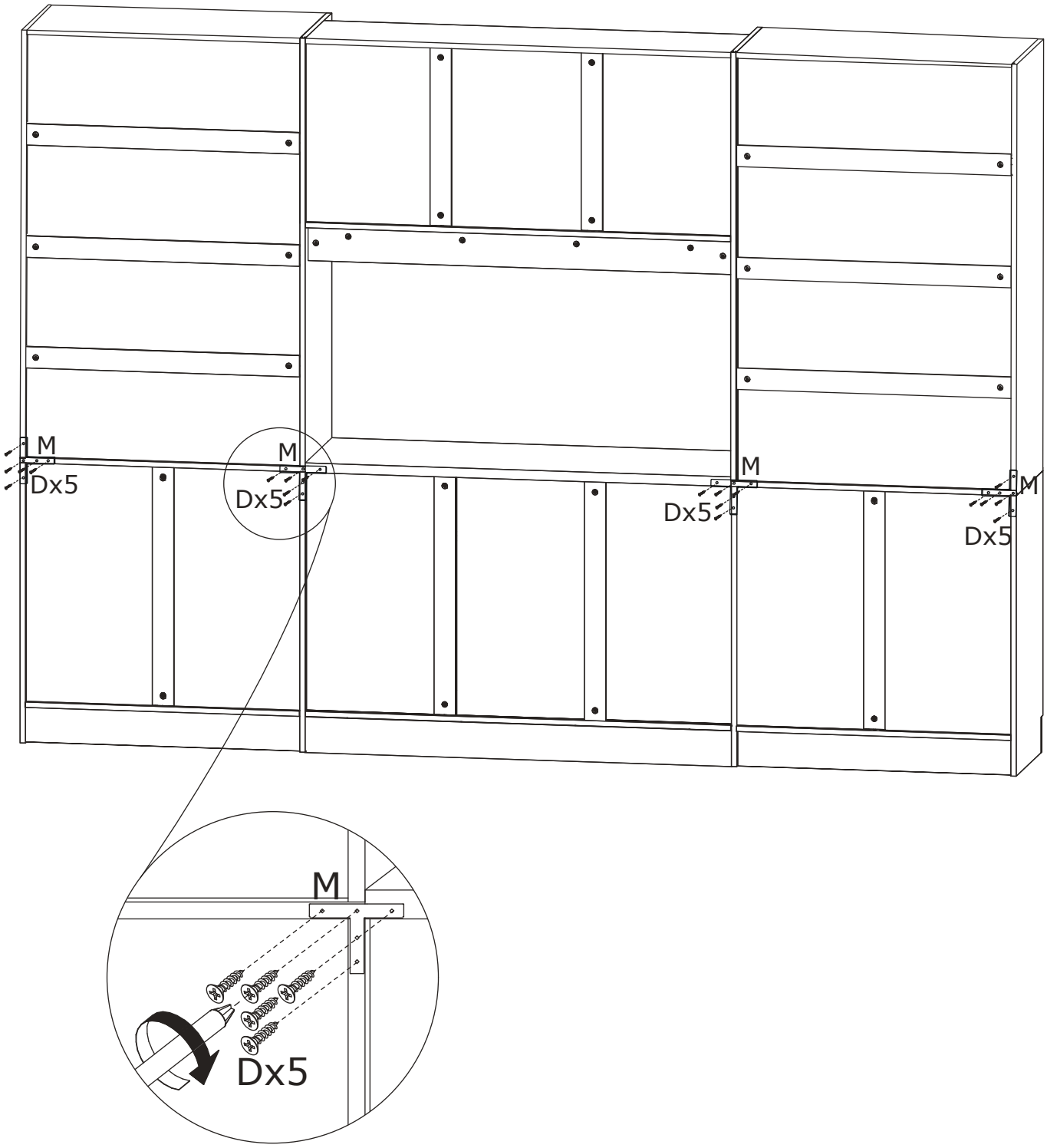

75

D x 8	S x 8	
∅3.5 x 12 mm	∅3 x 40 mm	
Y x 4		

Install anti-tipping device as shown.

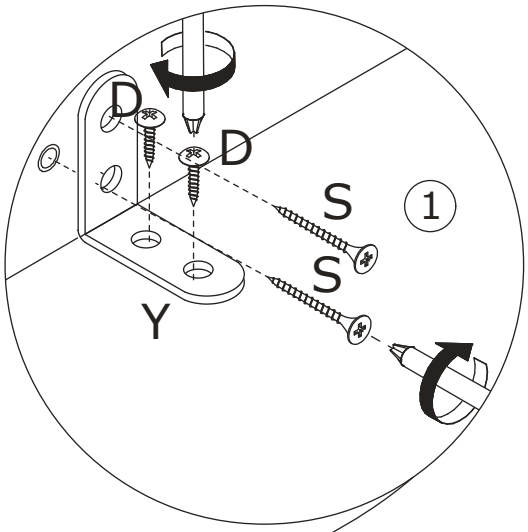

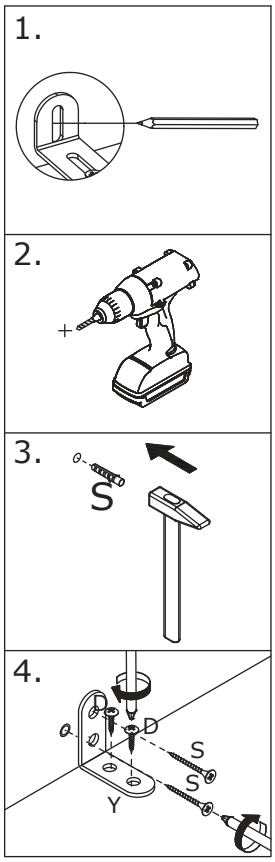

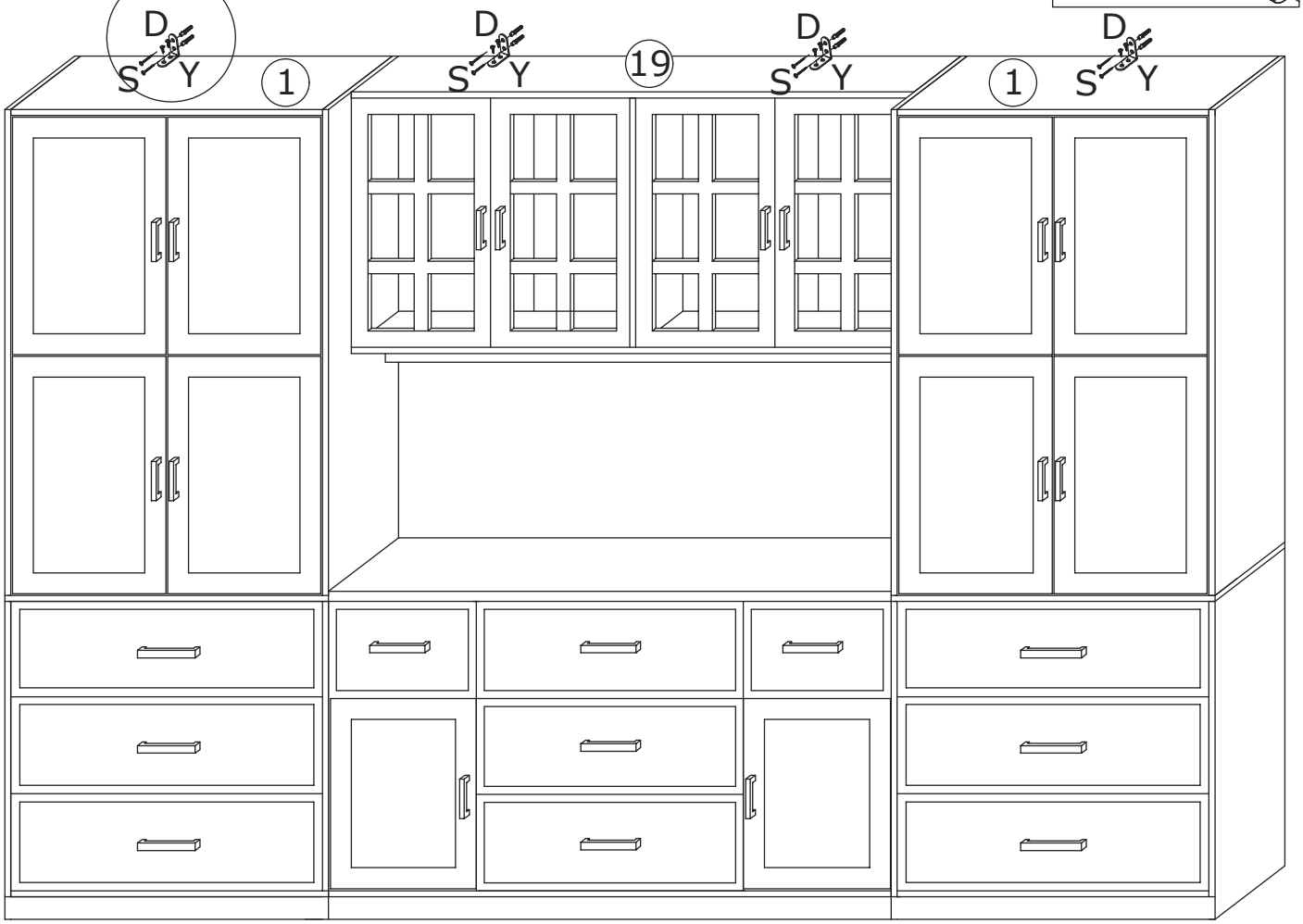

WARRANTY

WARRANTY CLAIMS

•There is a 30-day warranty for broken furniture or any other problems that do not work properly. The warranty will start from the date of purchase which must be verified by proof of purchase.

•Before making a claim, we may be able to answer your query, simply call us. Please leave your purchase order number, along with some details of the problem, if you want a replacement part. We will arrange within 48 hours. If there is out of stock, we will reply with a shipping date.

•The product must be used in accordance with the instructions provided. For health reasons.

•For other reasons, if the furniture needs to be returned, it must be cleaned and dried and operated within 30 days of receipt.

Type of Warranty Claim

•Failure to follow the furniture instructions will invalidate the warranty. Attention please.

•Does not include damage during installation, but includes damage during transportation.

Scope of responsibility

•Shall not bear any responsibility for misuse or user damage and / or loss of parts during the installation of furniture.

•After using, the damage and scratches of the furniture are not covered by the warranty.

The Warranty Relates to All Bought in The Us and Covers The Following Areas

•Sheet parts: 1 month from the date of purchase.

•Electrical parts: 1 month from the date of purchase.

RETURNS

CHANGED YOUR MIND AND NEED TO RETURN YOU ITEM?

PLEASE FOLLOW THE BELOW INSTRUCTIONS:

- If you have purchased and have simply changed your mind, follow the retailer's instructions for returns.

DEFECTIVE ITEMS

- If your item is defective in any way, i.e. it doesn't work but you can't identify why, in the first instance, please call us.

DAMAGED ITEMS

- If you receive an order with obvious shipping damage from the retailer, then we suggest the delivery is refused. If the delivery has been accepted and then shipping damage is found, please follow the specific instructions advised by the retailer.
  In all circumstances please save all packaging material and paperwork for the order. Please be aware that if you dispose of packaging material or attempt to return the merchandise without contacting the fulfiller, you jeopardise your chances of making a claim, and you may not receive a credit for the return.

AFTER-SALES CONTACT

adelahu@fufugaga.com

208-820-0068