Tall Storage Cabinet

-Instruction Manual-

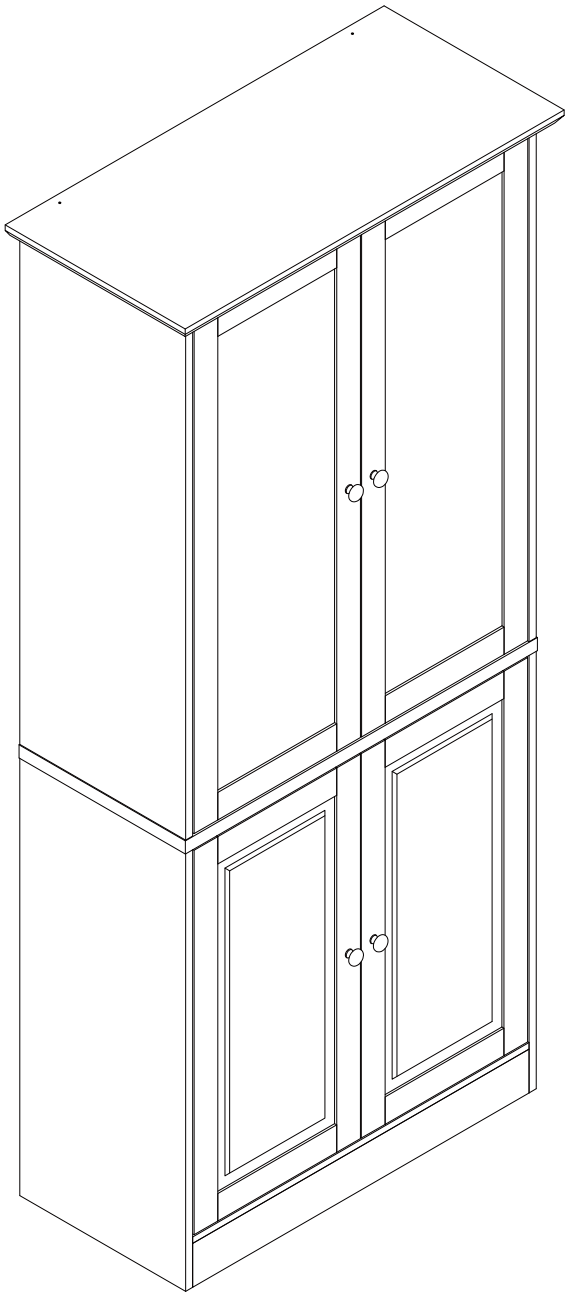

HARDWARE LIST

❶ 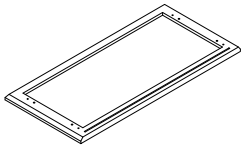 1PC	❷ 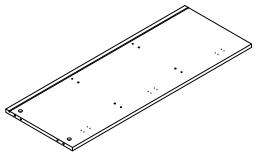 1PC	❸ 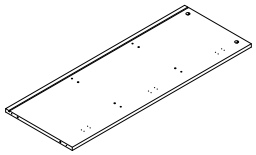 1PC	❹ 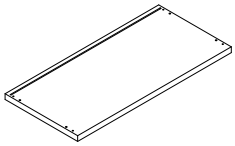 1PC	❺ 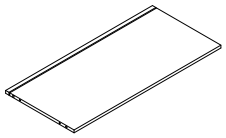 2PCS
❻ 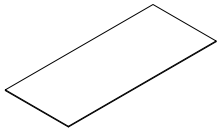 3PCS	❼ 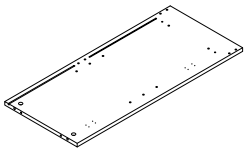 1PC	❽ 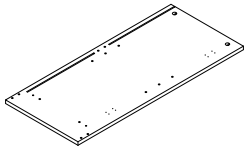 1PC	❾ 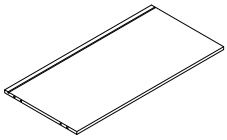 1PC	❿ 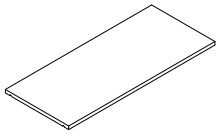 1PC
⓫ 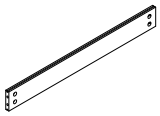 1PC	⓬ 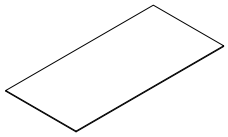 2PCS	⓭ 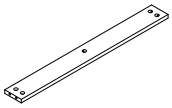 2PCS	⓮ 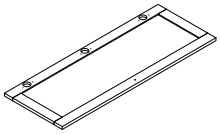 2PCS	⓯ 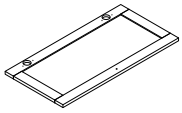 2PCS

HARDWARE LIST

A 6x35mm 34(+2)PCS	B Ø15*10 34(+2)PCS	C 6x30mm 28(+2)PCS	D M3.5x14mm 60(+2)PCS	E M4x40mm 4(+1)PCS
F M4x20mm 4 SET	G 10PCS	H M3x16mm 14(+1)SET	I 4(+1)PCS	J 6(+1)PCS
K + + + M4x14mm M4x40mm 2SET				

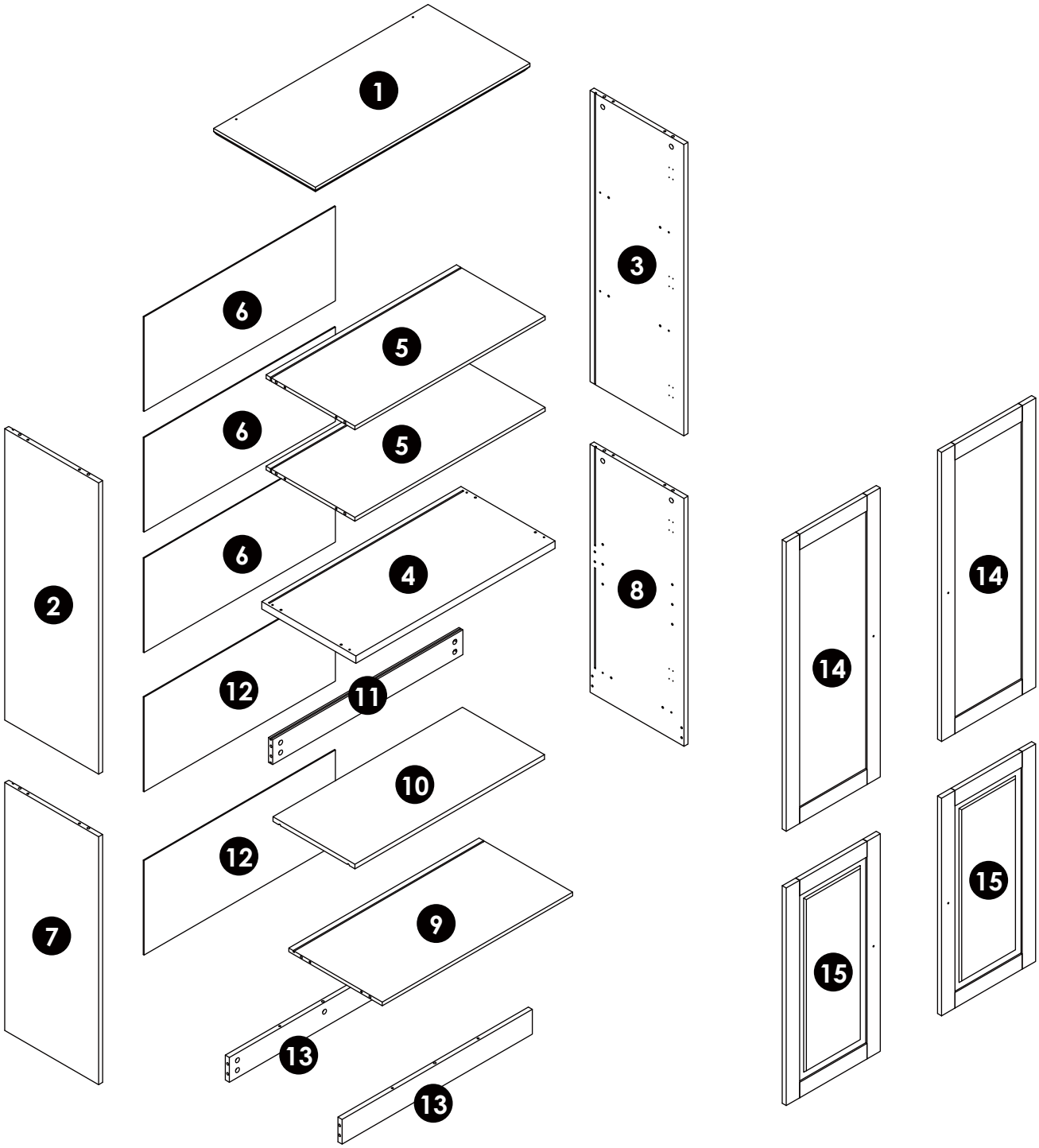
1
3
6
5
6
5
6
4
2
8
14
14
12
11
10
12
9
7
15
15
13
13

Tips

This furniture requires 2 people to assemble.
Make sure no parts missing or damaged before assembly.

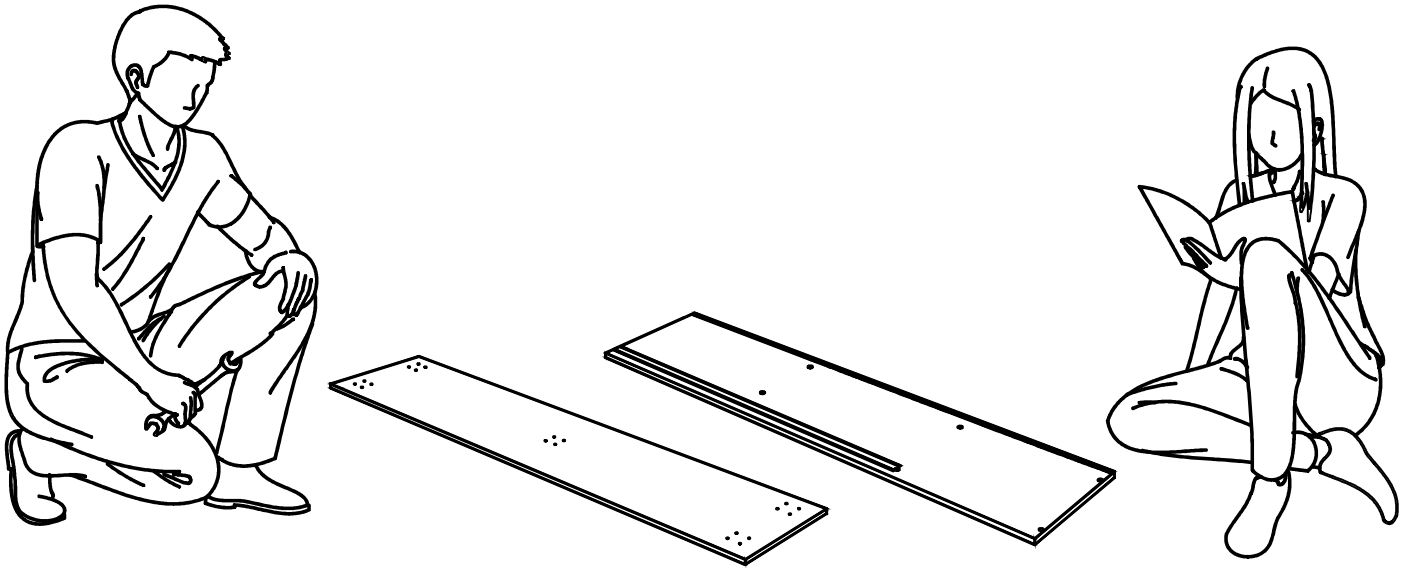

CAM BOLT INSTALLATION AS BELOW

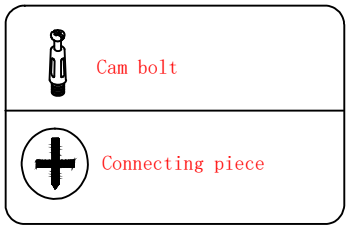

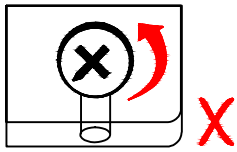

Rotate connecting piece if found in position illustrated above

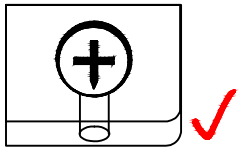

Correct orientation to receive bolts

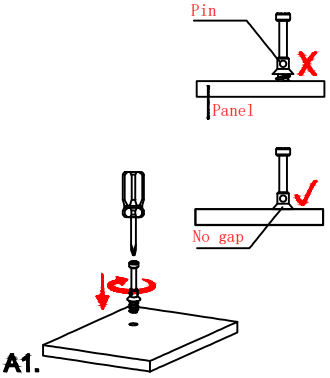

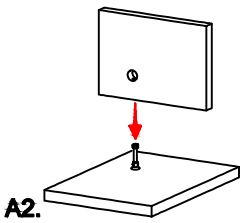

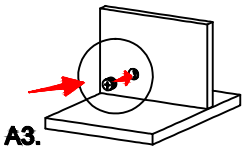

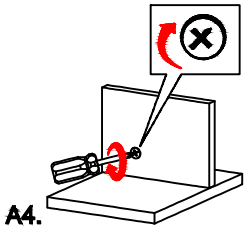

CAUTION:Please confim the parts list before installtion

YOU MAY NEED (NOT SUPPLIED)

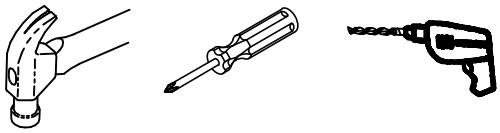

Step:1

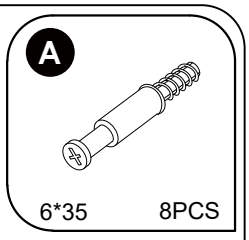
A
6*35
8PCS

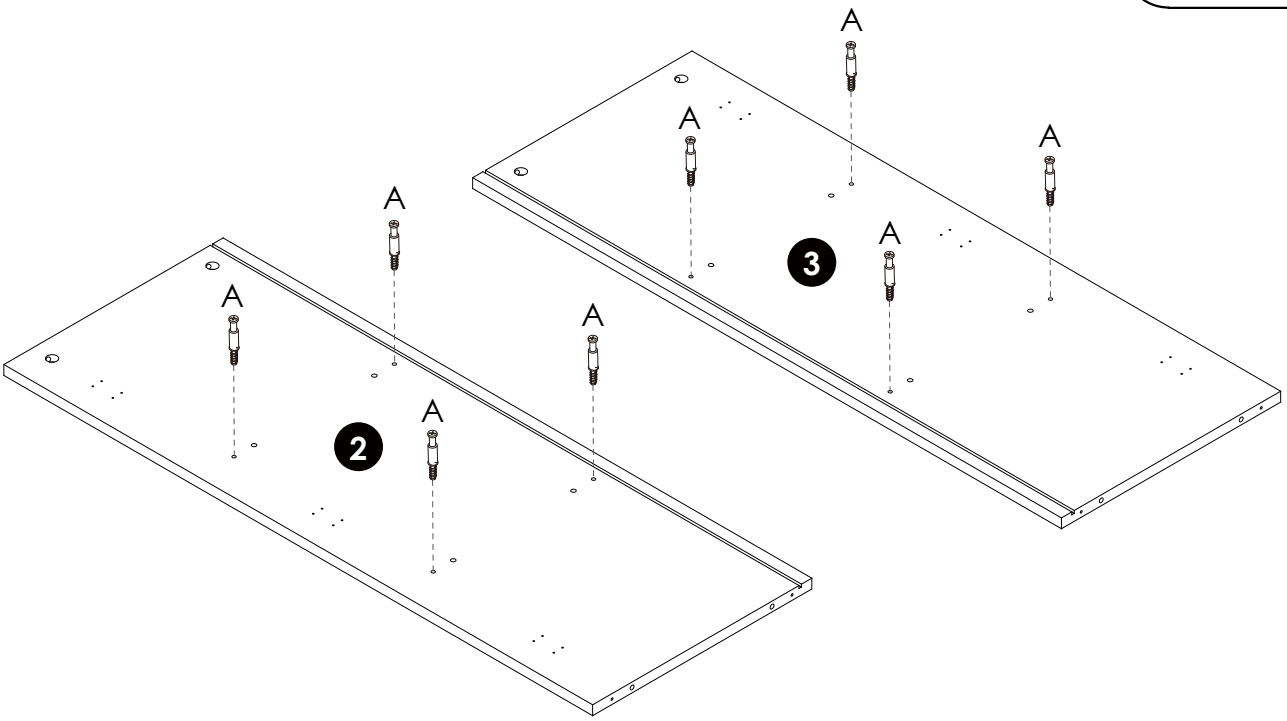
A
A
A
A
A
A
A
A
2
3

Step:2

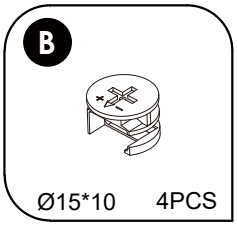
B
Ø15*10
4PCS

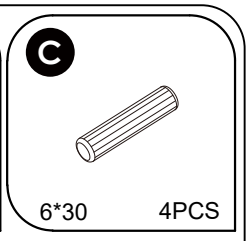
C
6*30
4PCS

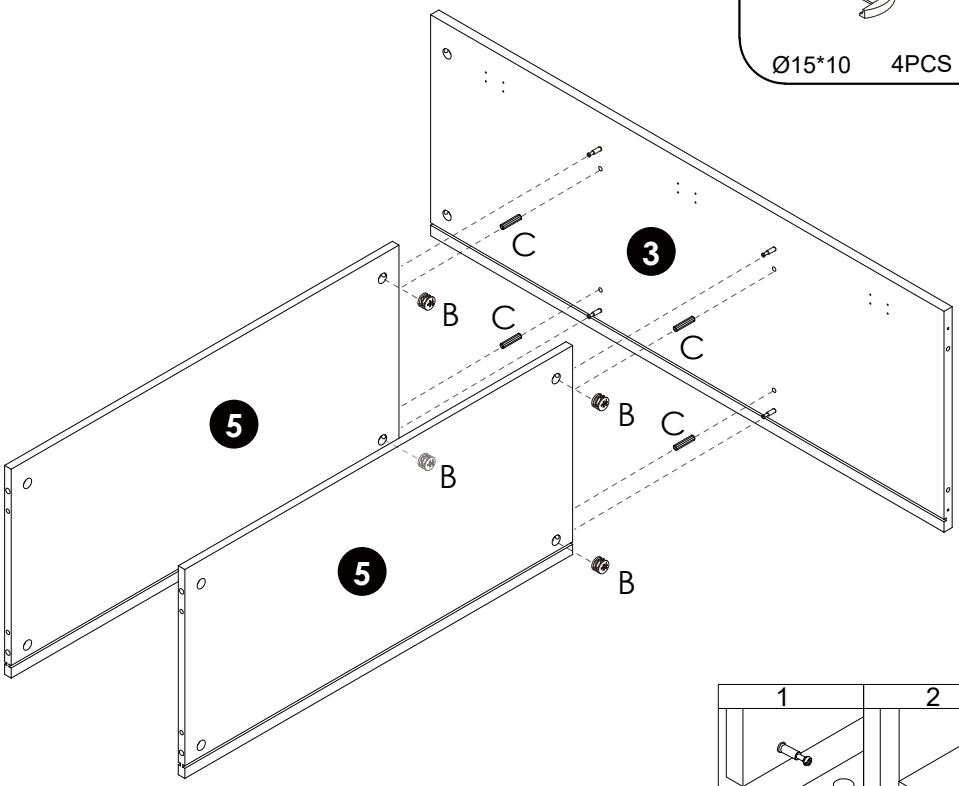
C
3
B
C
C
B
C
5
B
5
B

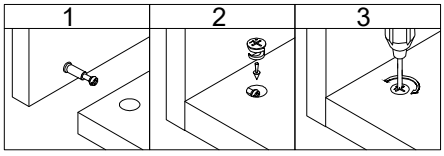
1
2
3

Step:3

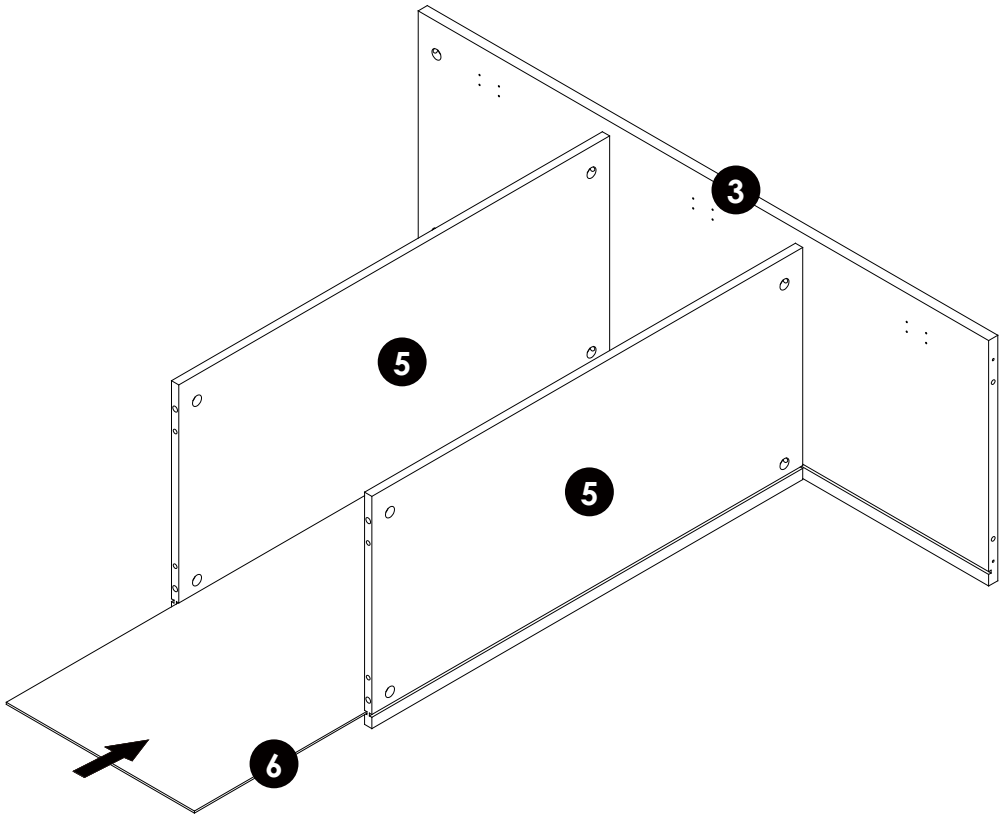

Step:4

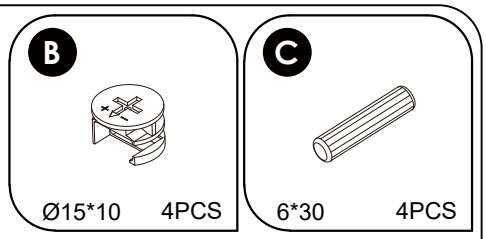

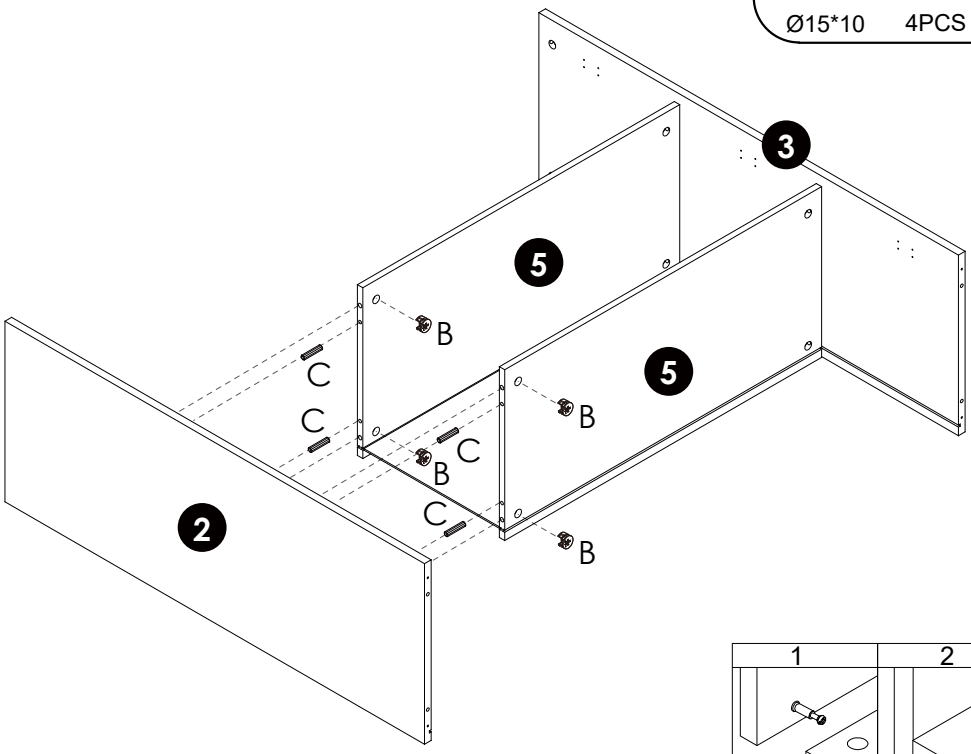

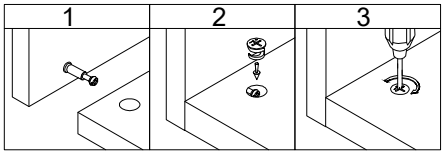

Step:5

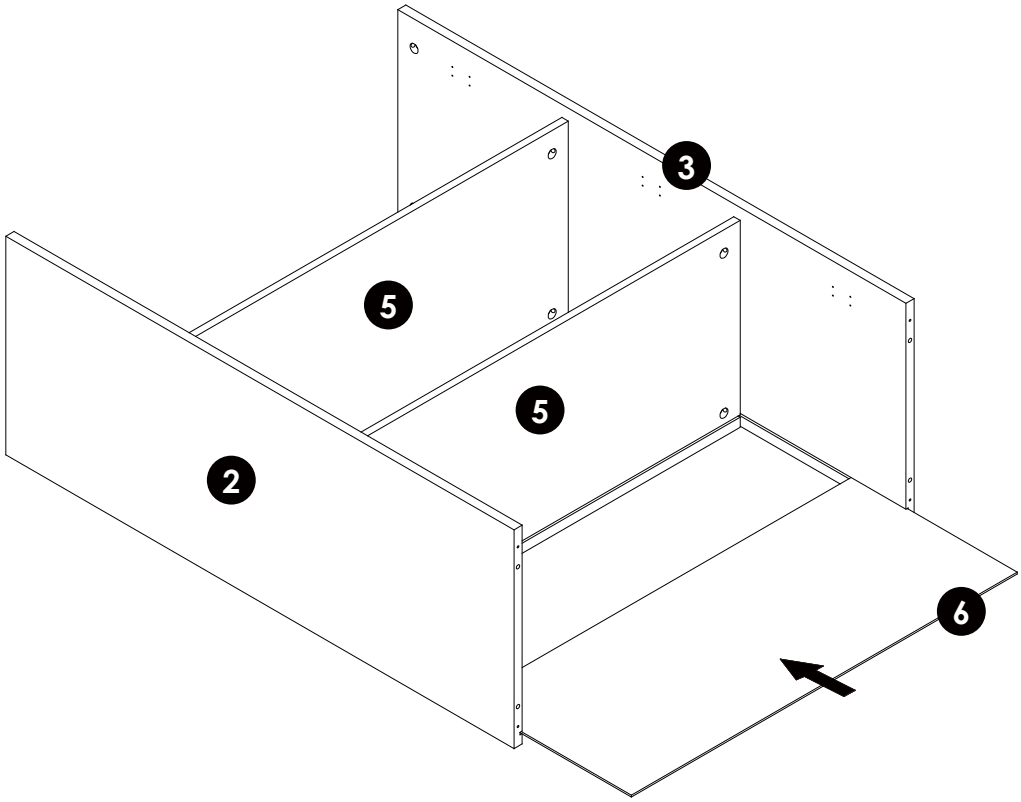

Step:6

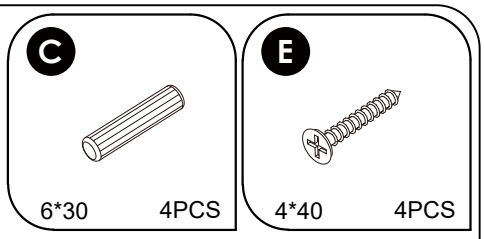

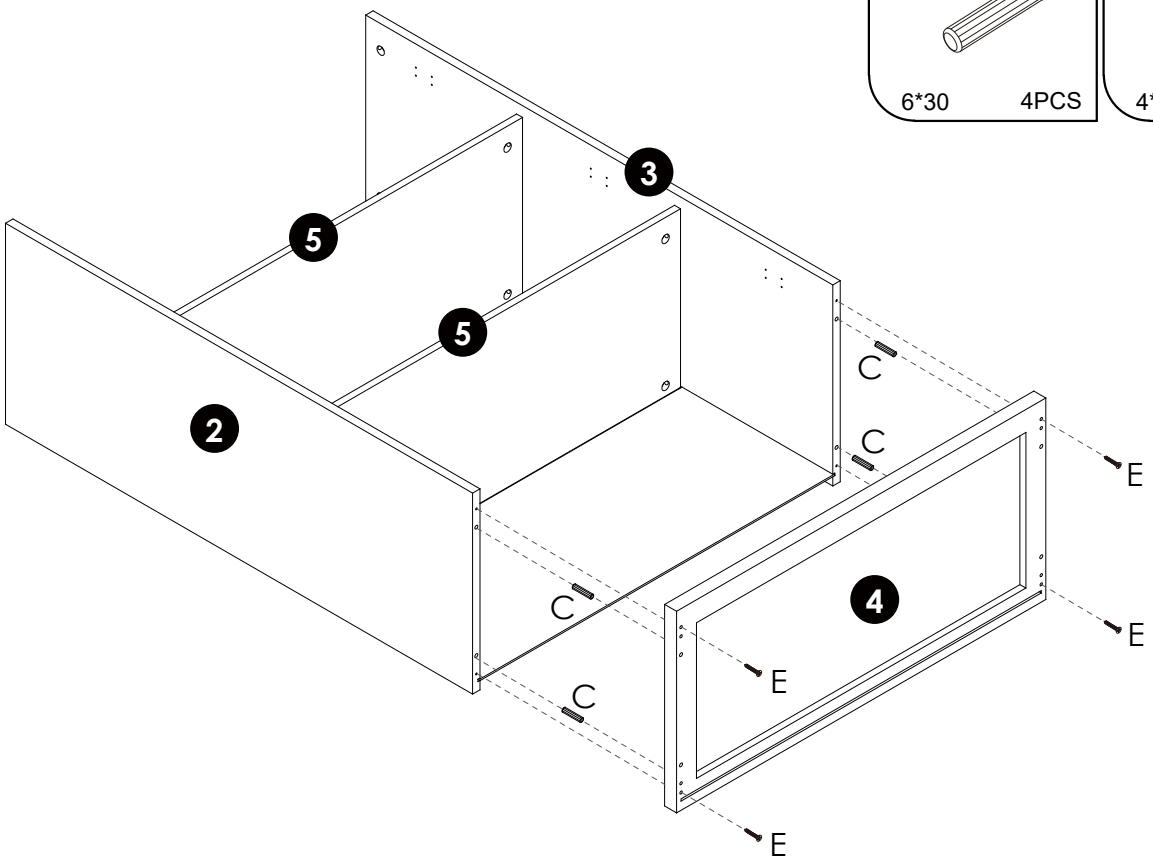

Step:7

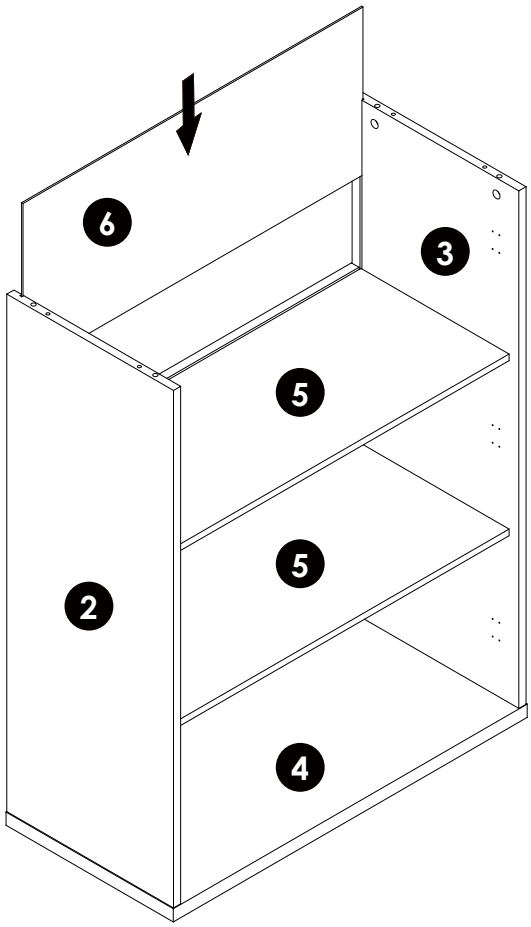

Step:8

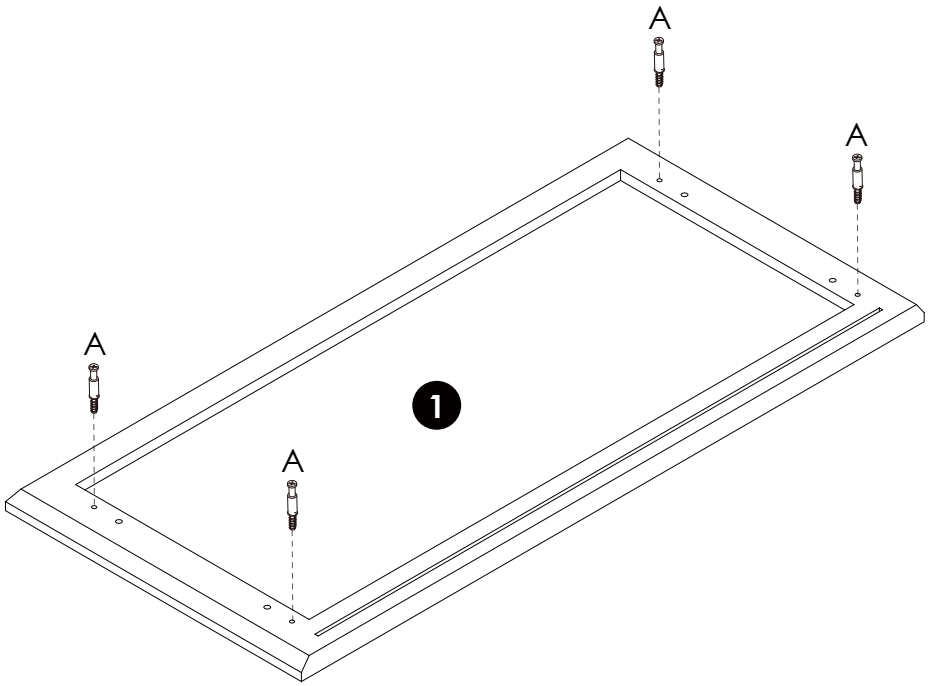

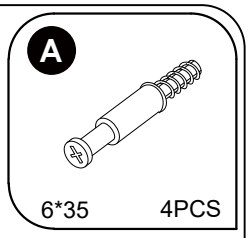

Step:9

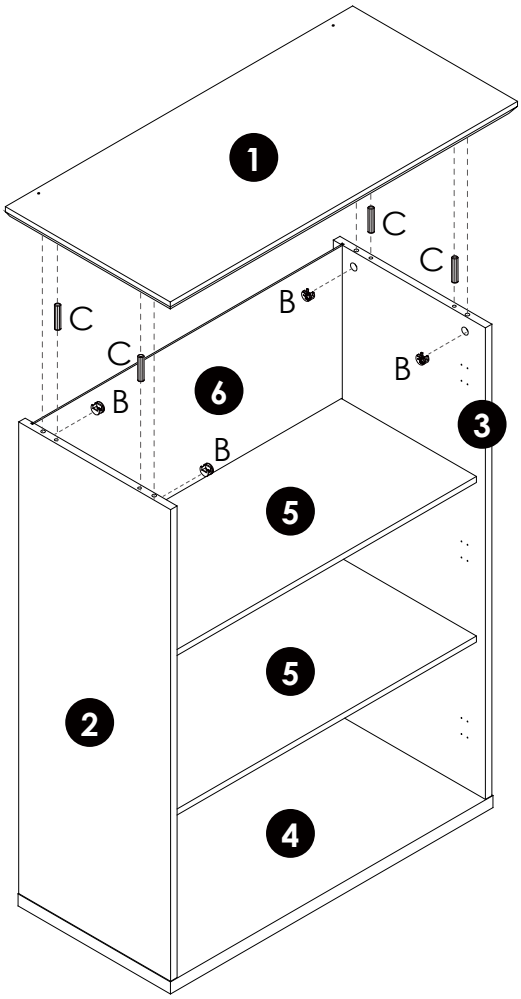

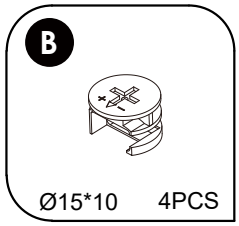

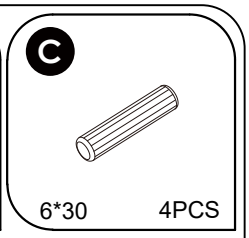

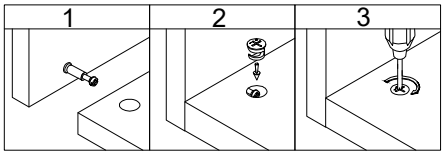

Step:10

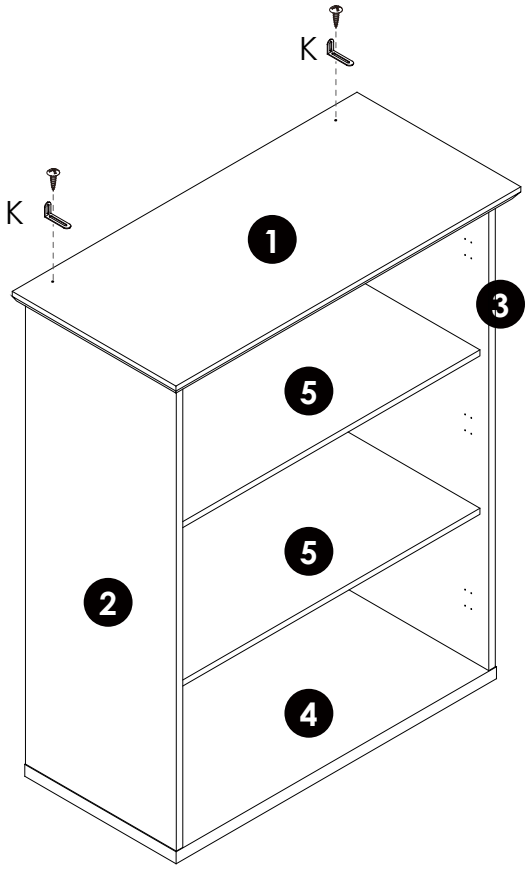

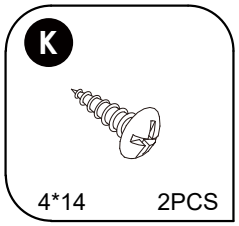

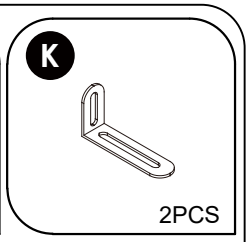

Step:11

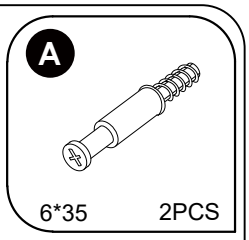

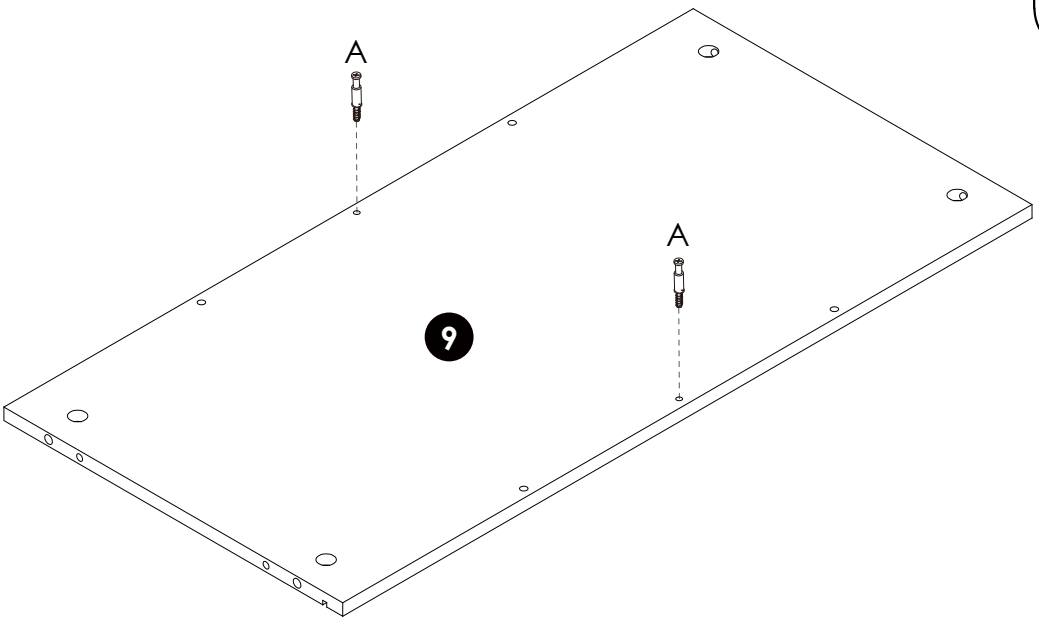

Step:12

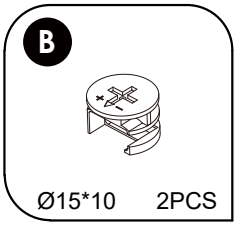

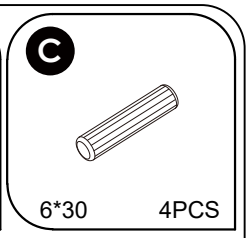

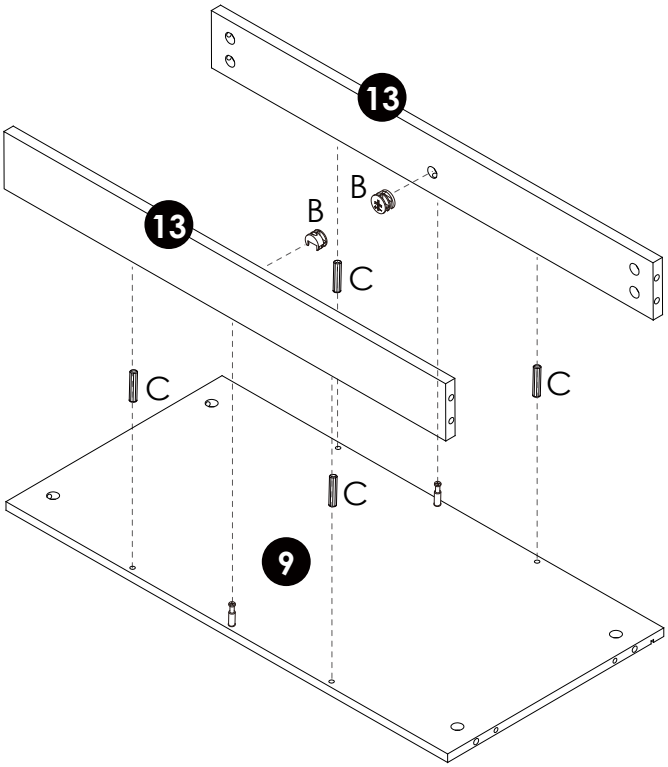

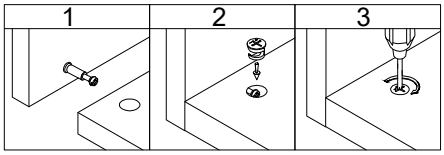

Step:13

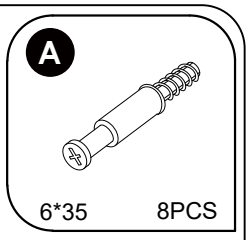

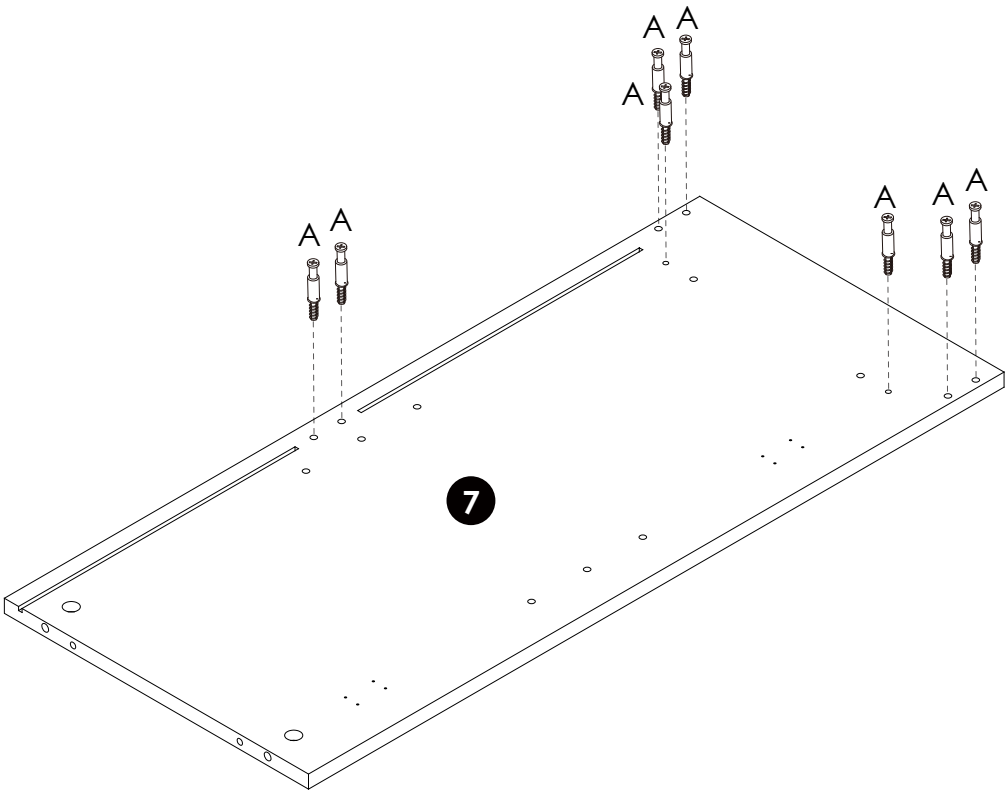

Step:14

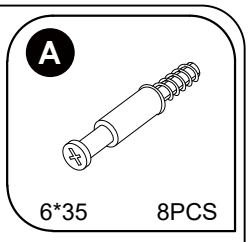

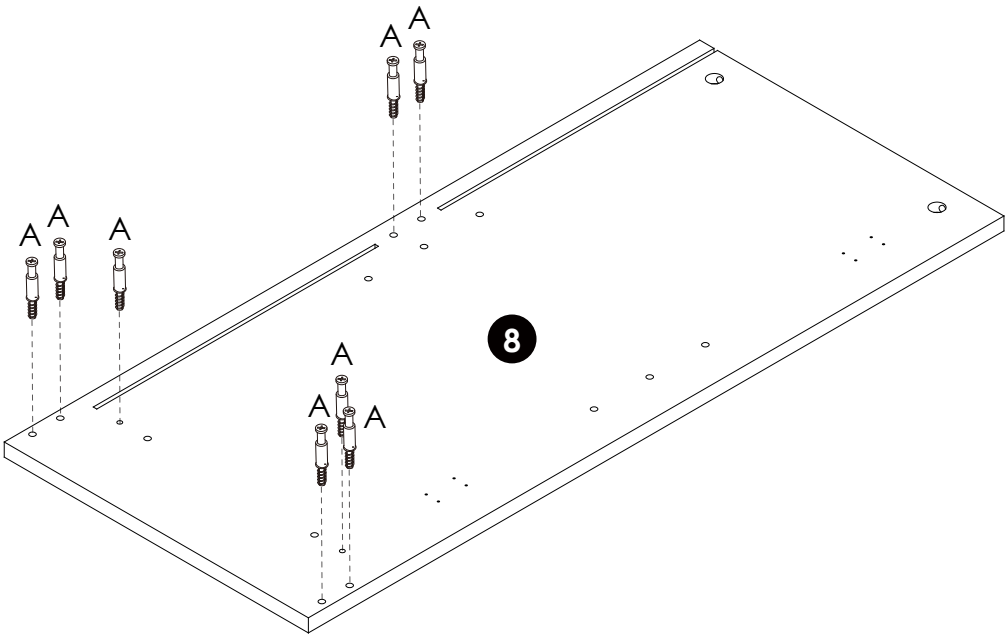

Step:15

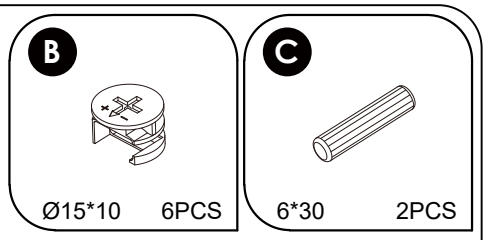

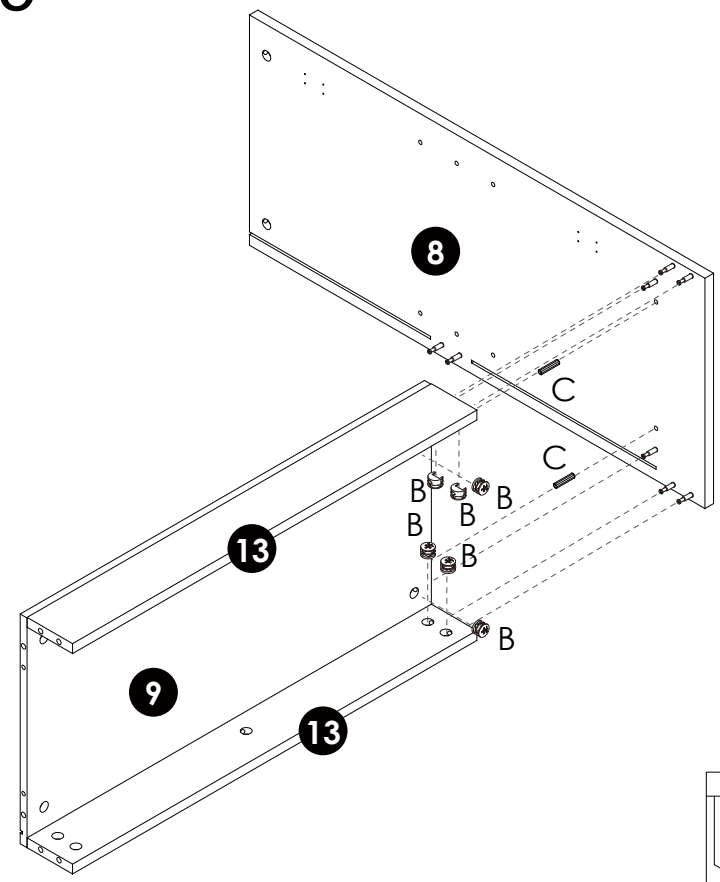

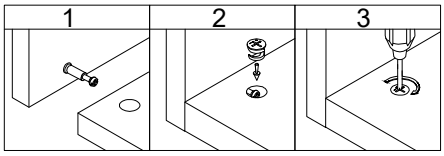

Step:16

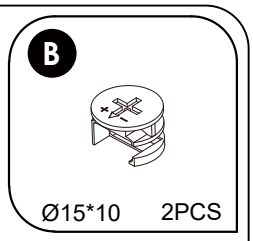

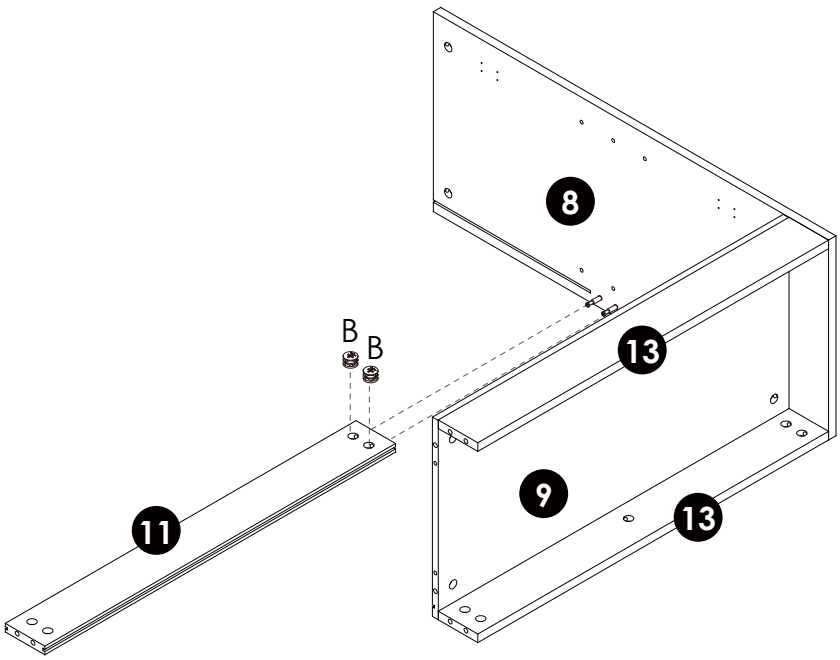

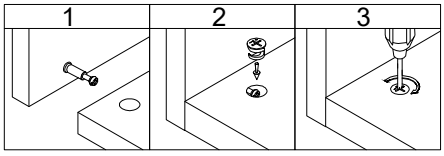

Step:17

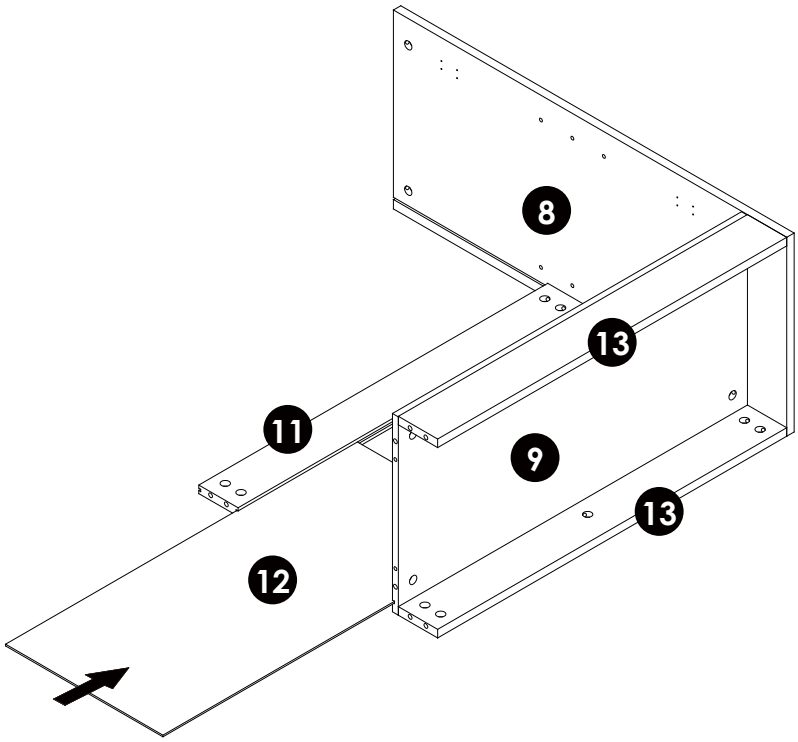

Step:18

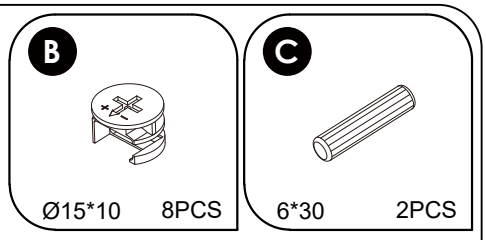

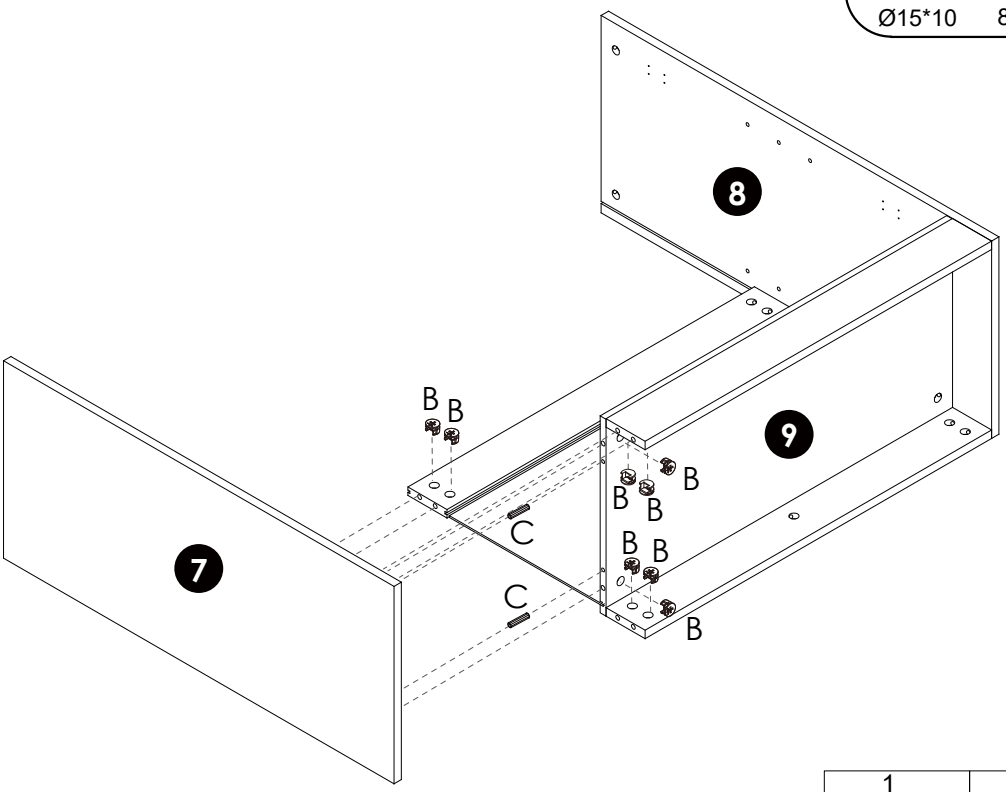

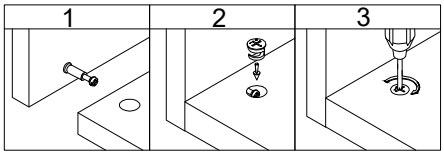

Step:19

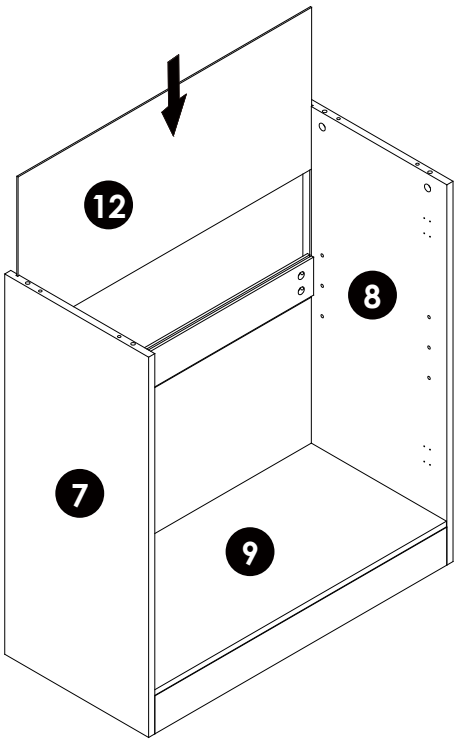

Step:20

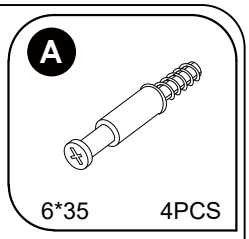

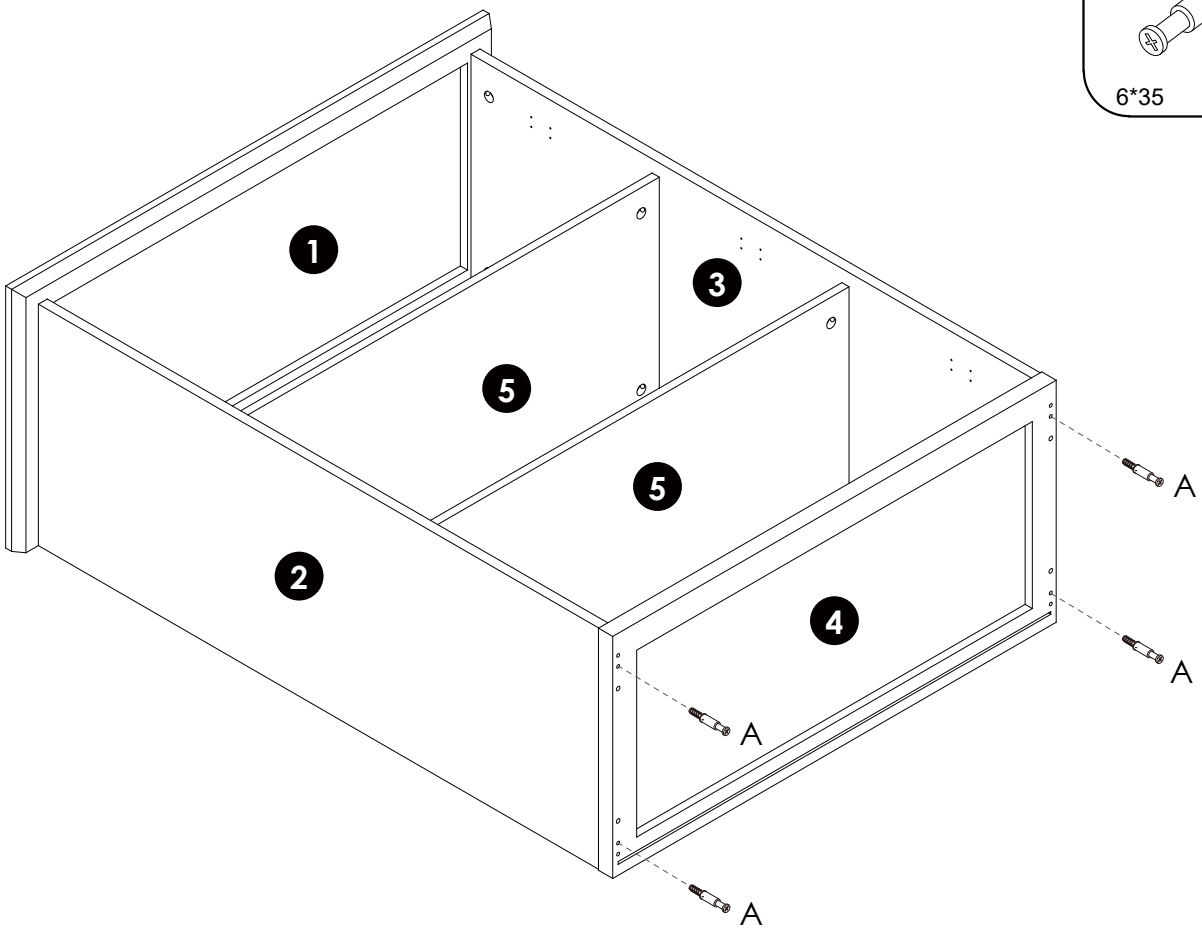

Step:21

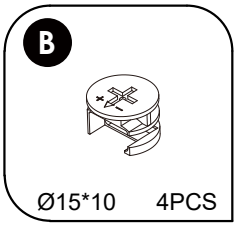

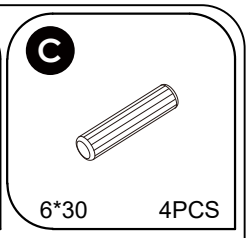

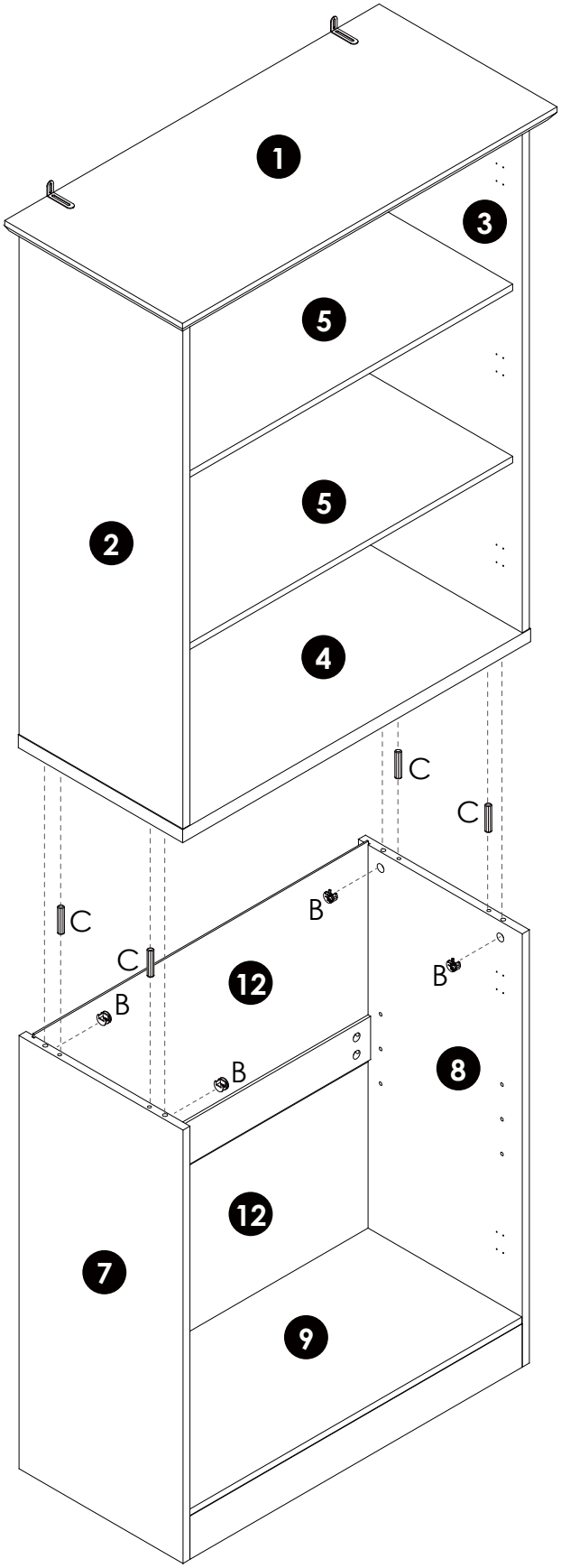

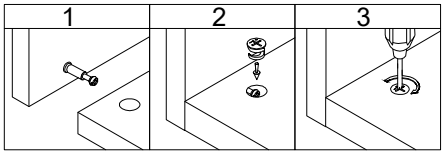

Step:22

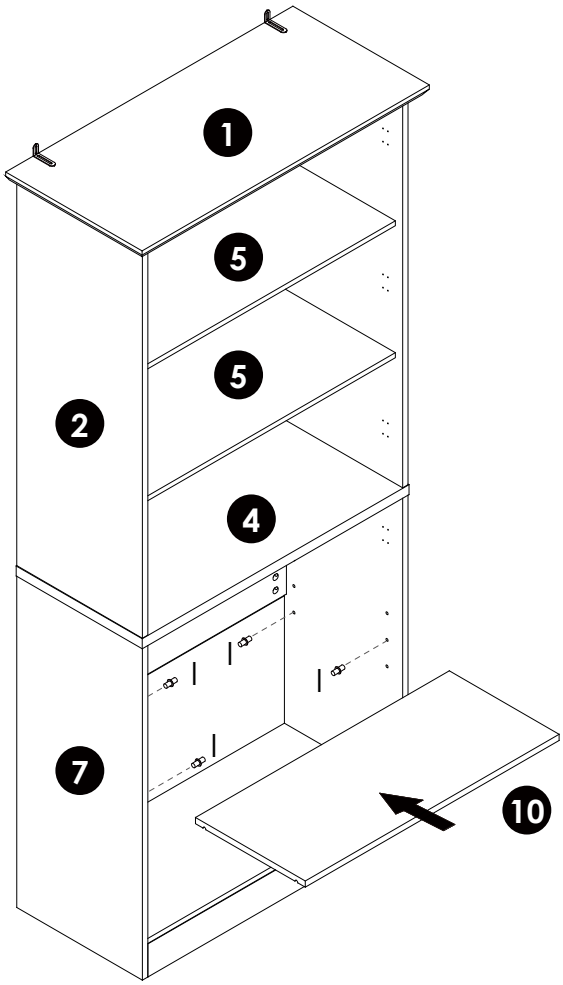

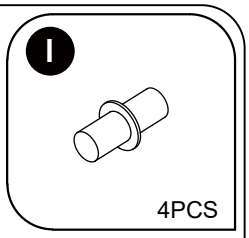

Step:23

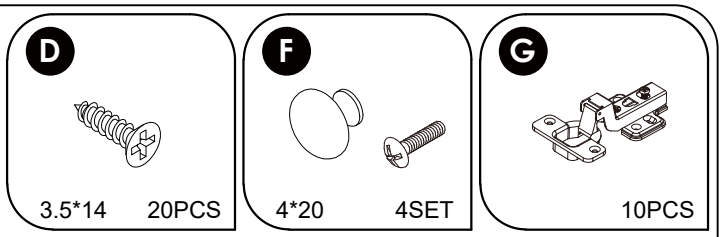

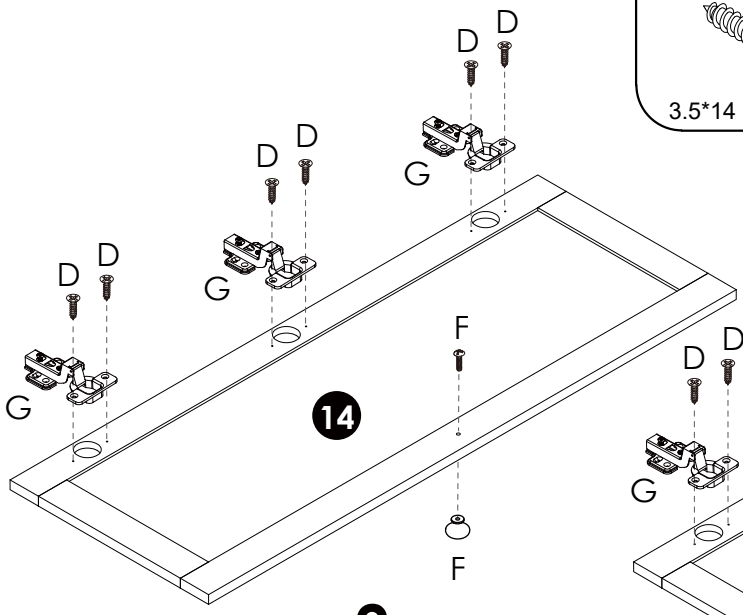

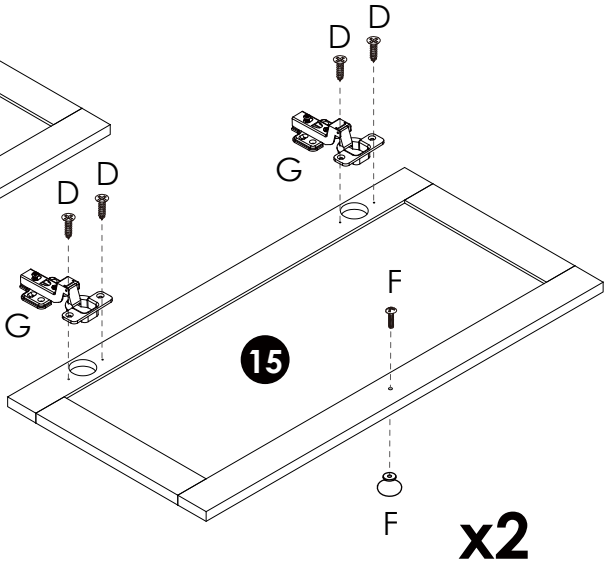

Step:24

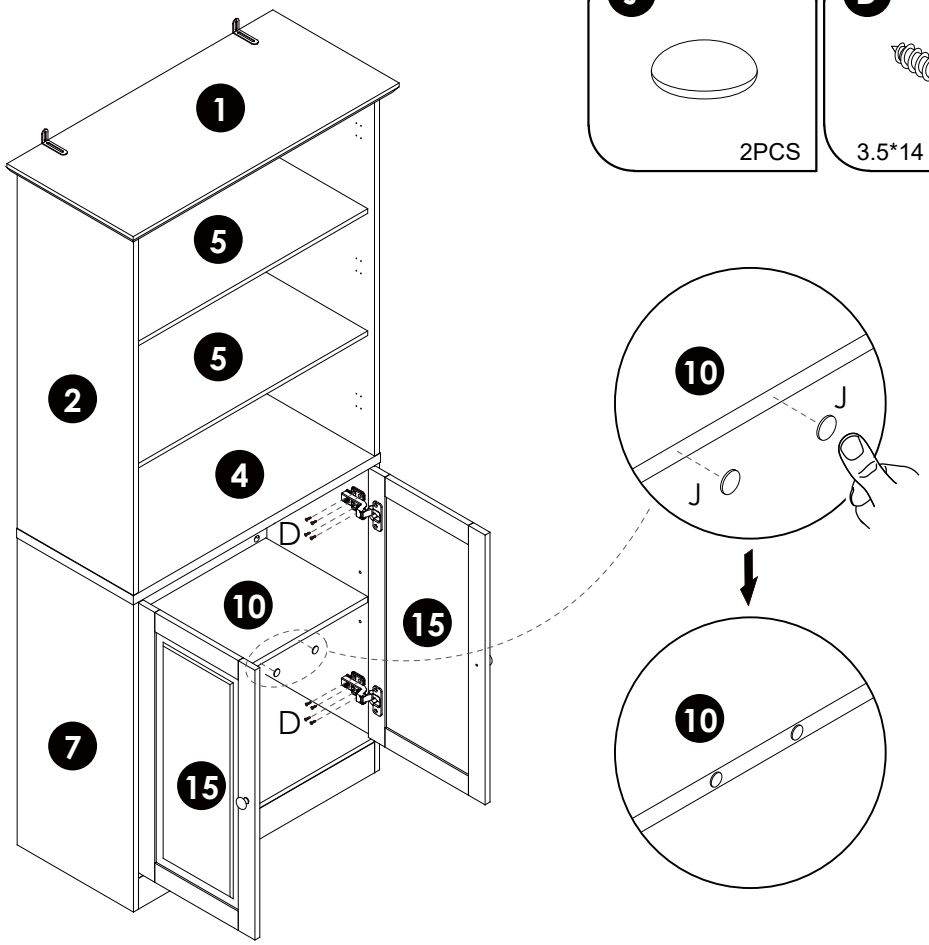

Step:25

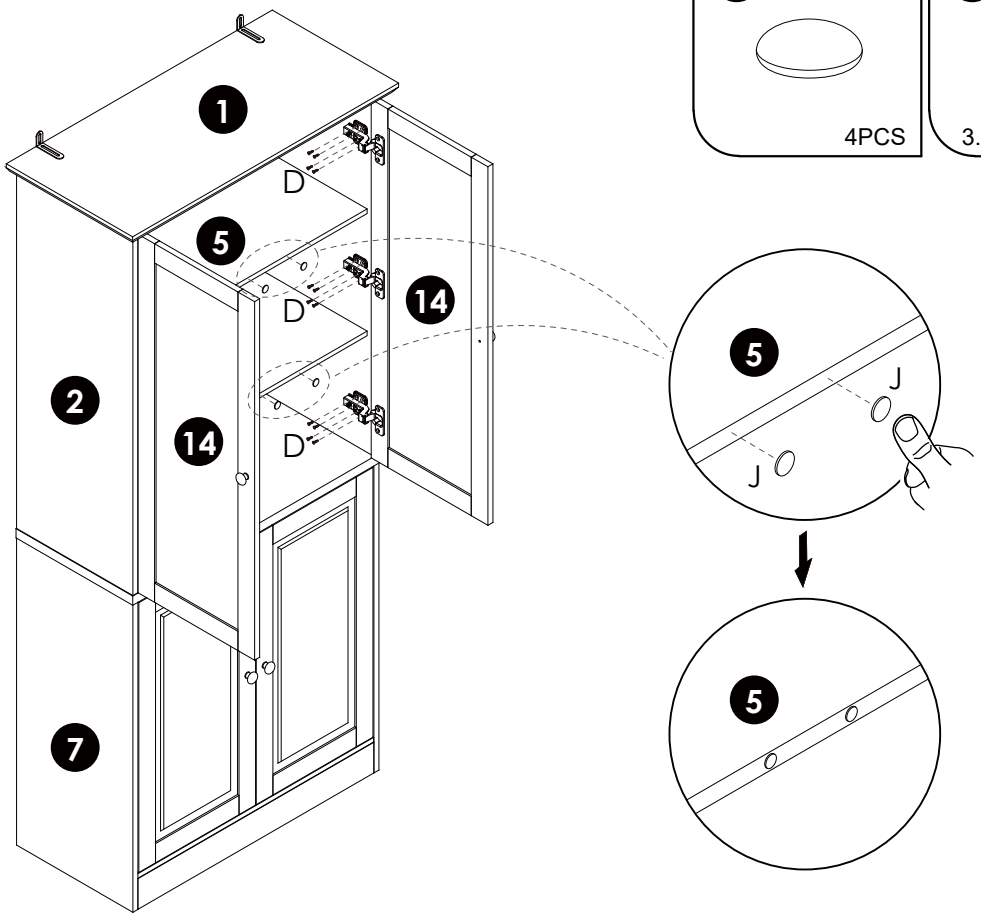

Step:26

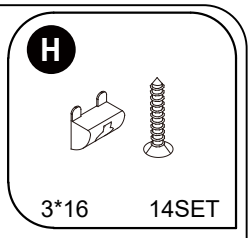

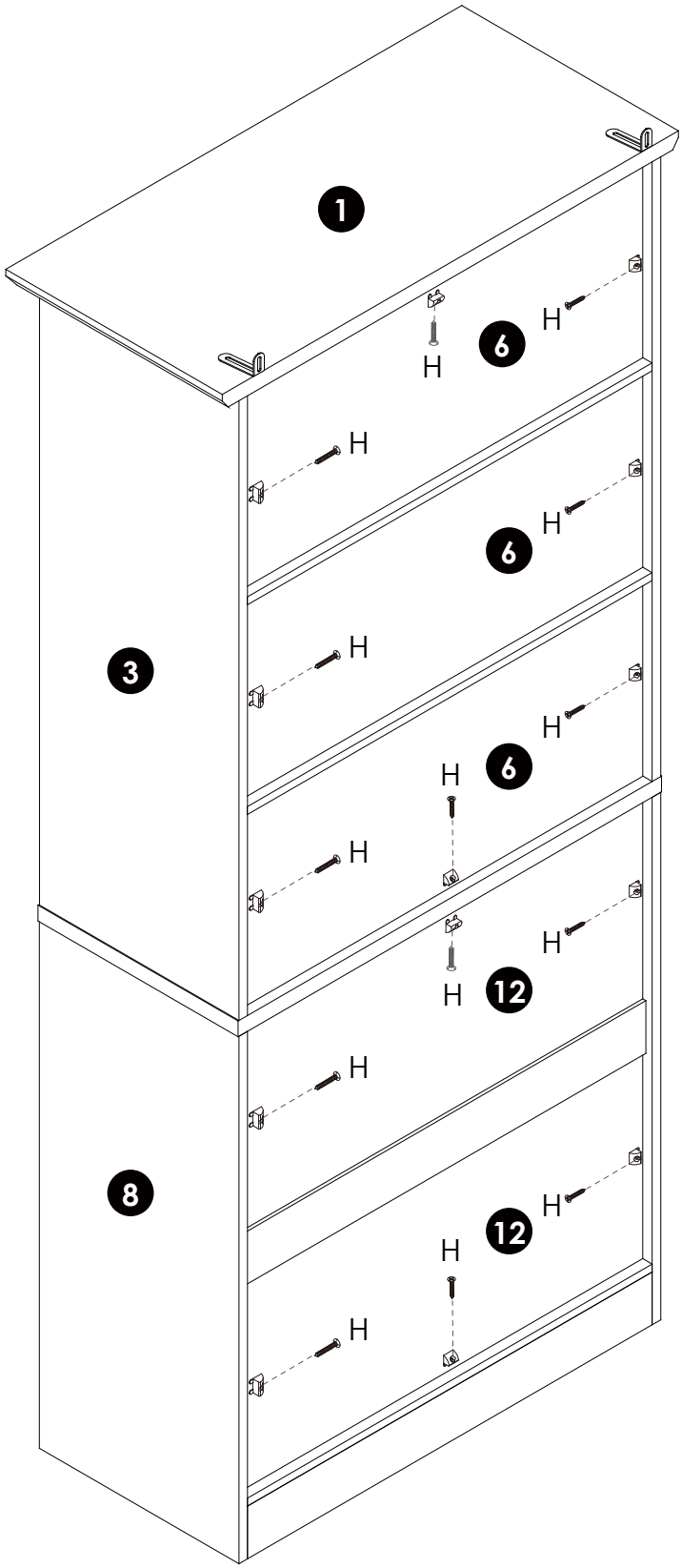
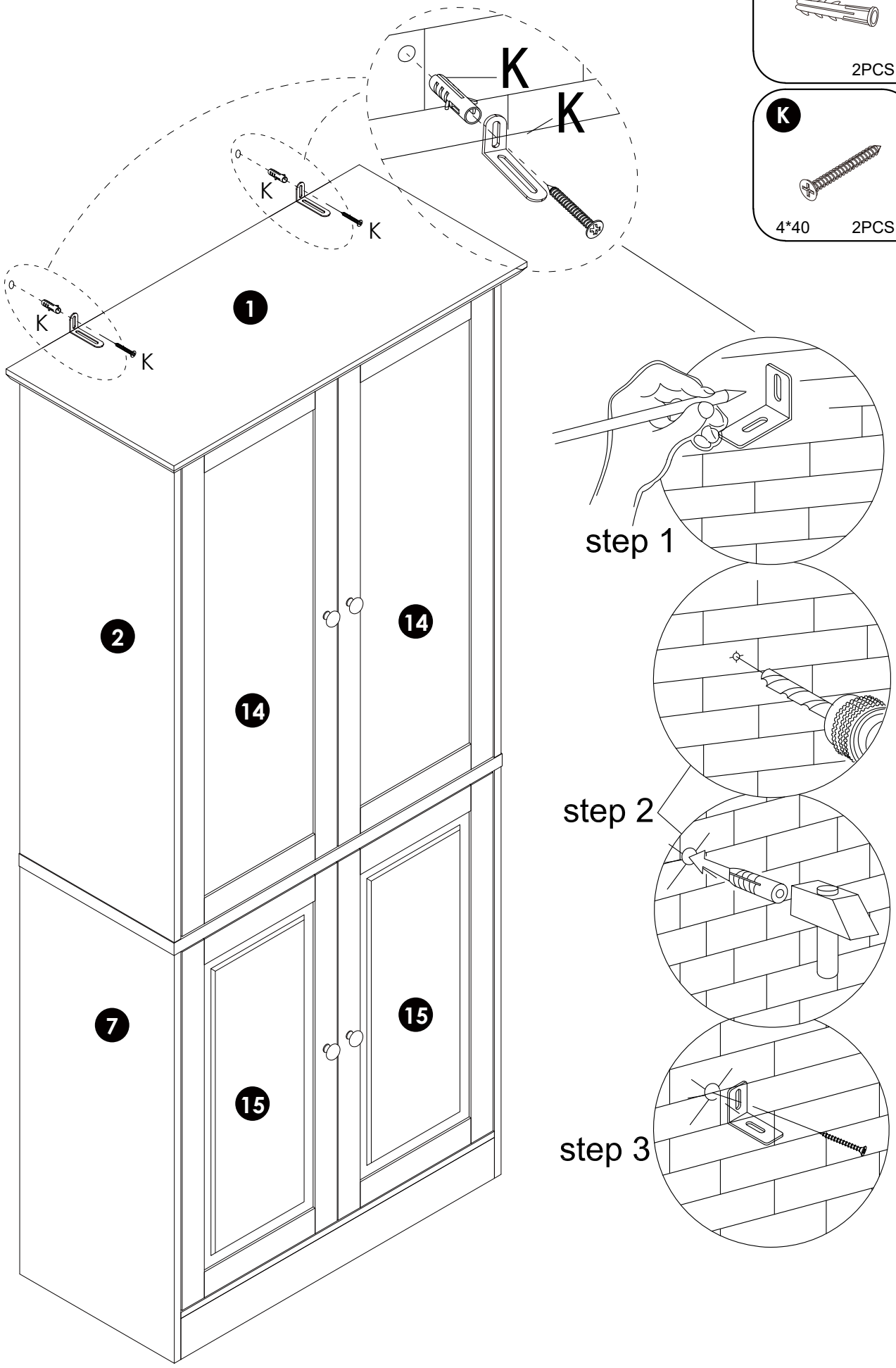
Step:27