ASSEMBLY INSTRUCTIONS

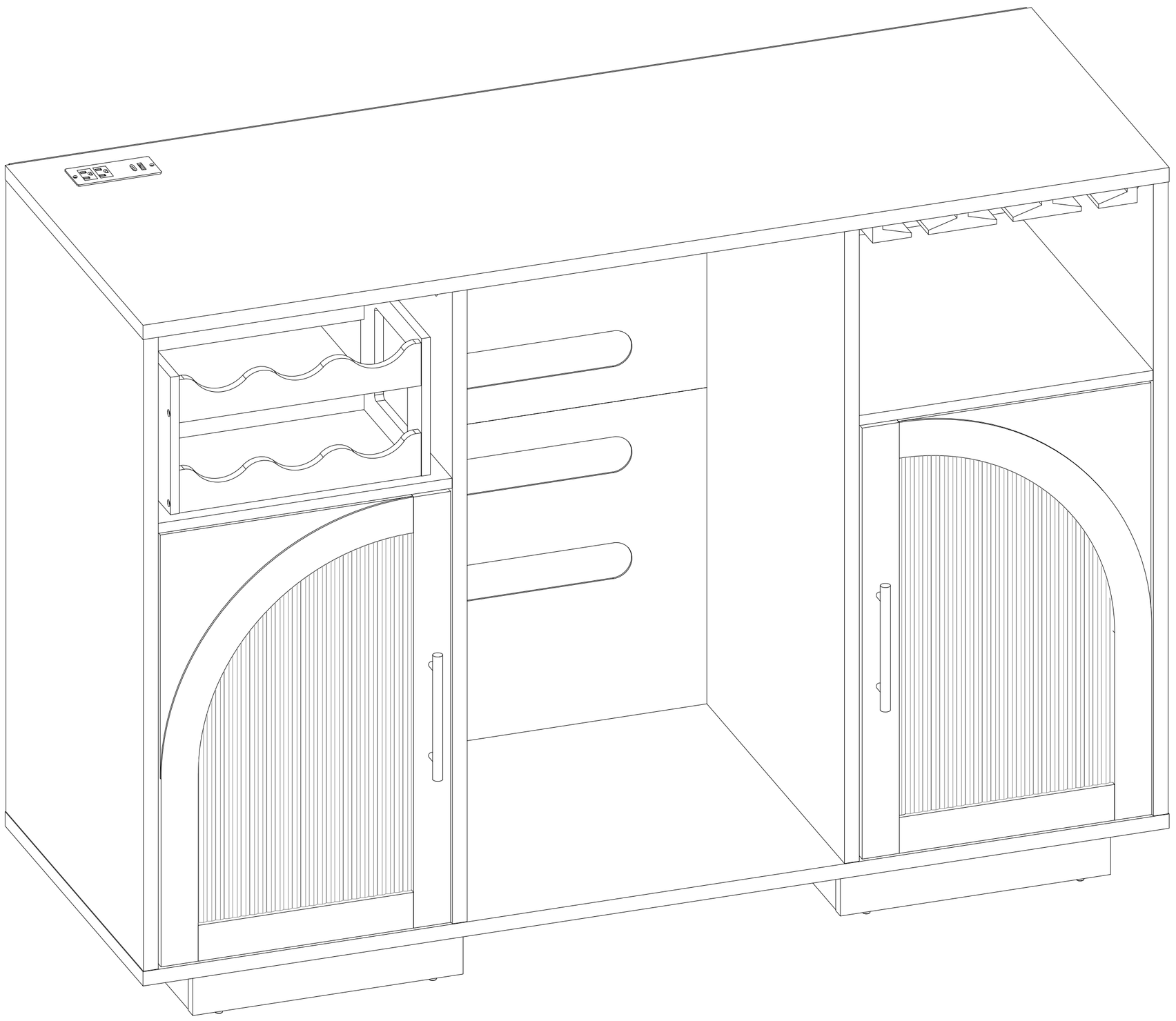

PARTS INCLUDED

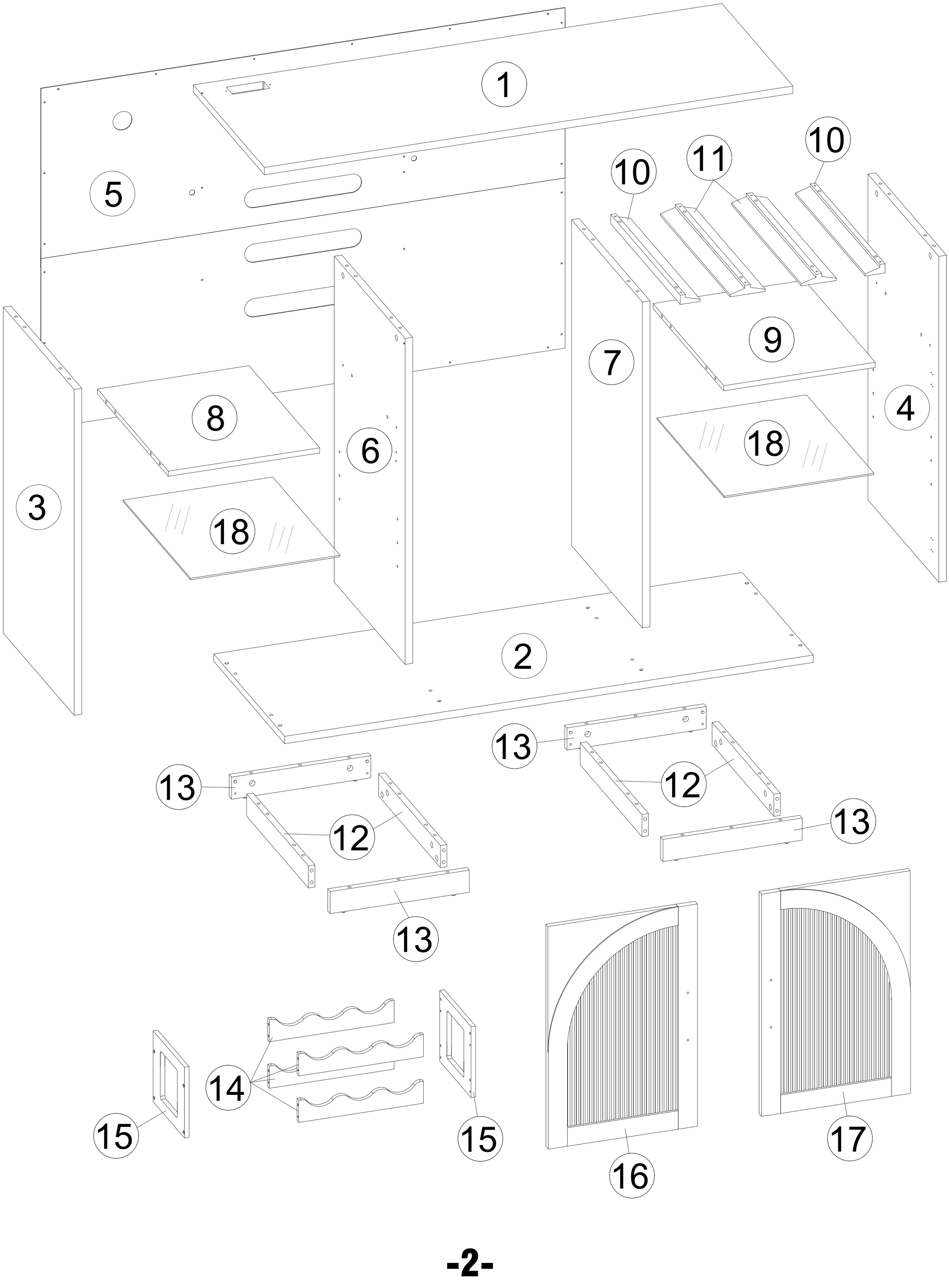

HARDWARE INCLUDED

ϕ7.8X30MM 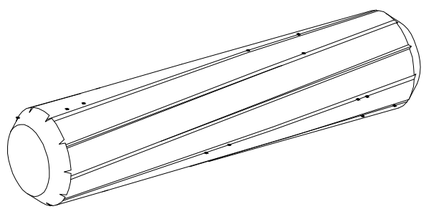 **A** 52X+2	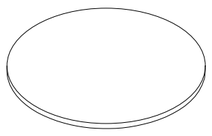 **B** 8X+1	ϕ6X34MM 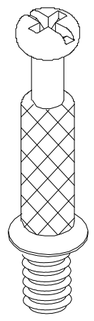 **C** 40X+2	ϕ15X12MM 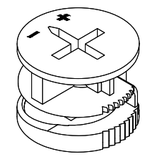 **D** 40X+2
ϕ5/32"X25MM 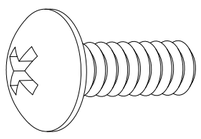 **E** 4X	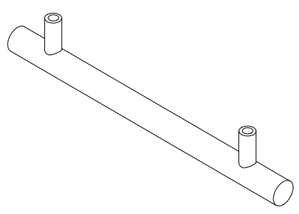 **F** 2X	ϕ4X50MM 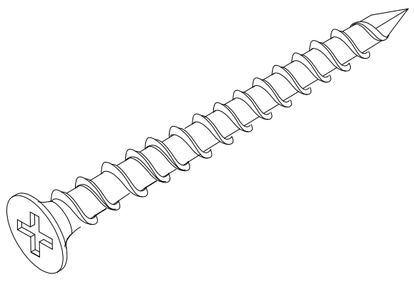 **G** 8X+1	ϕ4X32MM 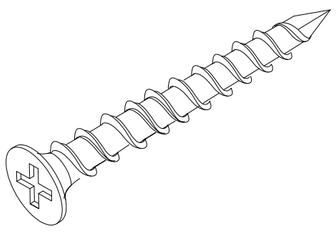 **H** 16X+1
ϕ3.5X15MM 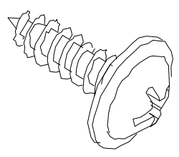 **I** 32X+1	 **J** 2X	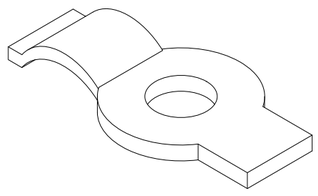 **K** 7X+1	ϕ3X10MM Included In Insert Screws 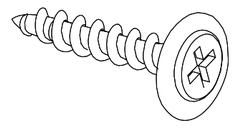 **L** 7X+1
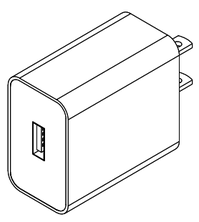 **M** 1X	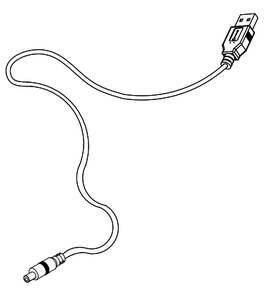 **N** 1X	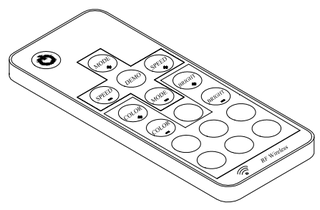 Remote Control **O** 1X	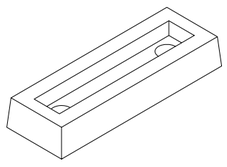 **P** 2X
ϕ3X12MM 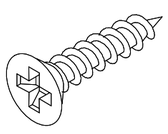 **Q** 4X+1	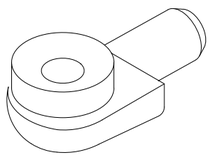 **R** 8X+1	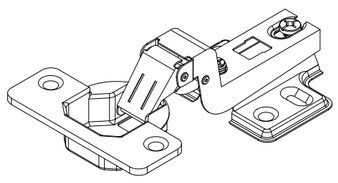 **S** 4X	ϕ4X14MM 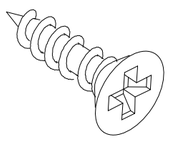 **T** 24X+1
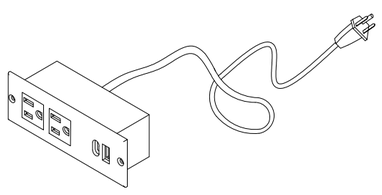 **U** 1X	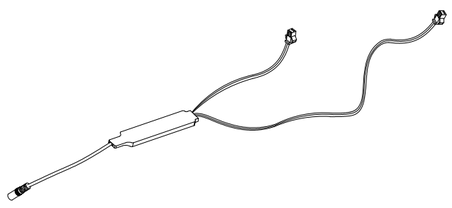 **V** 1X	ϕ3X15MM 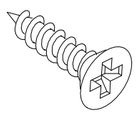 **W** 2X+1	ϕ5.8X30MM 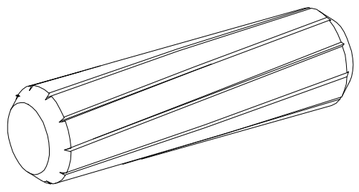 **X** 8X+1	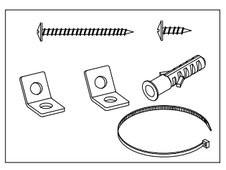 **Y** 2X

HOW TO USE THE CAM LOCK SYSTEM

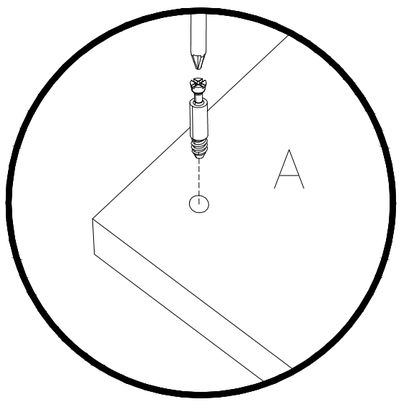

1. Screw the cam bolt into the panel.

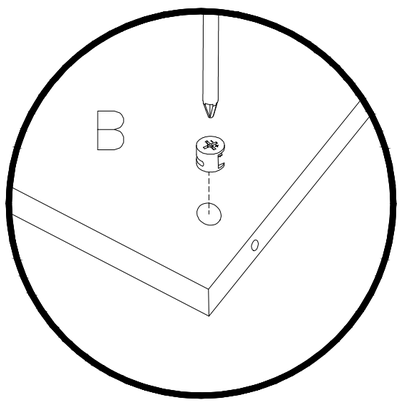

2. Insert the cam lock with the arrow pointing toward the panel edge.

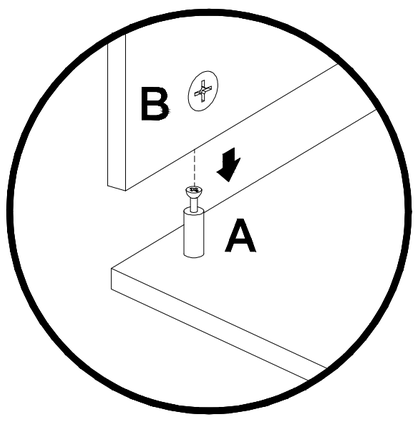

3. Align the cam bolt with the cam lock and fully insert it into the cross-bored hole.

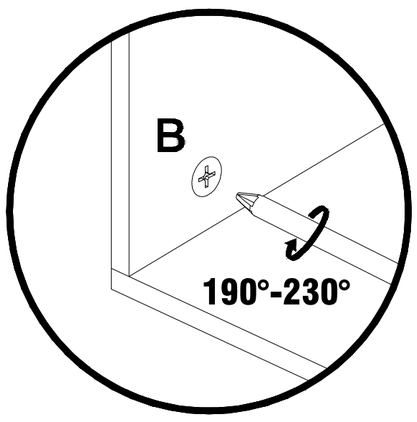

4. Turn the cam lock clockwise 190-230 degrees to secure the panels.

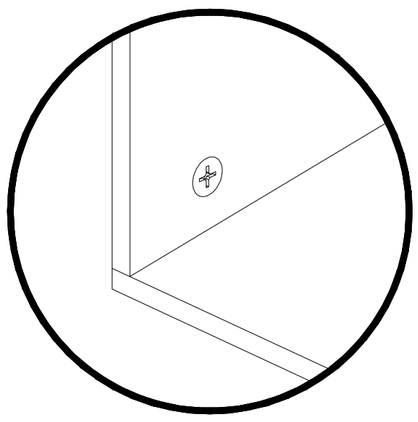

5. Confirm the panels are tight and the joint is rigid.

Insert wood dowel (A) at least halfway. Tap lightly with a rubber mallet only if necessary.

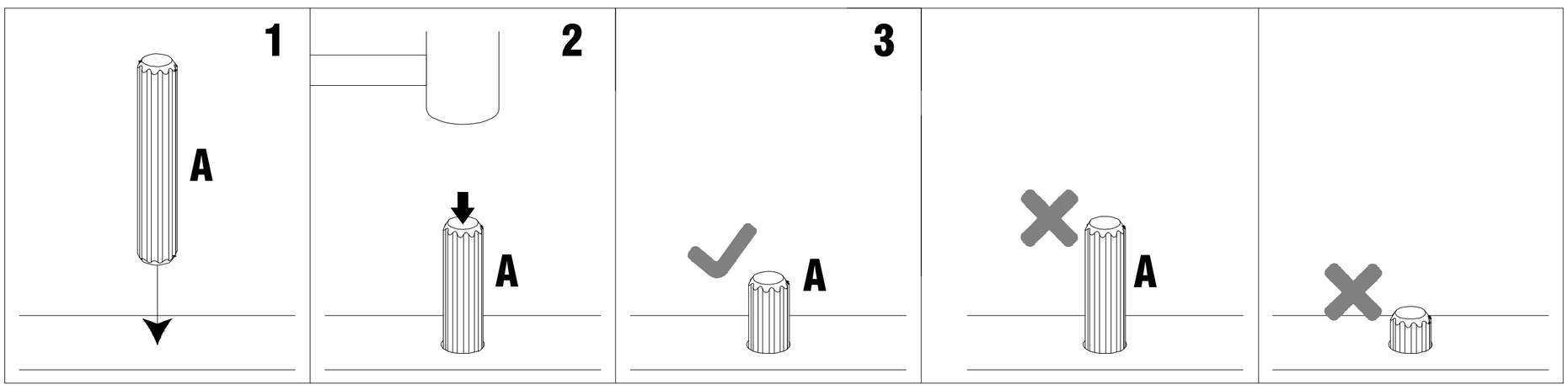

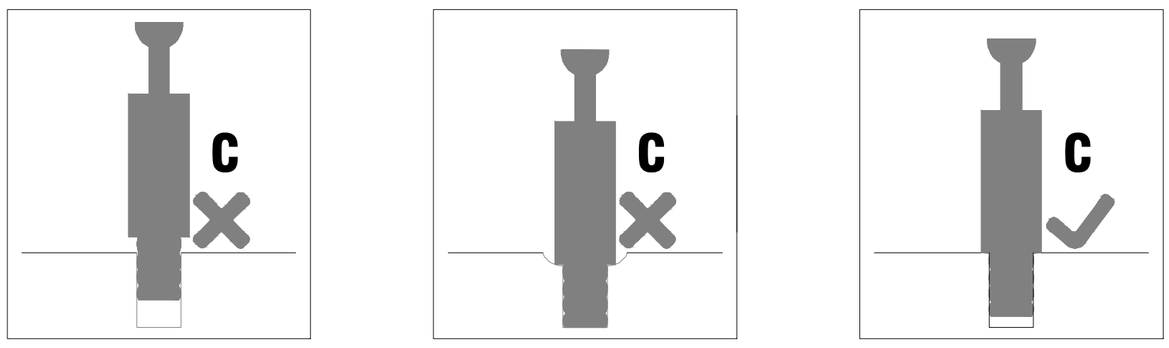

⚠ WARNING

- Place the unit on a level surface; use the included levelers when applicable.
- Do not sit or stand on the unit, and do not allow children to climb on it.
- Install the anti-tip restraint and secure the unit to the wall before use.
- A tipping unit can cause serious injury or death.
- Do not exceed the stated weight limits.
- Distribute weight evenly and place heavier items on lower shelves.
- Before drilling, verify the locations of electrical wiring, plumbing, and gas lines.

ASSEMBLY OVERVIEW

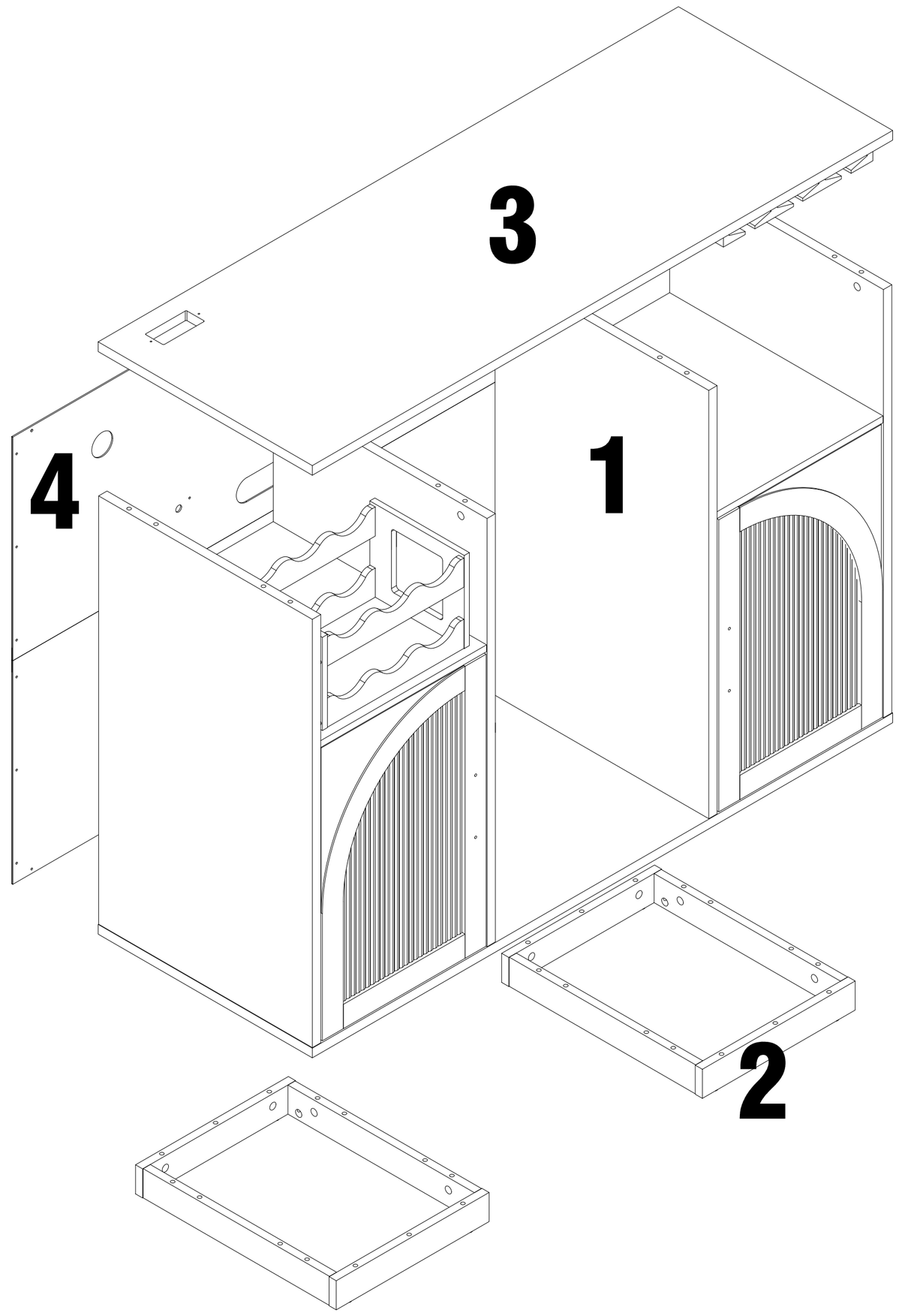

ASSEMBLY SEQUENCE

1. Assemble the cabinet body.

2. Assemble the base frames.

3. Attach the top panel.

4. Attach the back panel.

BEFORE YOU BEGIN

- Two adults are required for safe assembly.

- Use a Phillips screwdriver. A low-torque electric screwdriver is optional.

- Assemble on a clean, soft surface.

- Check all parts and hardware before starting.

- Secure the completed unit to the wall before use.

STEP 1

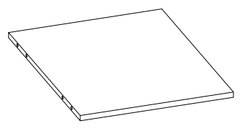 8 X1	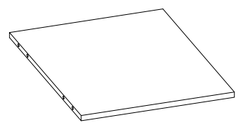 9 X1
 J X2	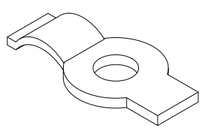 K X6
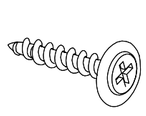 L X6	

ACTION

- For a temporary test, connect both strips J to controller V, connect V to cable N, then connect N to adapter M. Plug in only long enough to confirm both strips illuminate, then disconnect all power.
- Clean and dry the unfinished faces of panels 8 and 9. Remove the adhesive liner and apply each strip straight in the position shown.
- Install the strips as mirror images. Route both cable exits toward the back exactly as illustrated.
- Secure loose cable sections with clips K and screws L. Do not place a clip over an LED, bend, or connector.

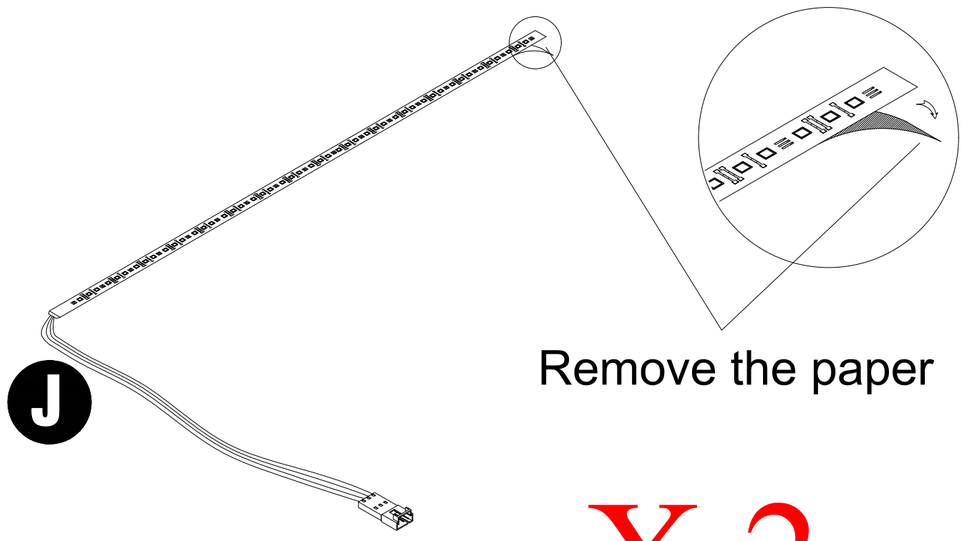

X 2

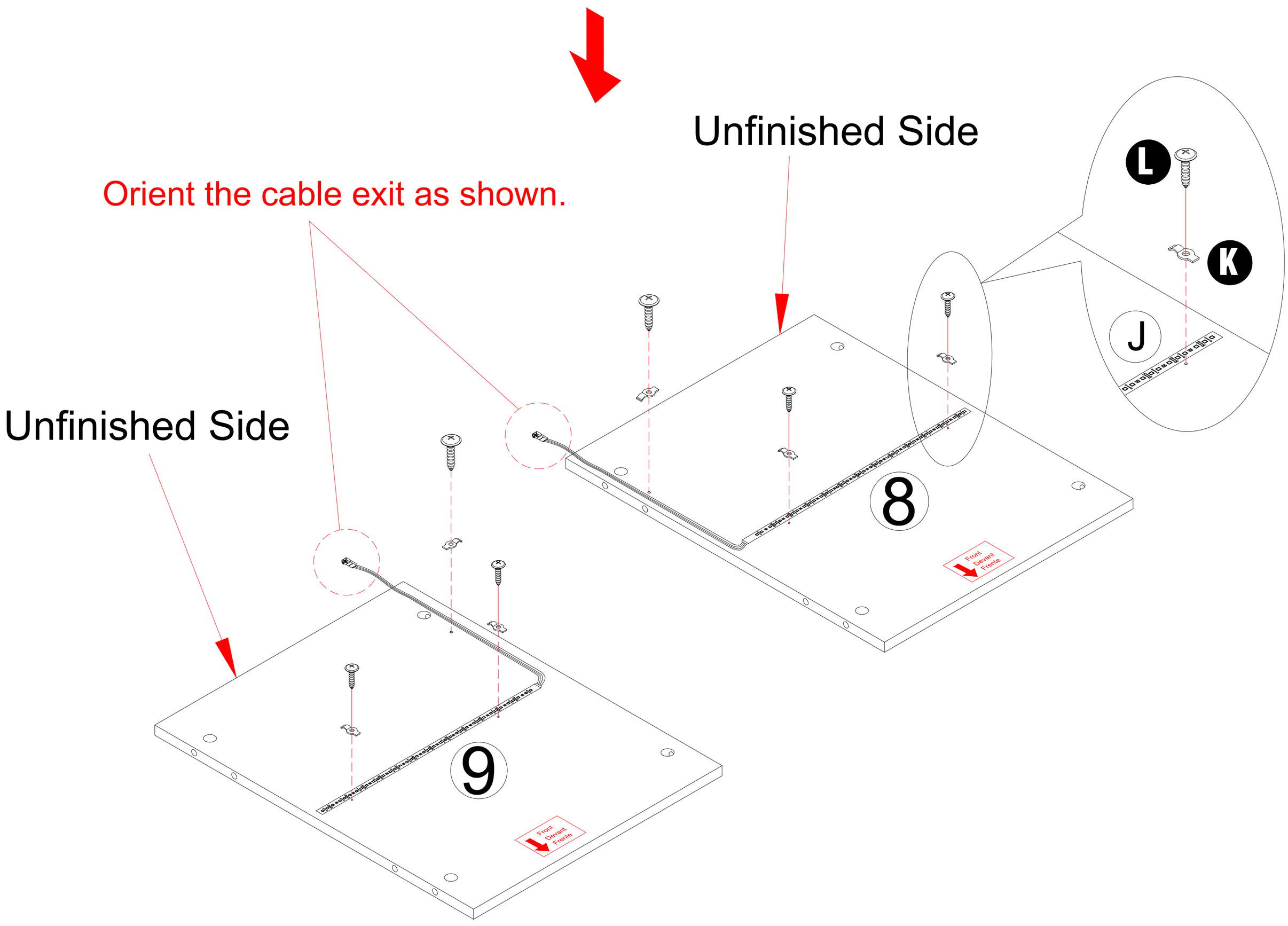

STEP 2

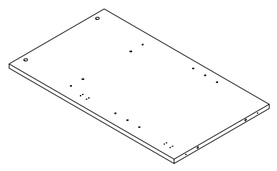 3 X1	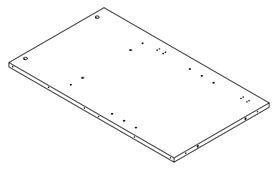 4 X1	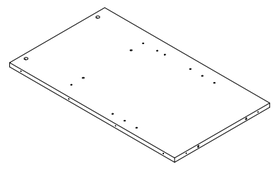 6 X1	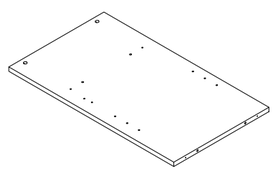 7 X1
 C X8	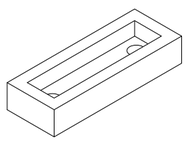 P X2	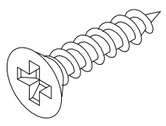 Q X4	

ACTION

- Orient all four panels using the red Front arrows, then thread eight cam bolts C into the indicated small pilot holes.
- Position one stop P on panel 6 and one on panel 7. Fasten each stop with two screws Q so the two sides mirror each other.

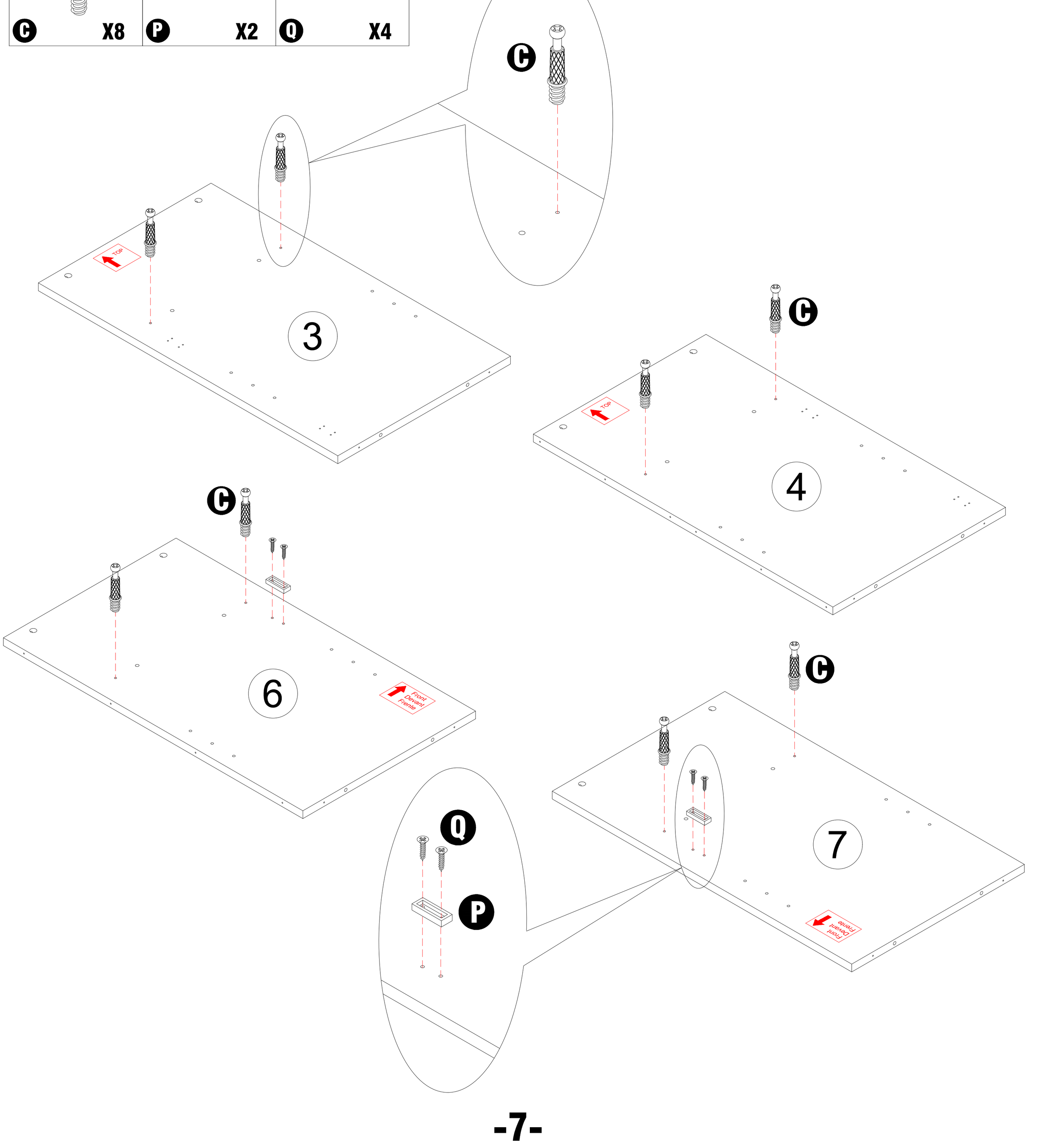

STEP 3

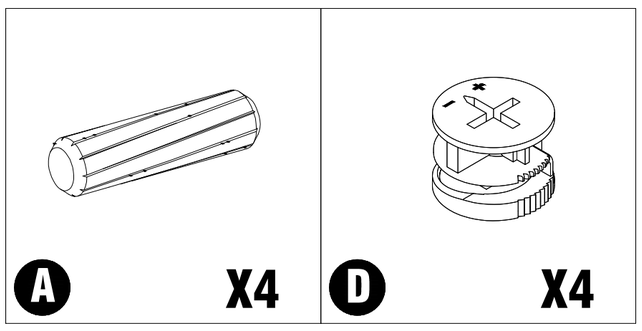

ACTION

- Place panel 8 with its unfinished face toward the cabinet interior and its LED lead toward the back.
- The small pilot holes along the top edges of panels 3 and 6 must face upward and in the same direction.
- Insert dowels A first. Aim each cam lock D toward its cam bolt, bring the panels together squarely, and tighten D only after the joint is fully seated.

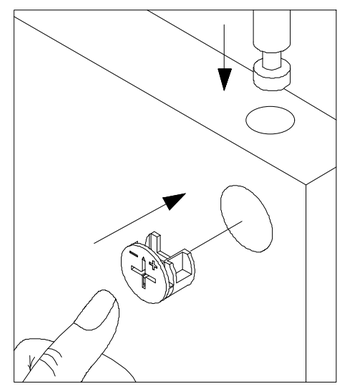

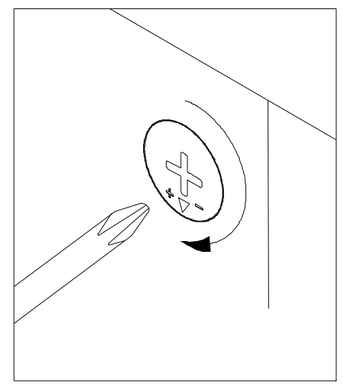

STEP 4

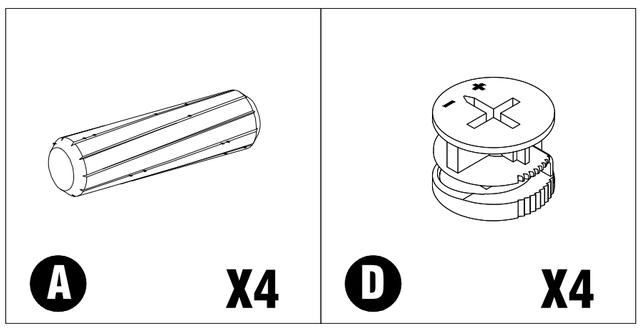

ACTION

- Repeat Step 3 as a mirror image. Keep the unfinished face of panel 9 toward the cabinet interior and its LED lead toward the back.
- Keep the top pilot holes on panels 4 and 7 facing upward in the same direction. Use A for alignment and D for locking.

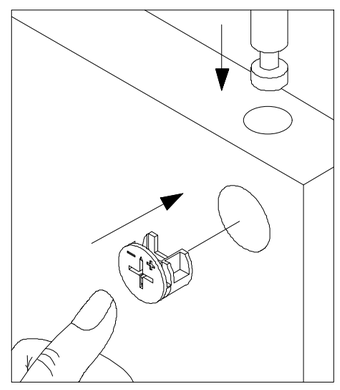

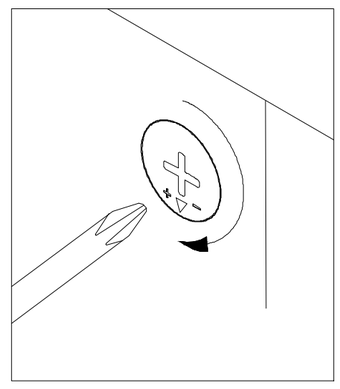

BACK SIDE

Pilot holes must face upward
and in the same direction.

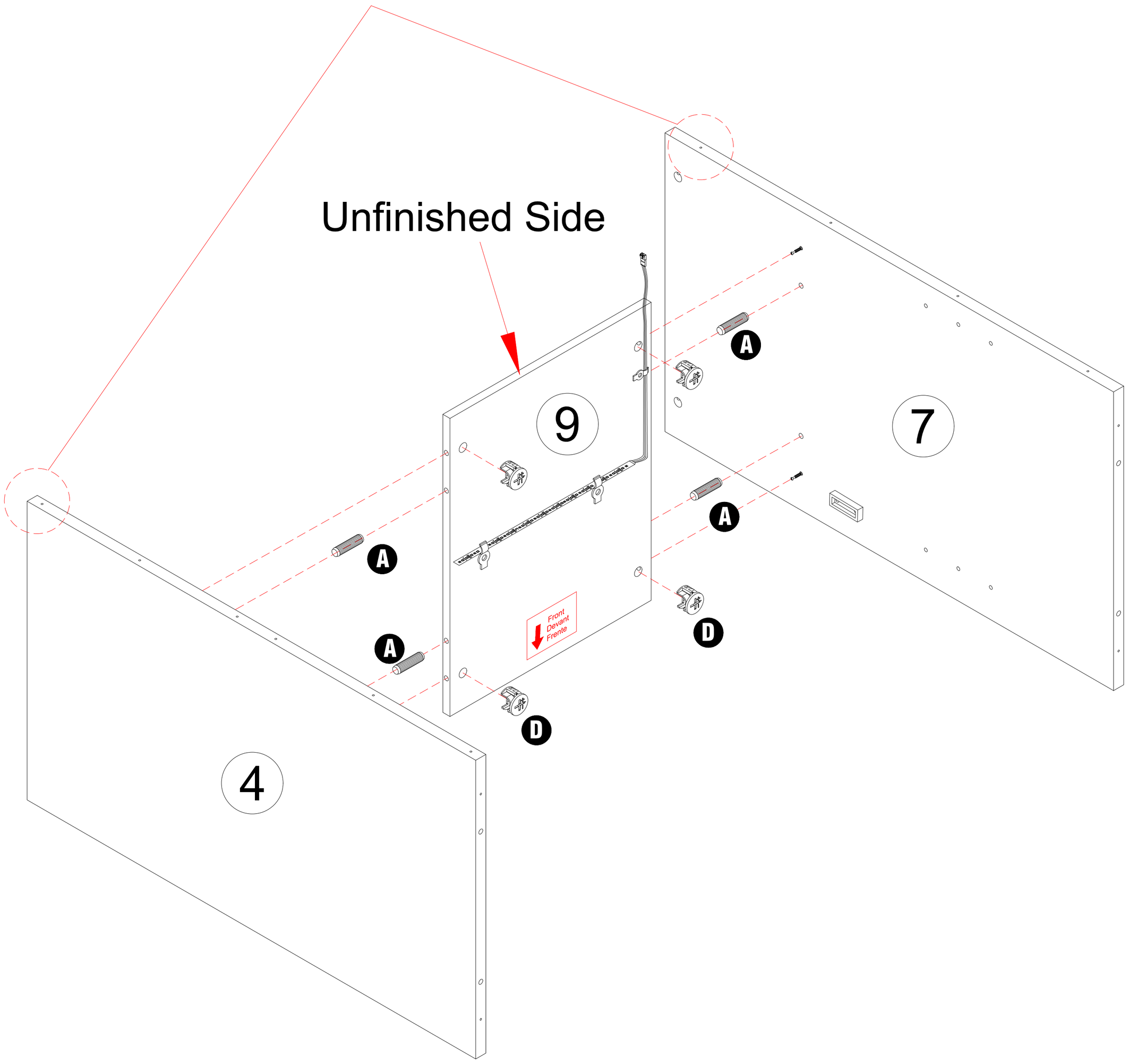

STEP 5

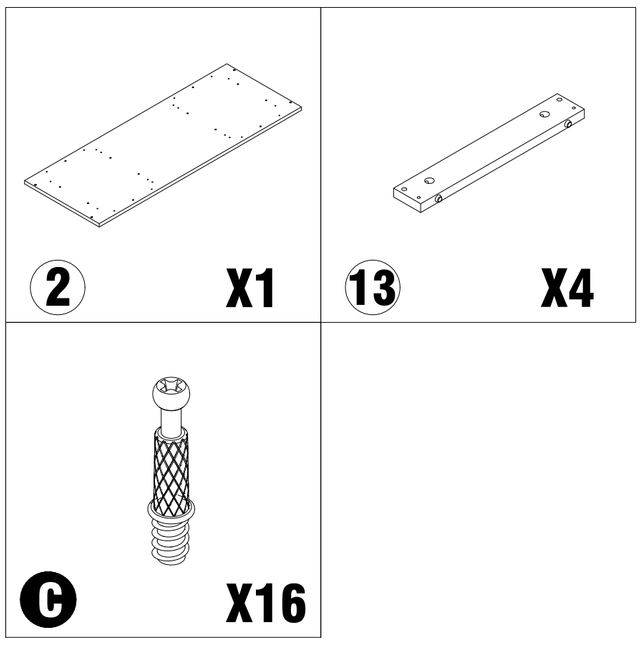

ACTION

- Orient panel 2 with its Front arrow toward the cabinet front, then thread C into the 16 pilot holes indicated by the dashed lines.
- Work in sections from left to right so no location is missed.

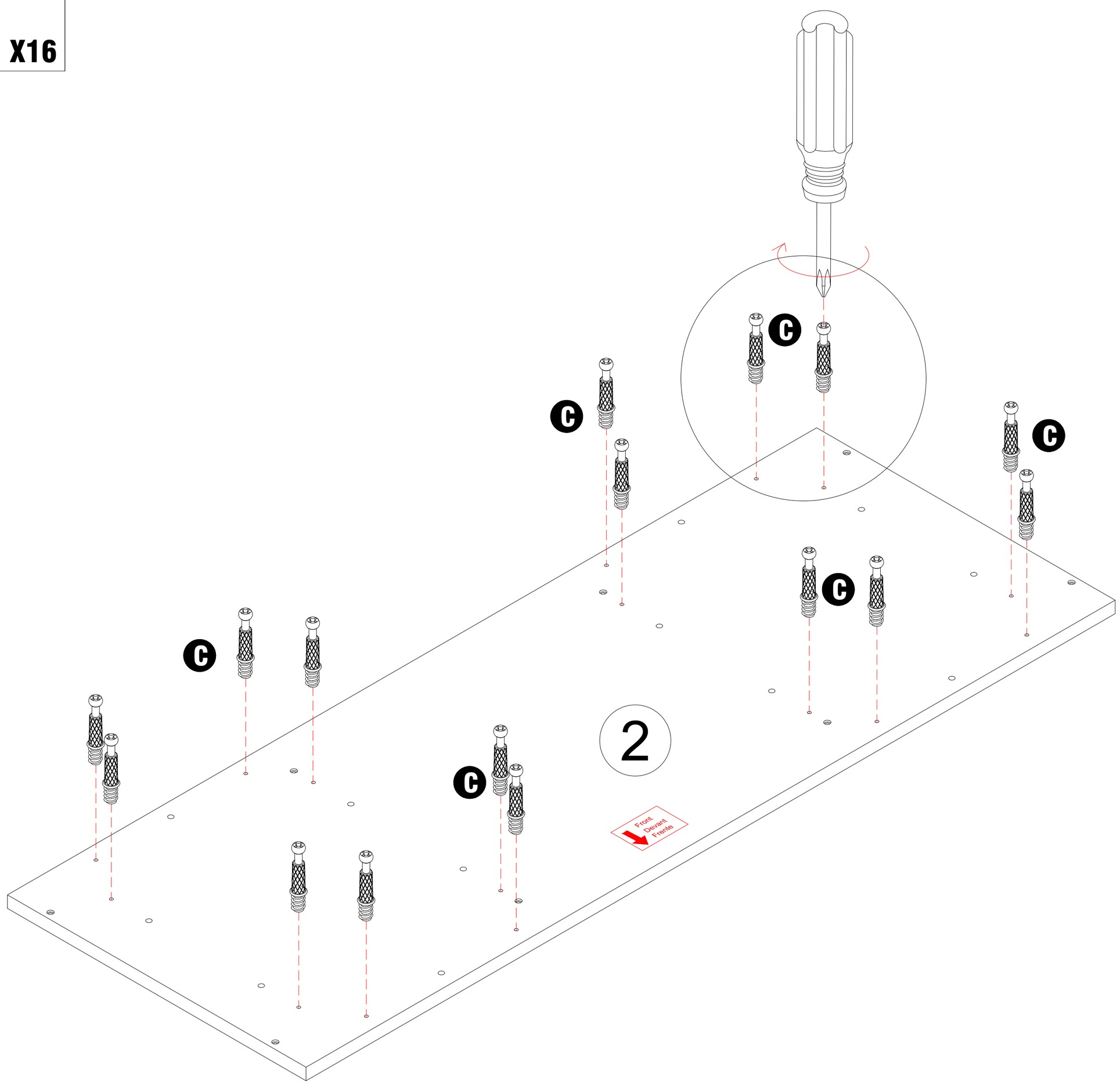

STEP 6

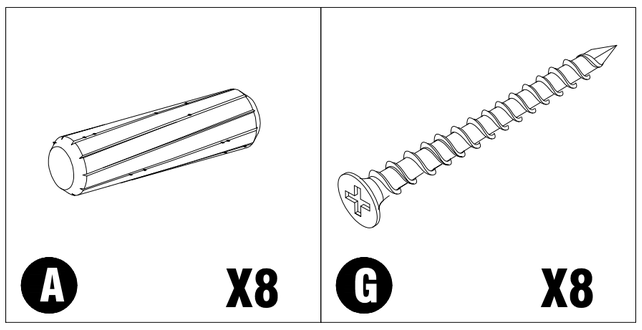

ACTION

- Keep both side assemblies facing the same Back Side direction, then insert eight dowels A into the indicated holes at the lower ends of the vertical panels.
- Seat every dowel at least halfway and keep it perpendicular to the panel.

BACK SIDE

Pilot holes must face upward and in the same direction.

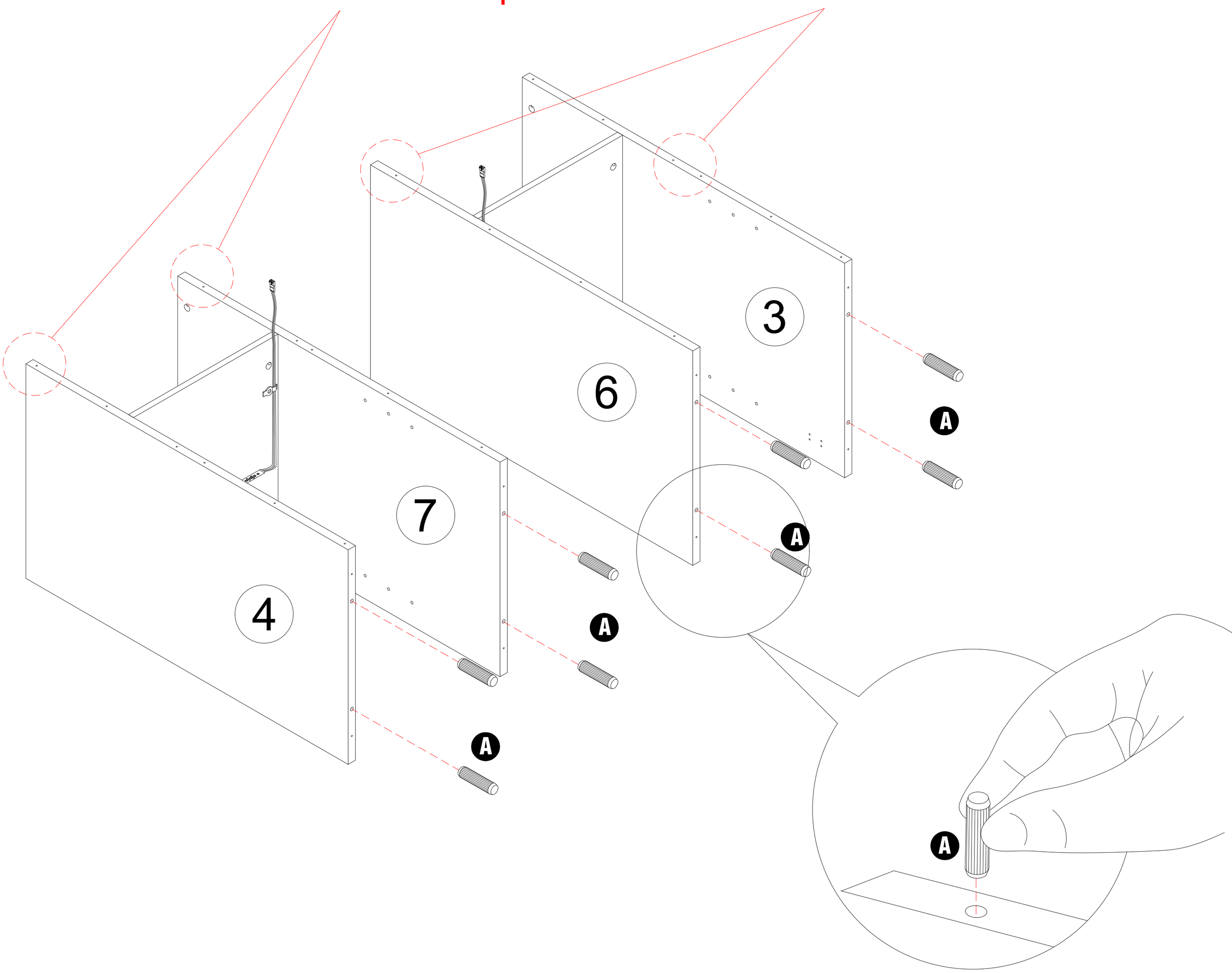

STEP 7

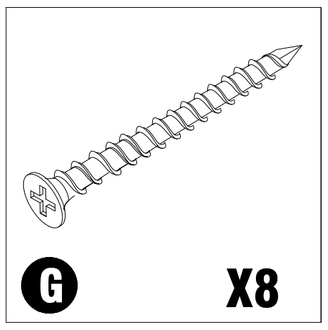

ACTION

- With one person supporting each side assembly, align all dowels with panel 2 while keeping the Front arrow toward the front.
- Start all eight screws G through panel 2. Tighten gradually in an alternating left-to-right pattern.

BACK SIDE

Pilot holes must face upward and in the same direction.

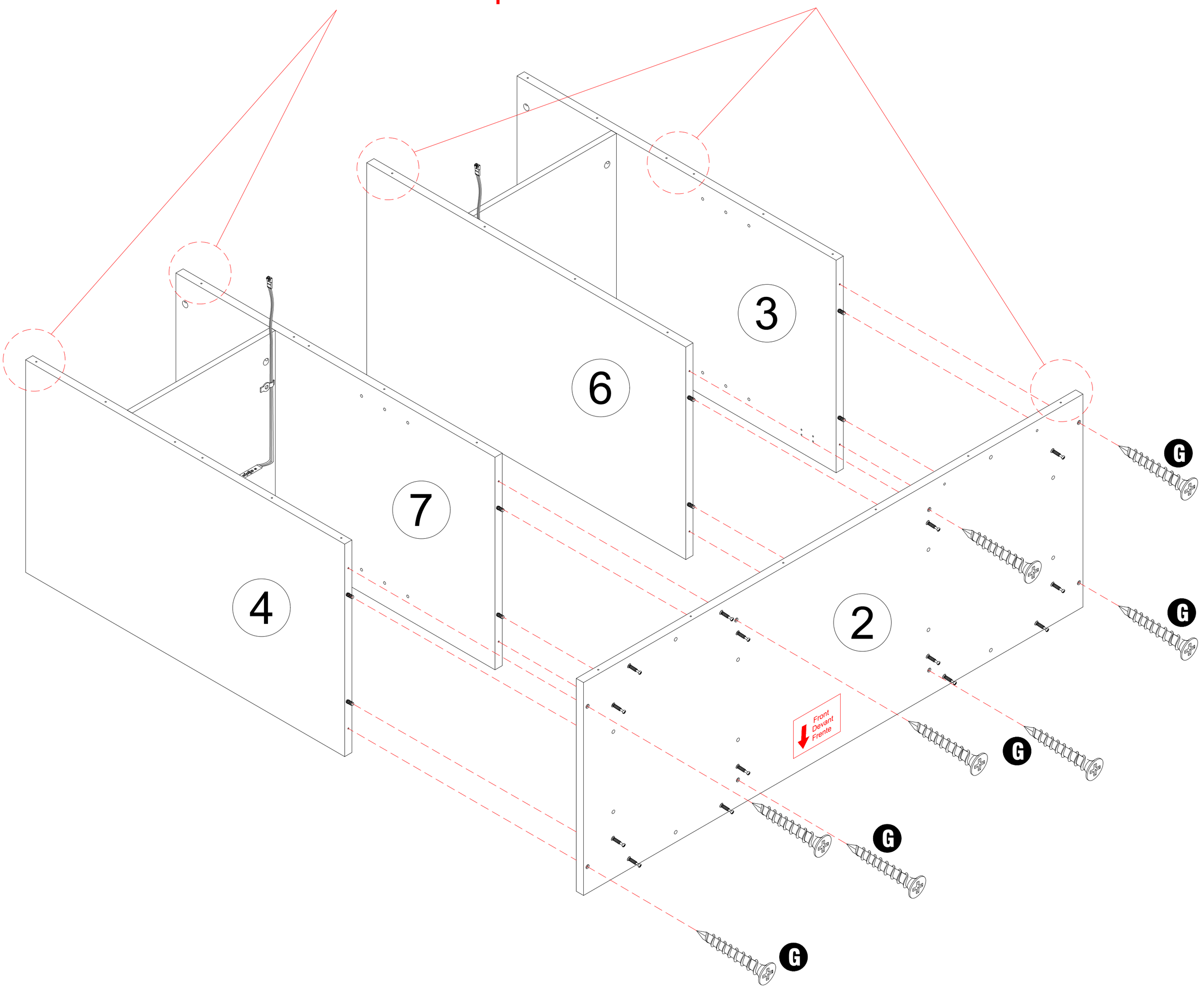

STEP 8

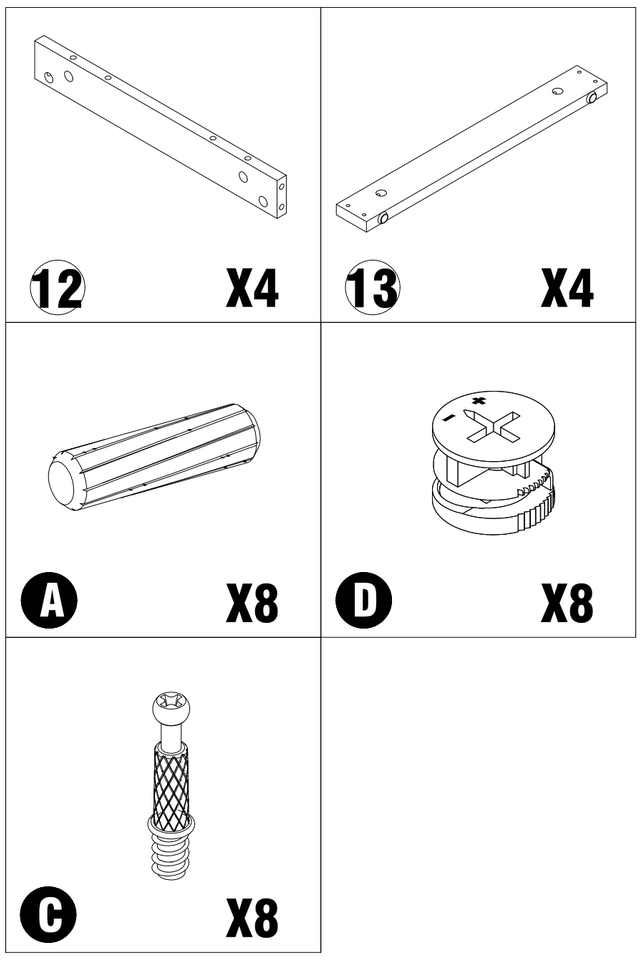

ACTION

- Thread two cam bolts C into each of the four parts 13, for a total of eight bolts.
- Use dowels A and cam locks D to join parts 12 and 13 into two identical rectangular frames.
- Aim every D toward its bolt. Square each frame before tightening all locks.

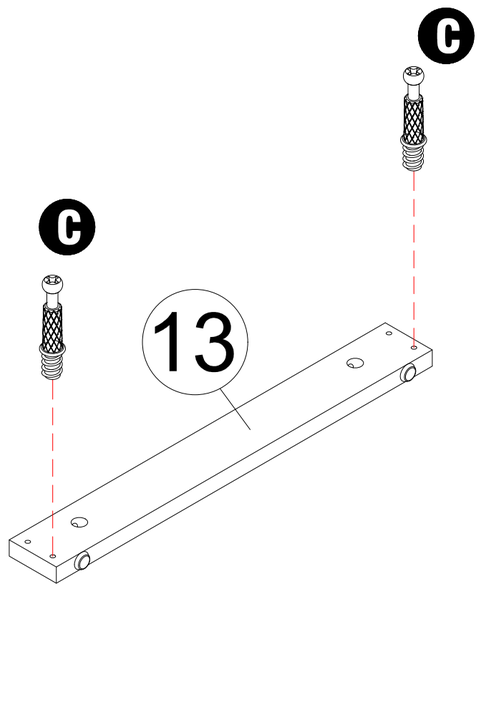

X 4

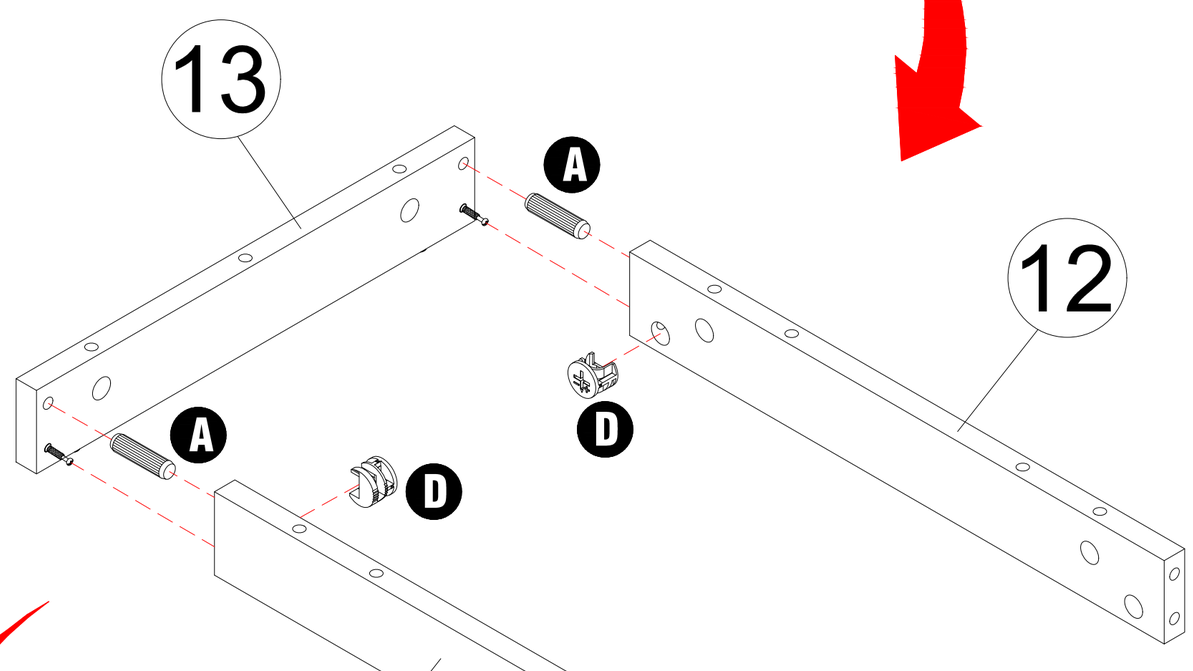

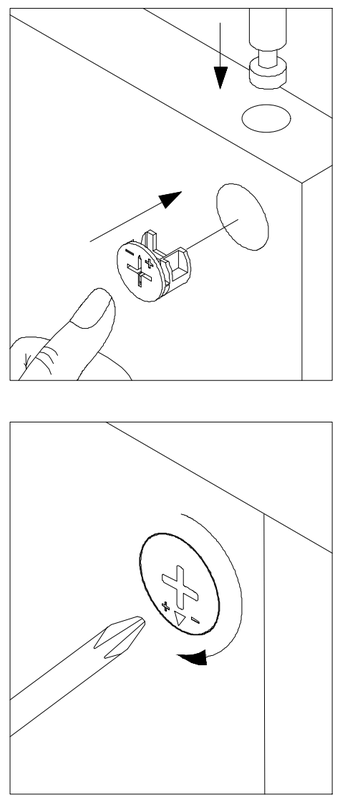

X 2

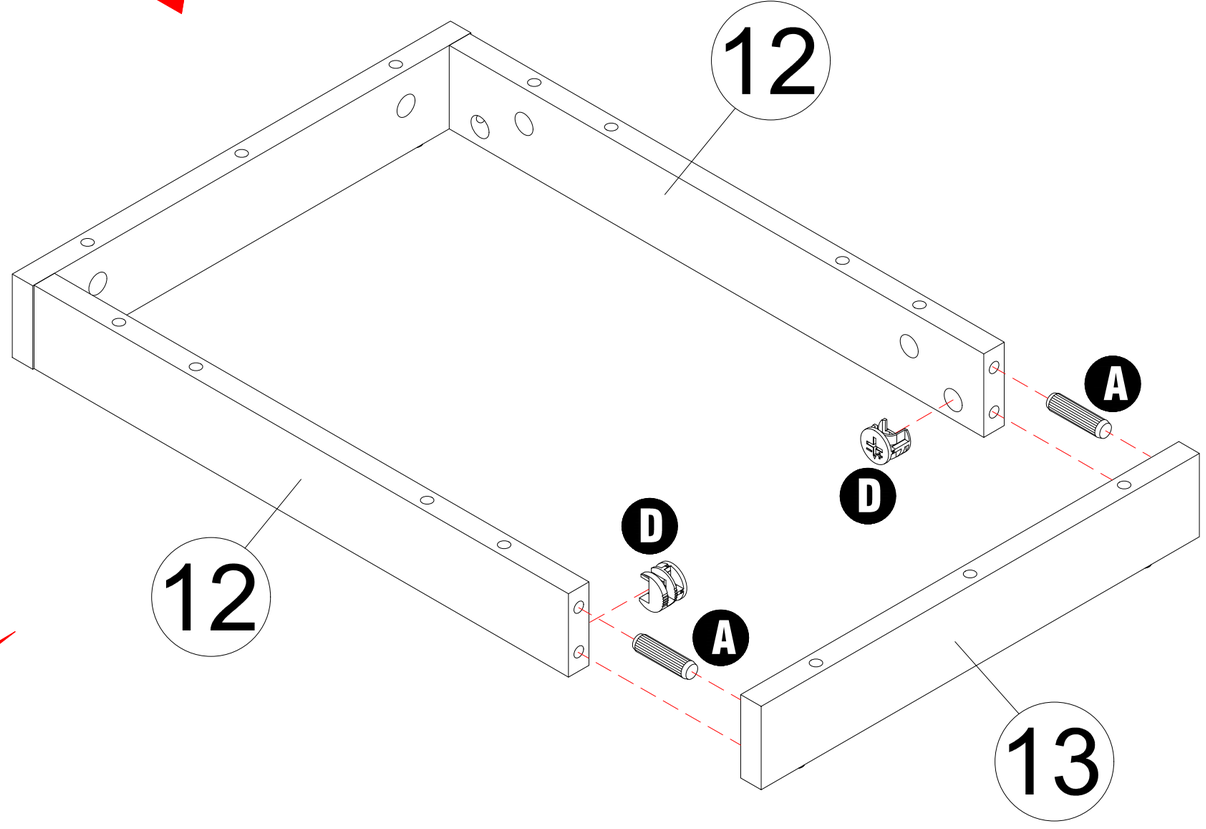

X 2

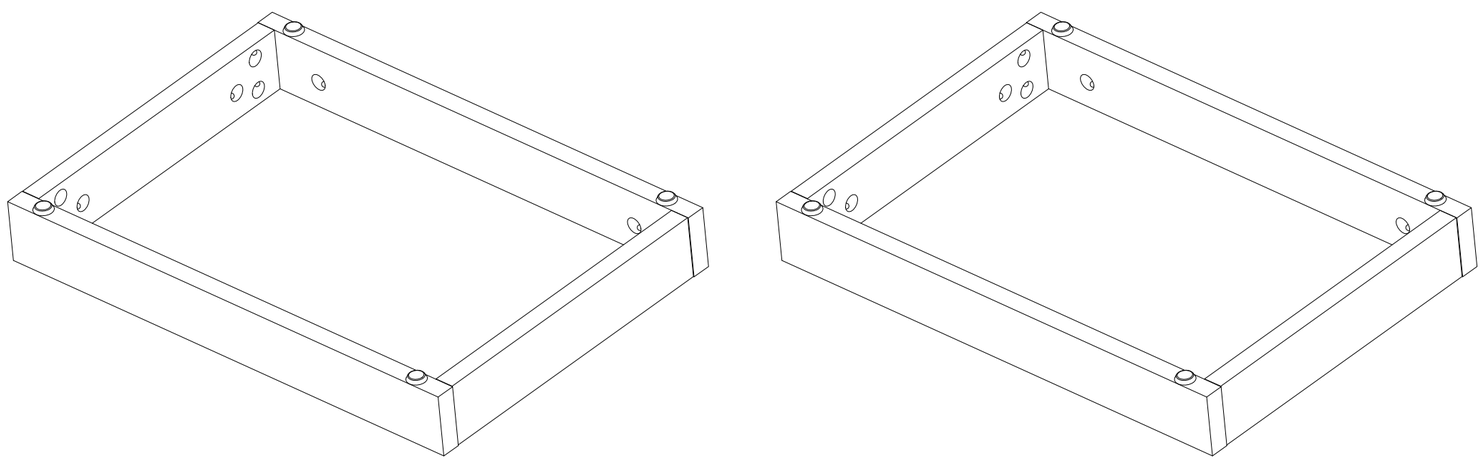

STEP 9

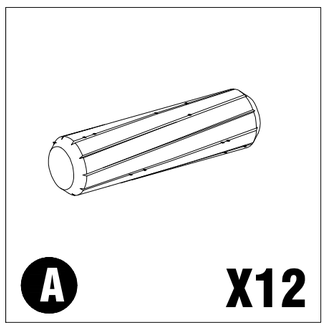

ACTION

- Insert 12 dowels A in the indicated holes under panel 2. With two adults, lift and align the two base frames with the dowels.
- Align the outside holes first, then lower the inside edges into place while keeping both frames parallel.

BACK SIDE

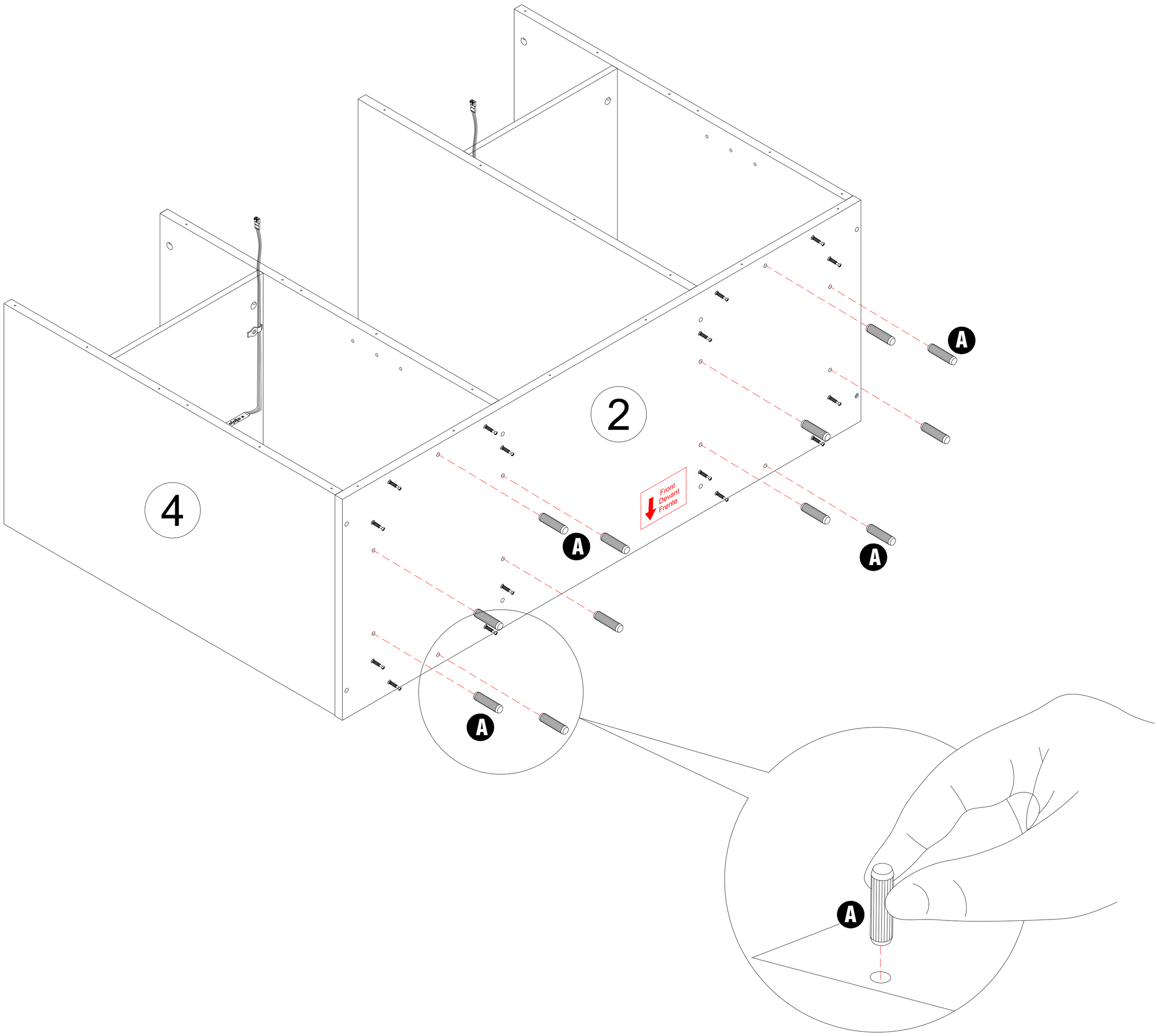

STEP 10

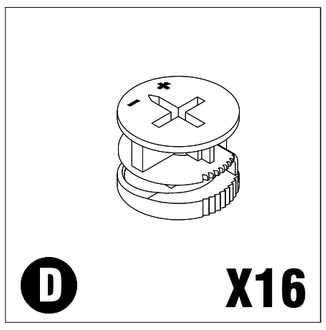

ACTION

- Insert the 16 cam locks D from inside the base frames with each arrow pointing toward its cam bolt in panel 2.
- Seat both frames fully against panel 2, then tighten the locks gradually in a diagonal pattern.

BACK SIDE

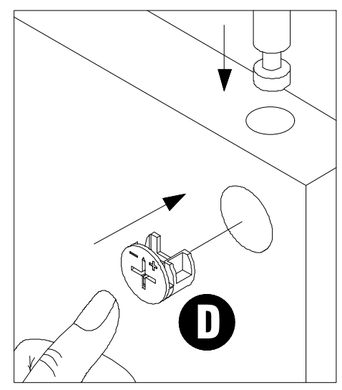

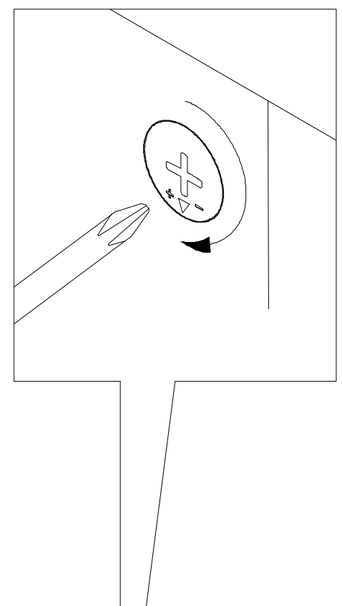

Pilot holes must face upward
and in the same direction.

STEP 11

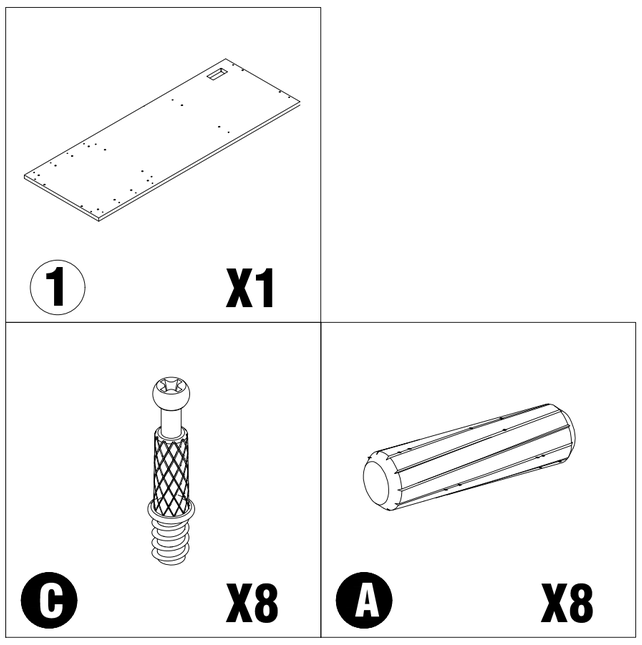

ACTION

- Use the Front arrow to identify the underside and orientation of panel 1. Install eight cam bolts C and eight dowels A in the indicated holes.
- Keep the rectangular power-module opening on the side shown, and keep all connectors perpendicular to the panel.

STEP 12

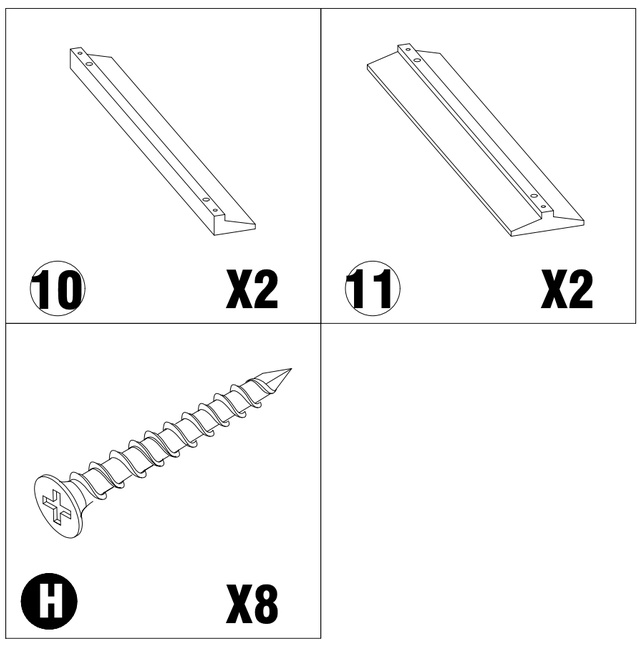

ACTION

- Arrange the two parts 10 and two parts 11 on the underside of top panel 1 exactly as shown. Keep all glass-entry openings facing the cabinet front.
- Start all eight screws H in their pilot holes, then tighten while keeping the four rails straight and parallel.

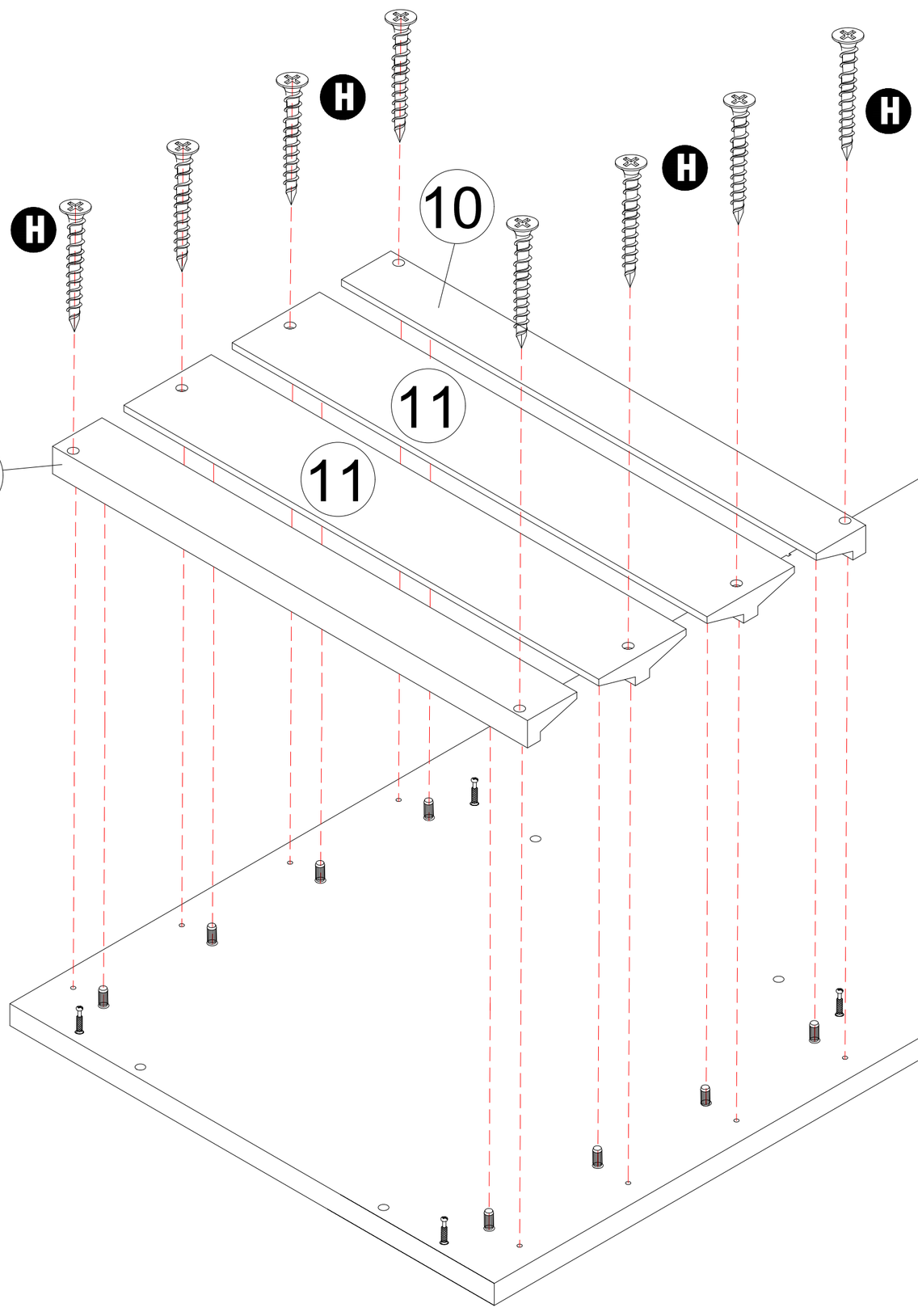

STEP 13

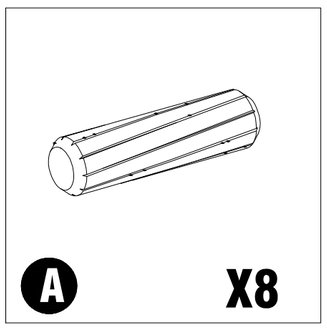

ACTION

- Insert eight dowels A into the indicated top-edge holes of panels 3, 4, 6, and 7. Seat them at least halfway.

BACK SIDE

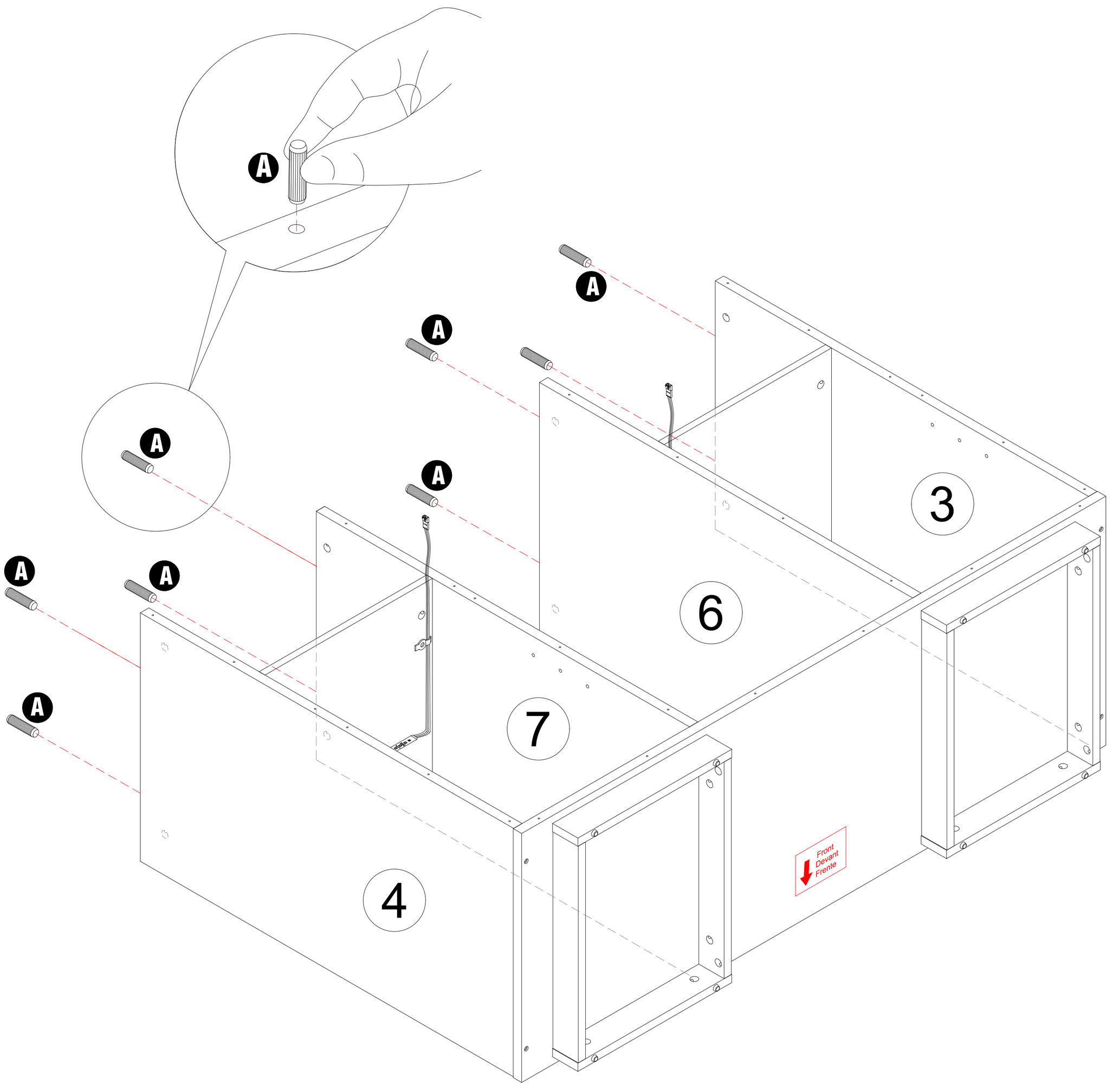

STEP 14

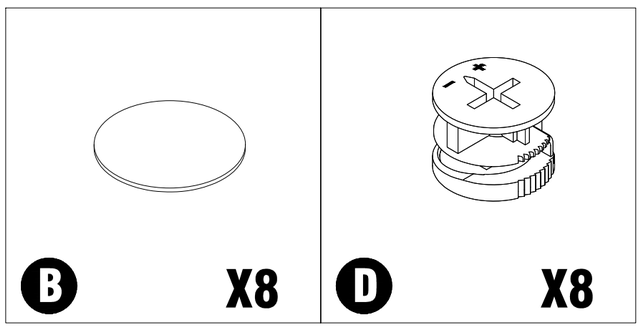

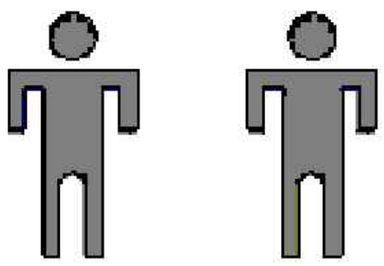

2 people for assembly

ACTION

- With one adult at each end, lift top panel 1, match the Front direction, align all dowels and cam bolts, and lower it straight down.
- Install and tighten eight cam locks D from inside the cabinet. Press in the eight caps B only after every joint is secure.

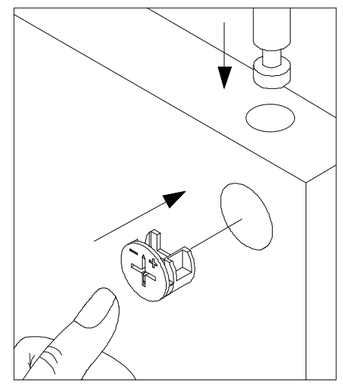

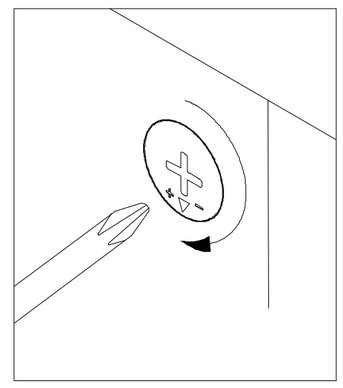

BACK SIDE

Pilot holes must face upward and in the same direction.

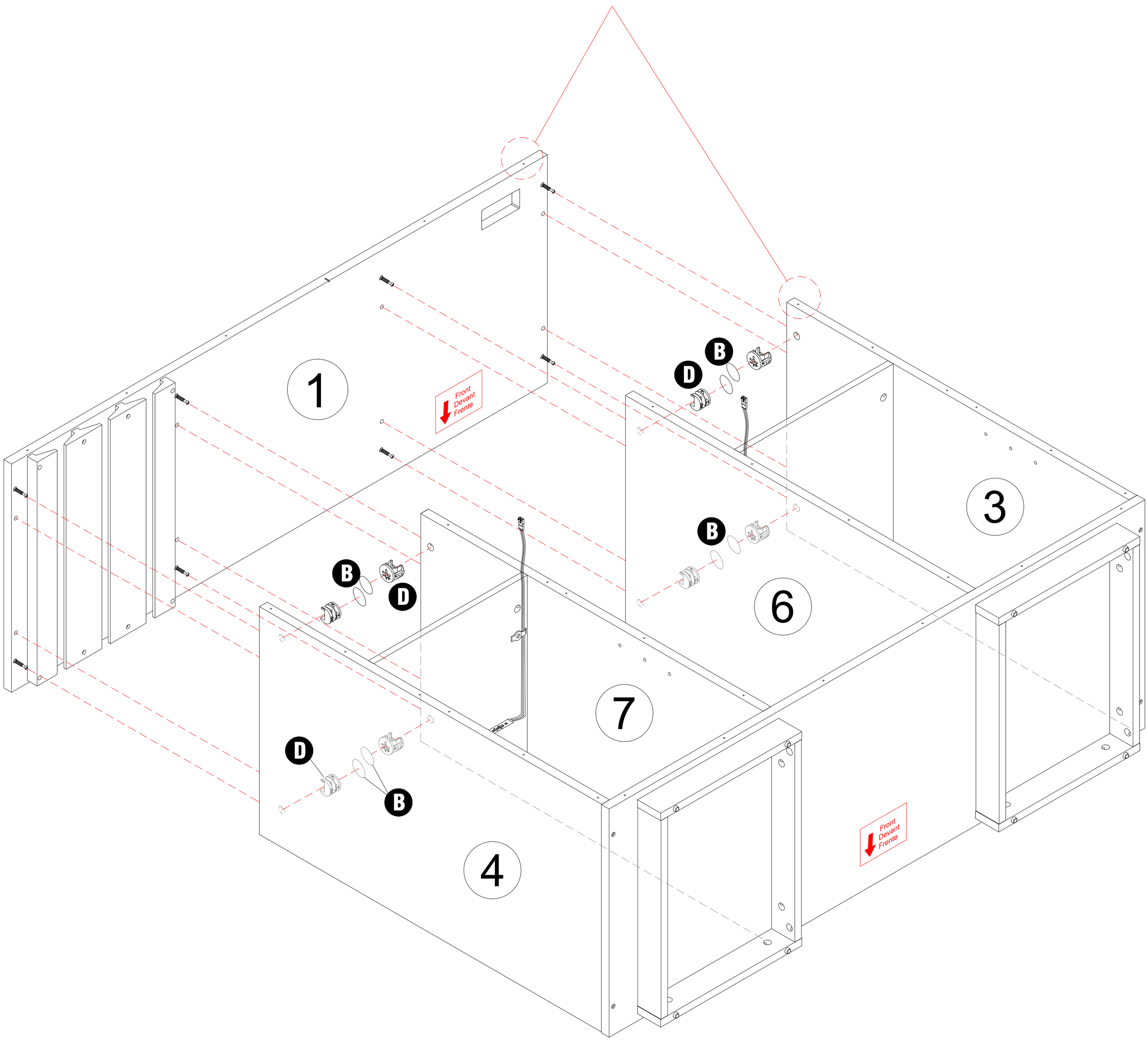

STEP 15

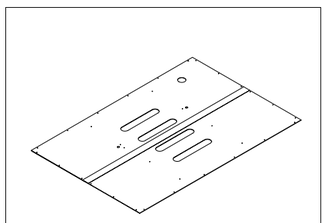

5 X1

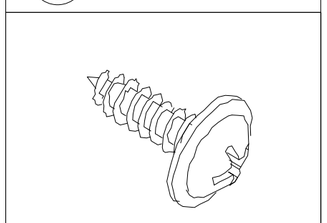

I X30

BACK SIDE

Do not insert screws into the two anti-tip restraint holes.The larger hole serves as the cable outlet for the charging station.

Ensure the cabinet is square (90 degrees) before attaching the back panel.

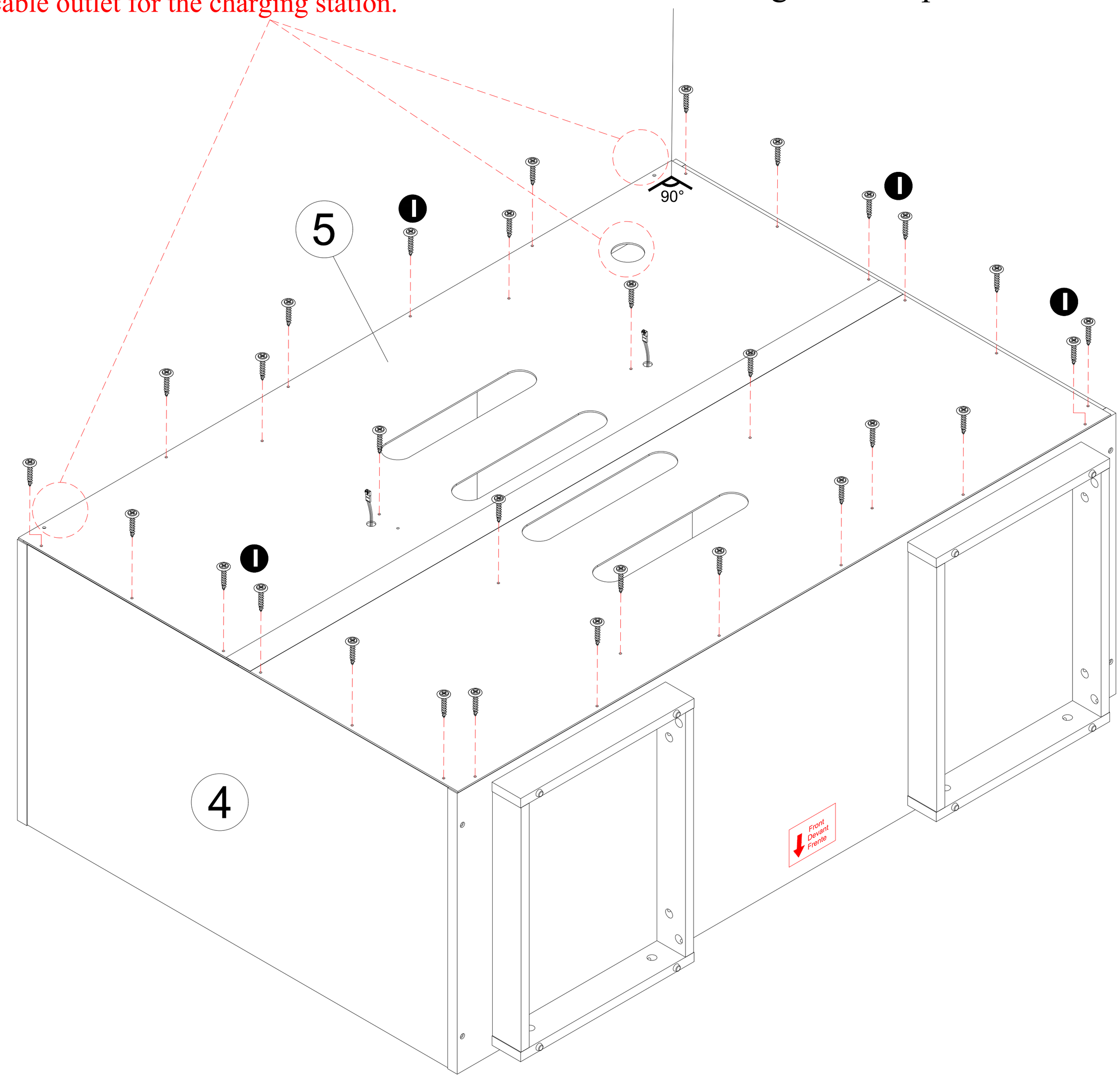

STEP 16

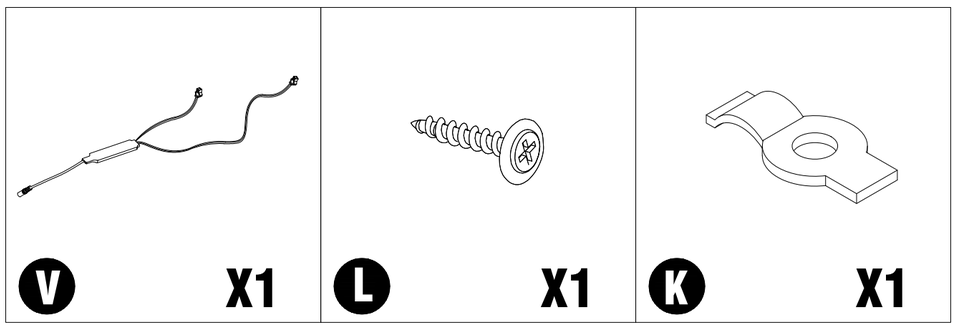

ACTION

- Keep power disconnected. Position controller cable V on back panel 5 as shown.
- Place clip K over a straight, insulated section of cable and secure it with screw L. Leave all connectors accessible.

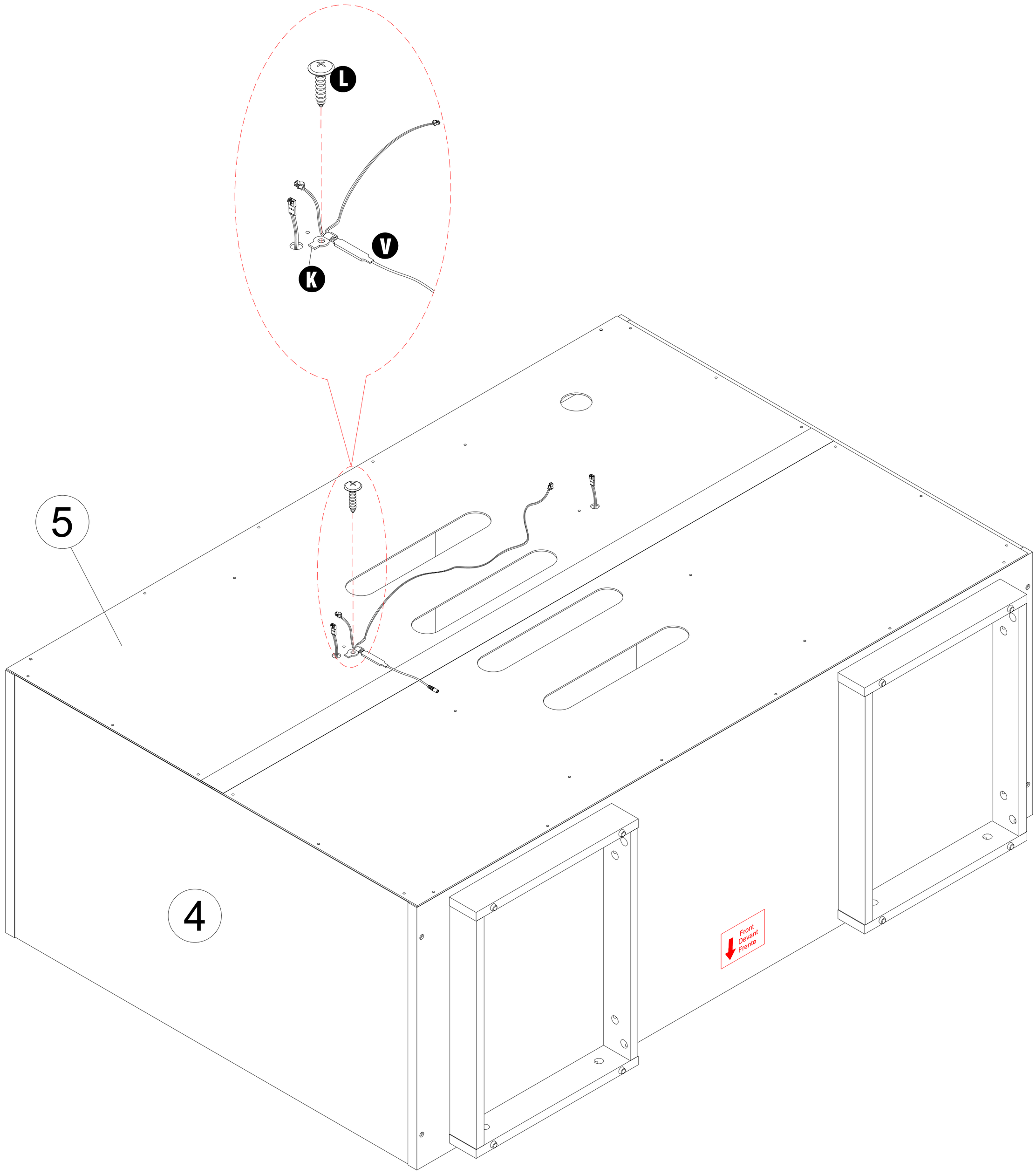

STEP 17

ACTION

- With power disconnected, align the two outputs from cable V with the two LED-strip connectors J and press each connection fully together.
- Match any keyed notch or arrow. Hold the plastic housings rather than pulling on the wires.

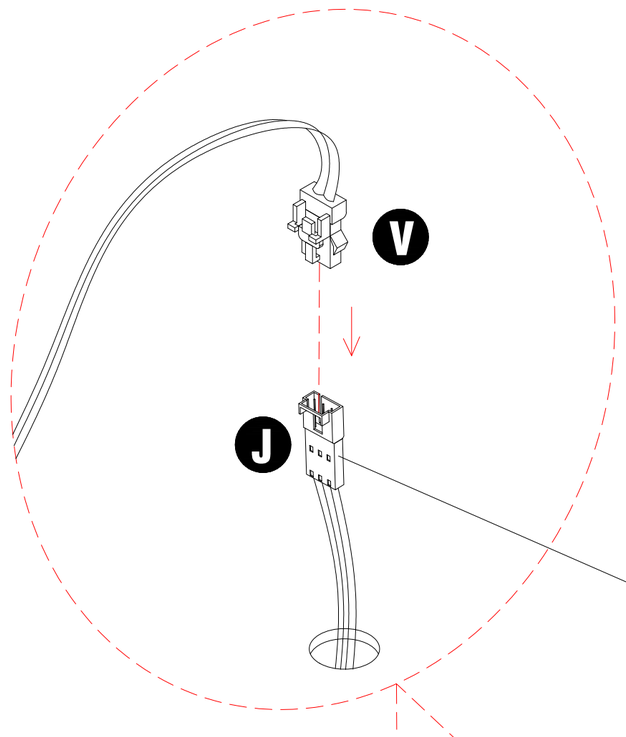

BACK SIDE

Connector

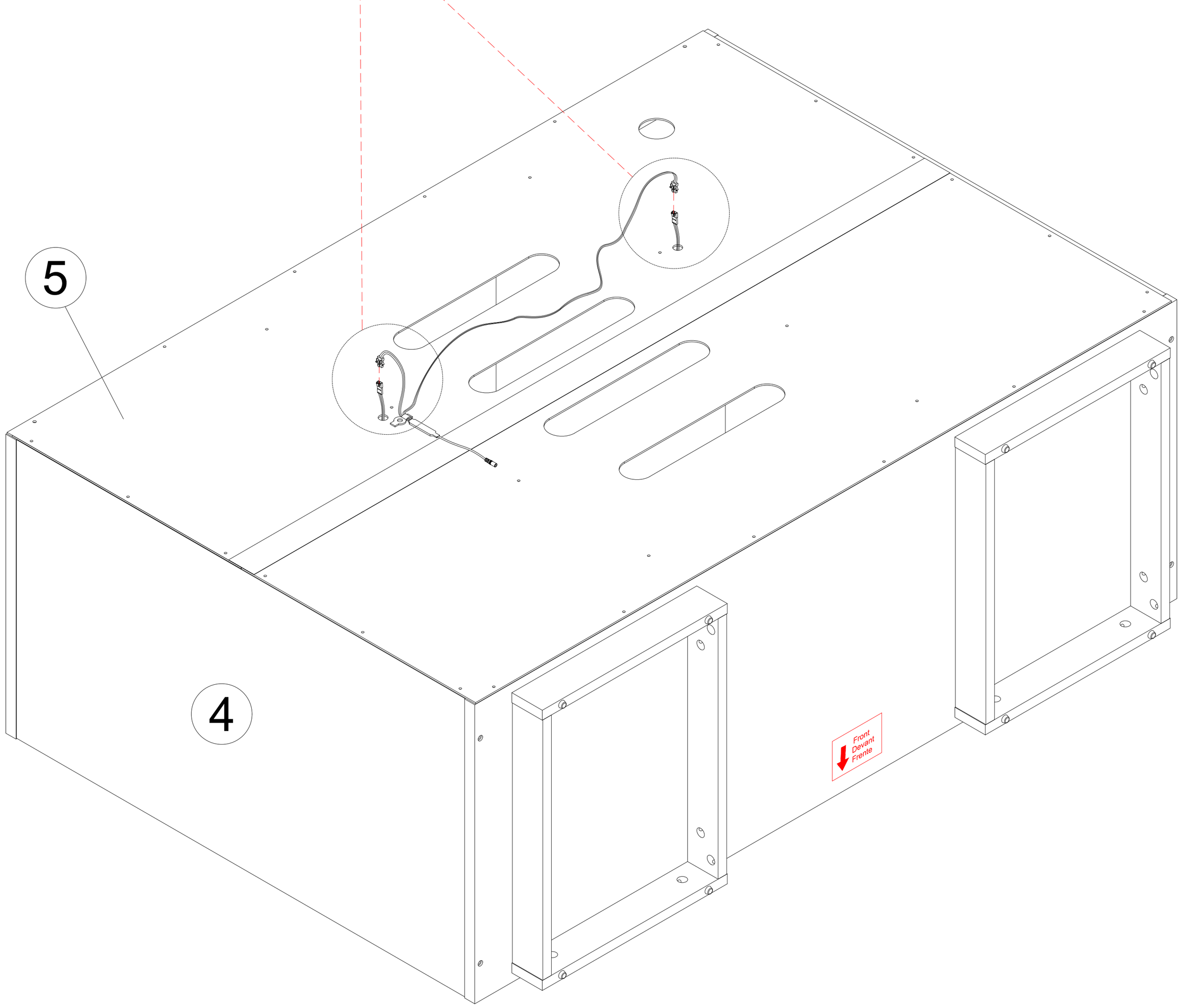

STEP 18

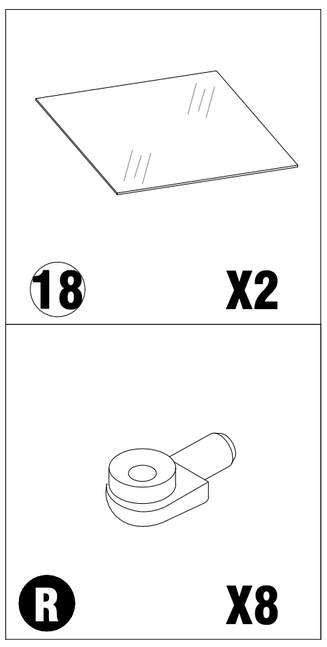

ACTION

- Install four supports R in each side compartment. Use matching hole heights so all four support surfaces are level and point inward.
- Hold each glass shelf 18 with two hands, insert it through the door opening, and lower it gently onto all four supports.

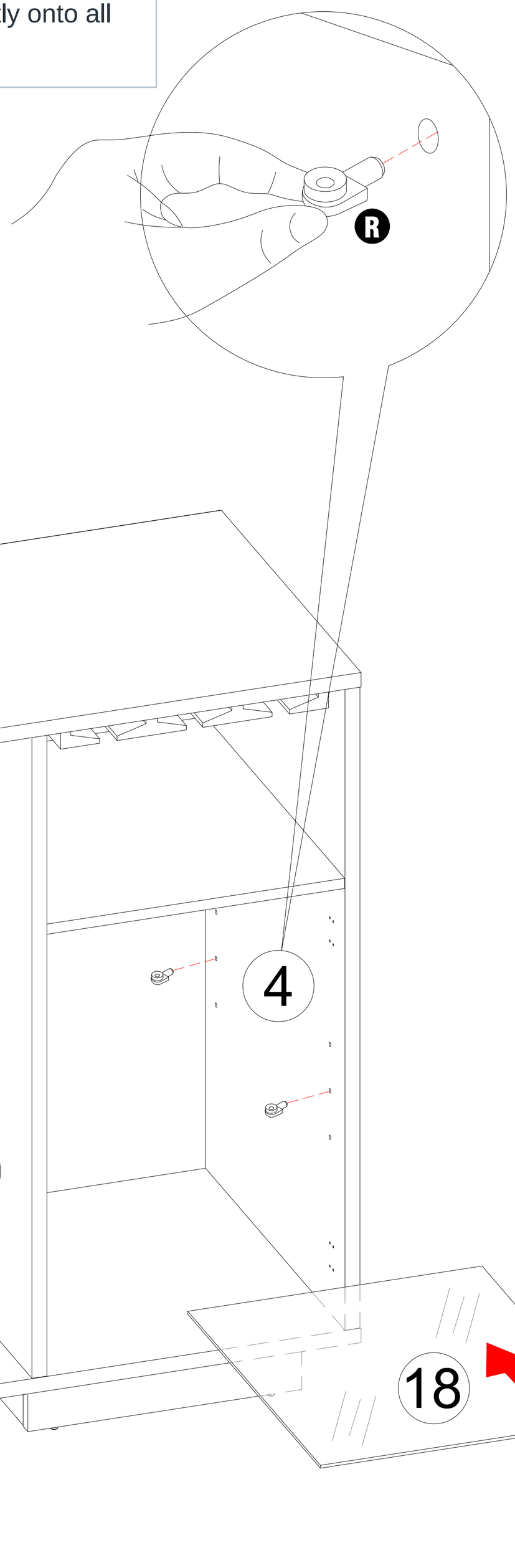

STEP 19

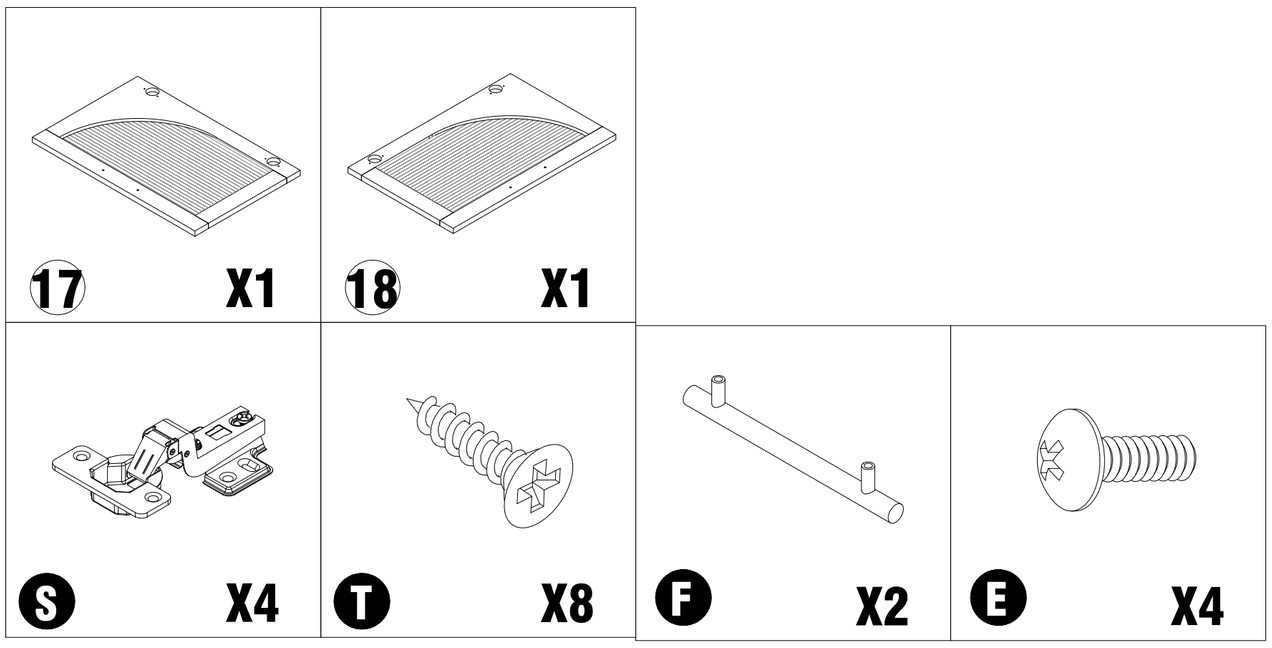

ACTION

- Place each door face down on a padded surface. Seat hinge S in each large cup hole and fasten each hinge with two screws T.
- Place handle F on the door front and secure it from the back with screws E.
- Keep the two doors as mirror images, with both handles on the inner edges when installed.

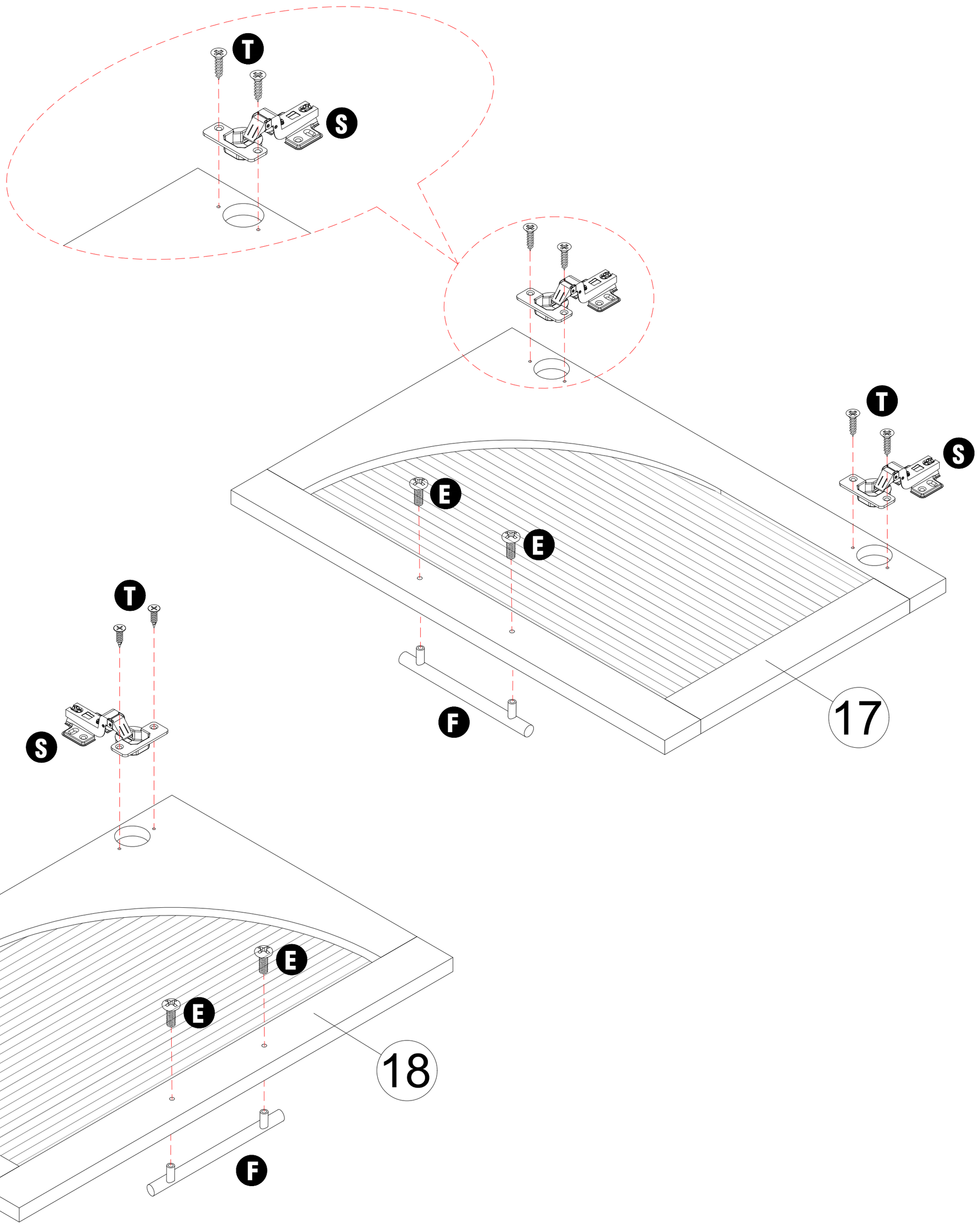

STEP 20

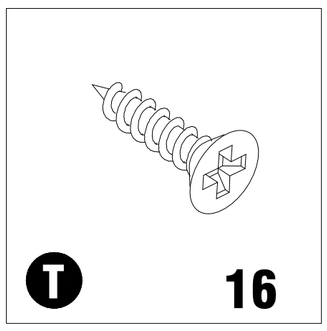

HOW TO ADJUST THE CONCEALED DOOR HINGES

Shipping can cause minor door misalignment. Use the screws shown to make small adjustments:

1. Move the door forward or backward.

2. Move the door left or right.

3. Move the door up or down.

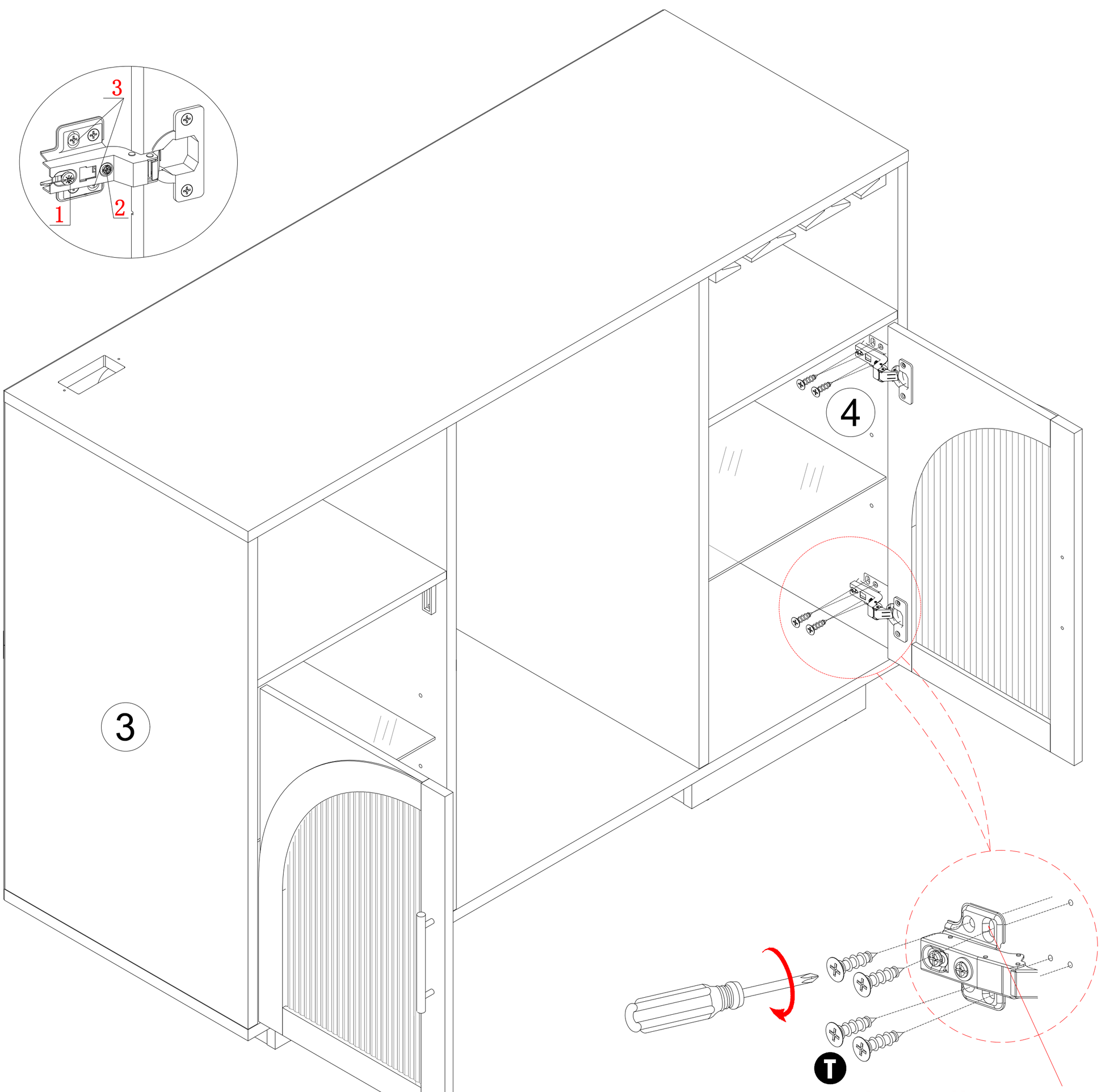

STEP 21

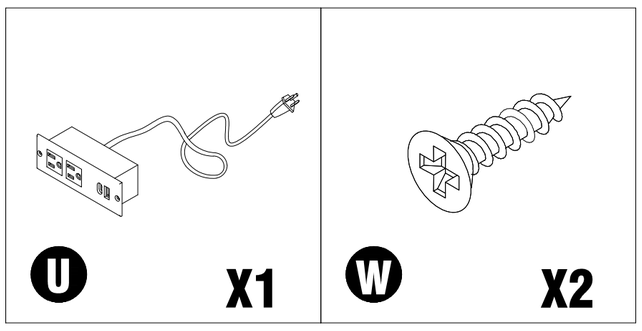

ACTION

- Keep the unit unplugged. Feed the power-module cord and plug through the rectangular opening in top panel 1 toward the back.
- Lower module U into the opening, seat its flange flat, and fasten it in the pilot holes with two screws W.

Route the plug through the cable opening.

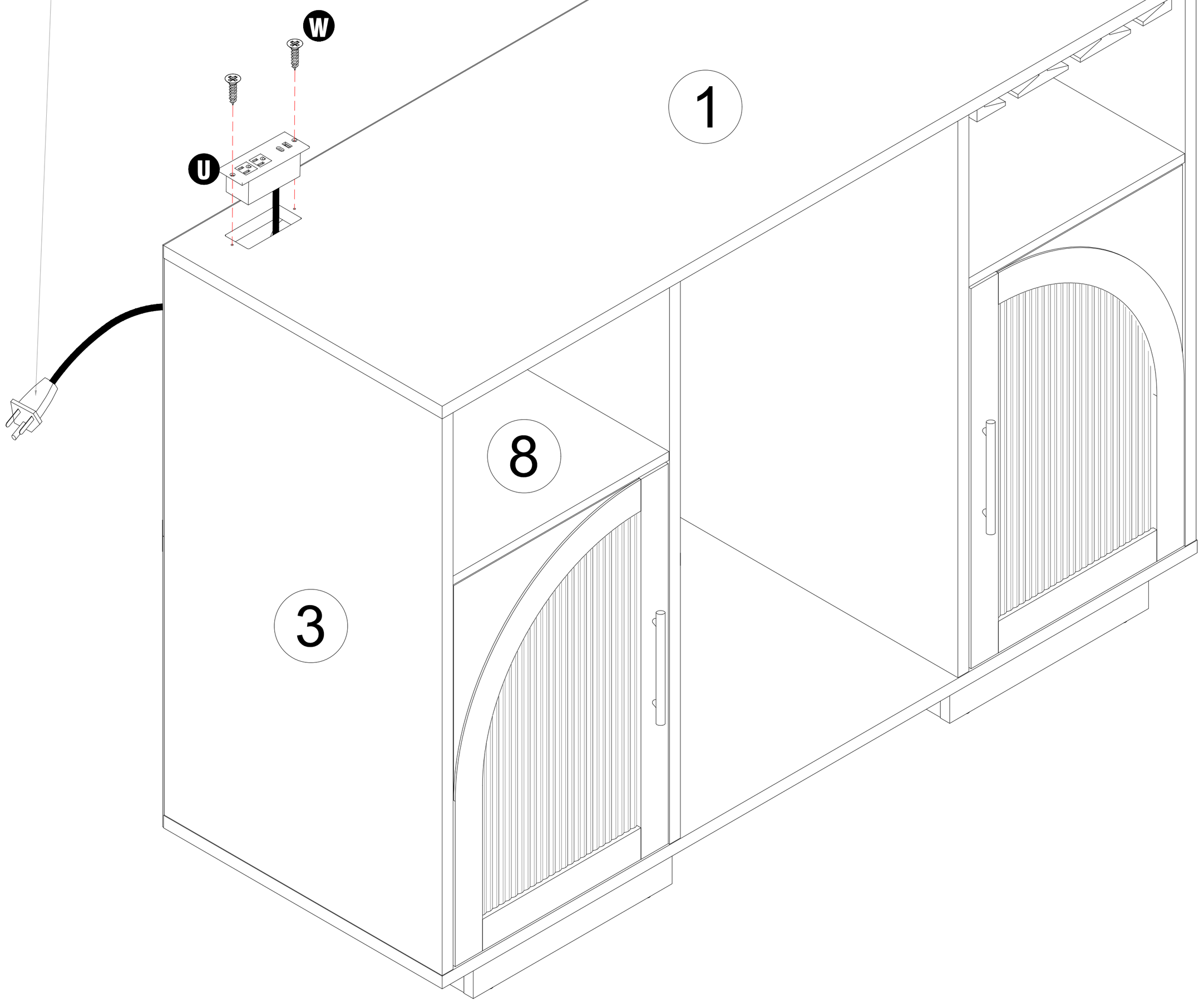

STEP 22

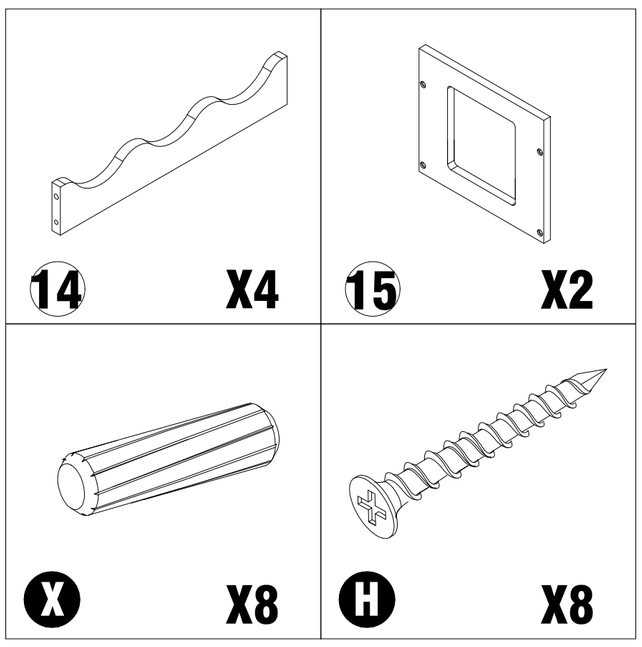

ACTION

- Arrange all four contoured rails 14 in the same direction with the bottle cradles facing upward.
- Use eight dowels X to align the two end frames 15, then fasten from the outside with eight screws H.
- Start all screws first and tighten in a diagonal sequence.

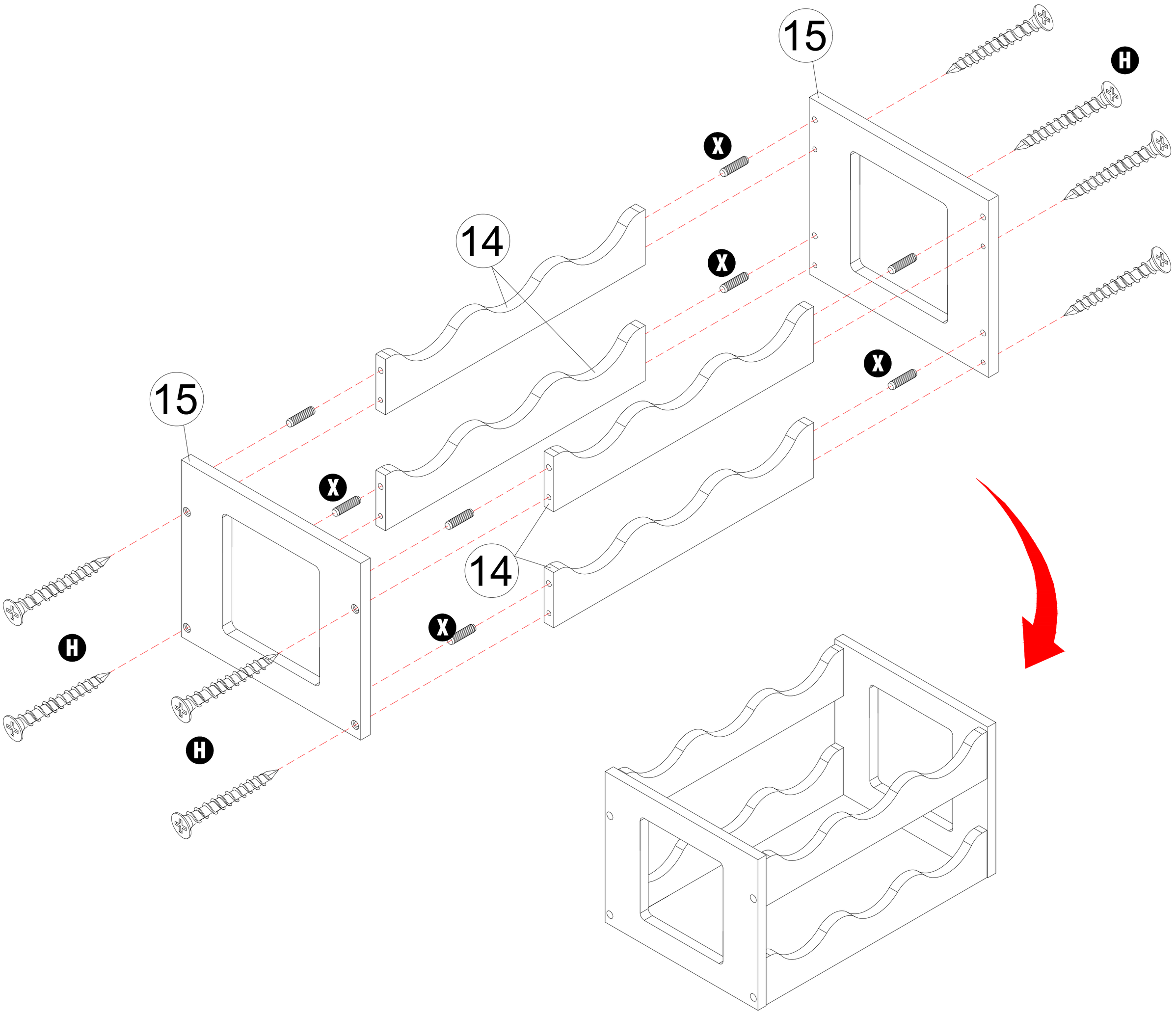

STEP 23

ACTION

- Open the left door and hold the completed rack level. Slide it into the compartment above panel 8 in the direction of the red arrows.

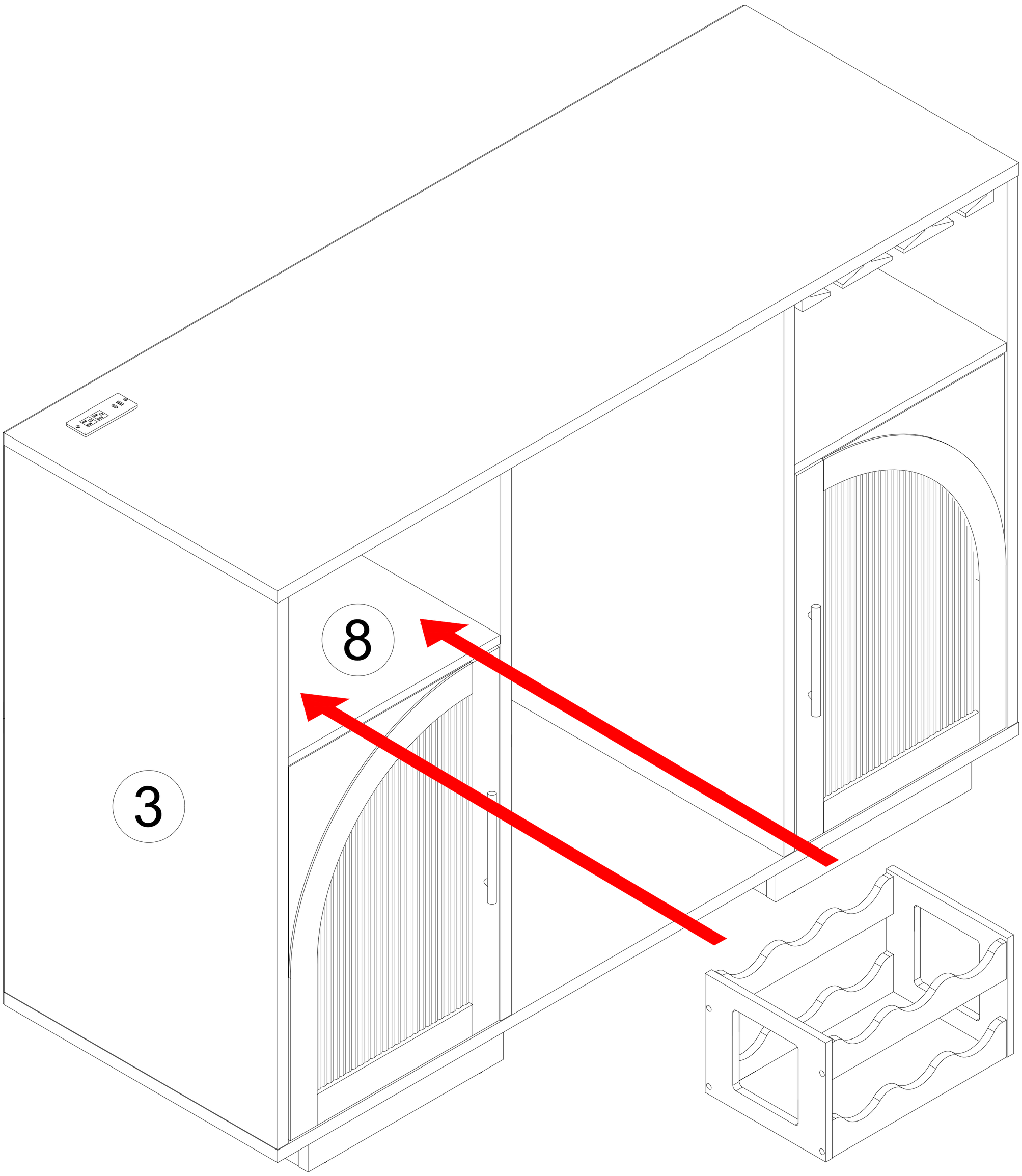

STEP 24

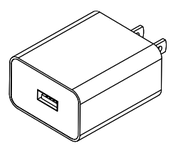		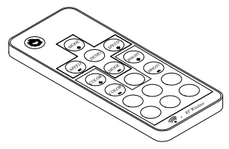
M X1	N X1	Remote Control O X1

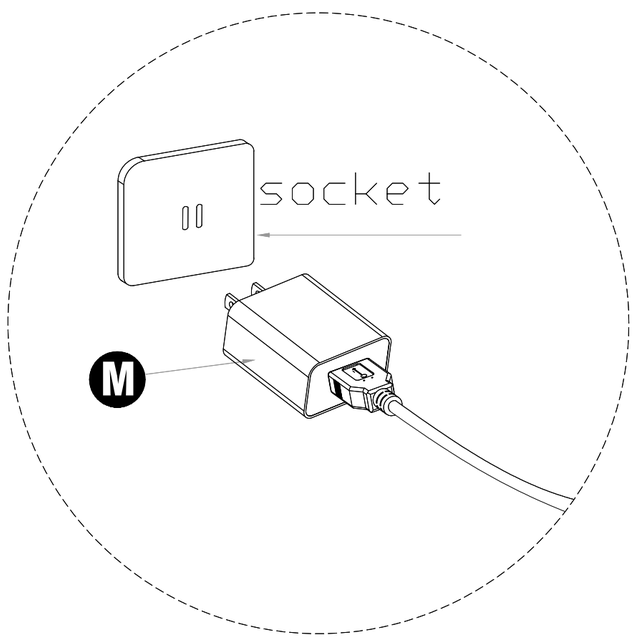

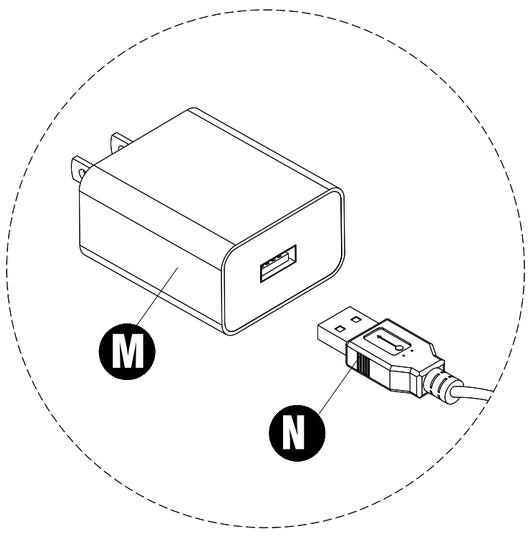

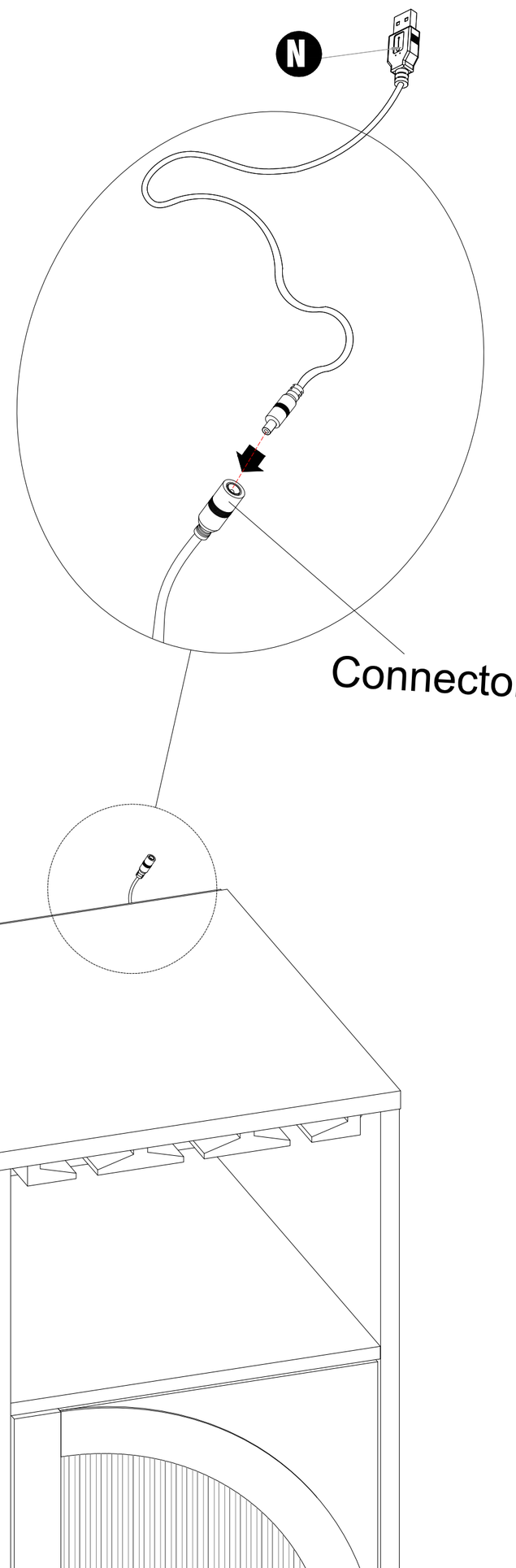

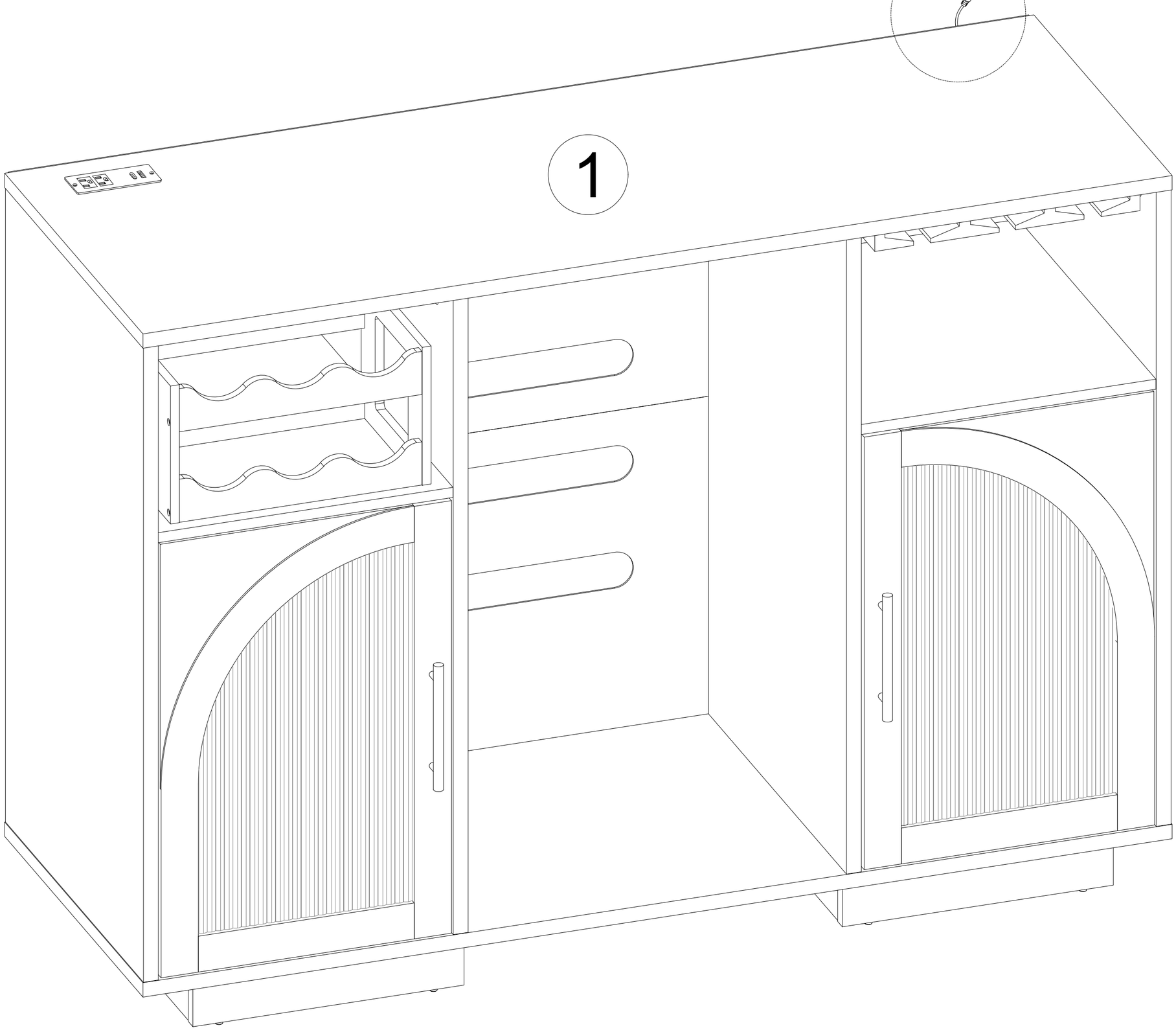

STEP 25

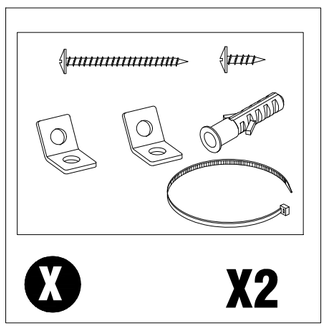

ACTION

- Move the cabinet to its final location and level it. Use a stud finder to locate solid wood wall studs.
- Fasten both wall brackets into studs and secure the cabinet brackets at the two reserved locations on top panel 1.
- Before drilling, verify that no electrical wiring, plumbing, or gas line is behind either location.

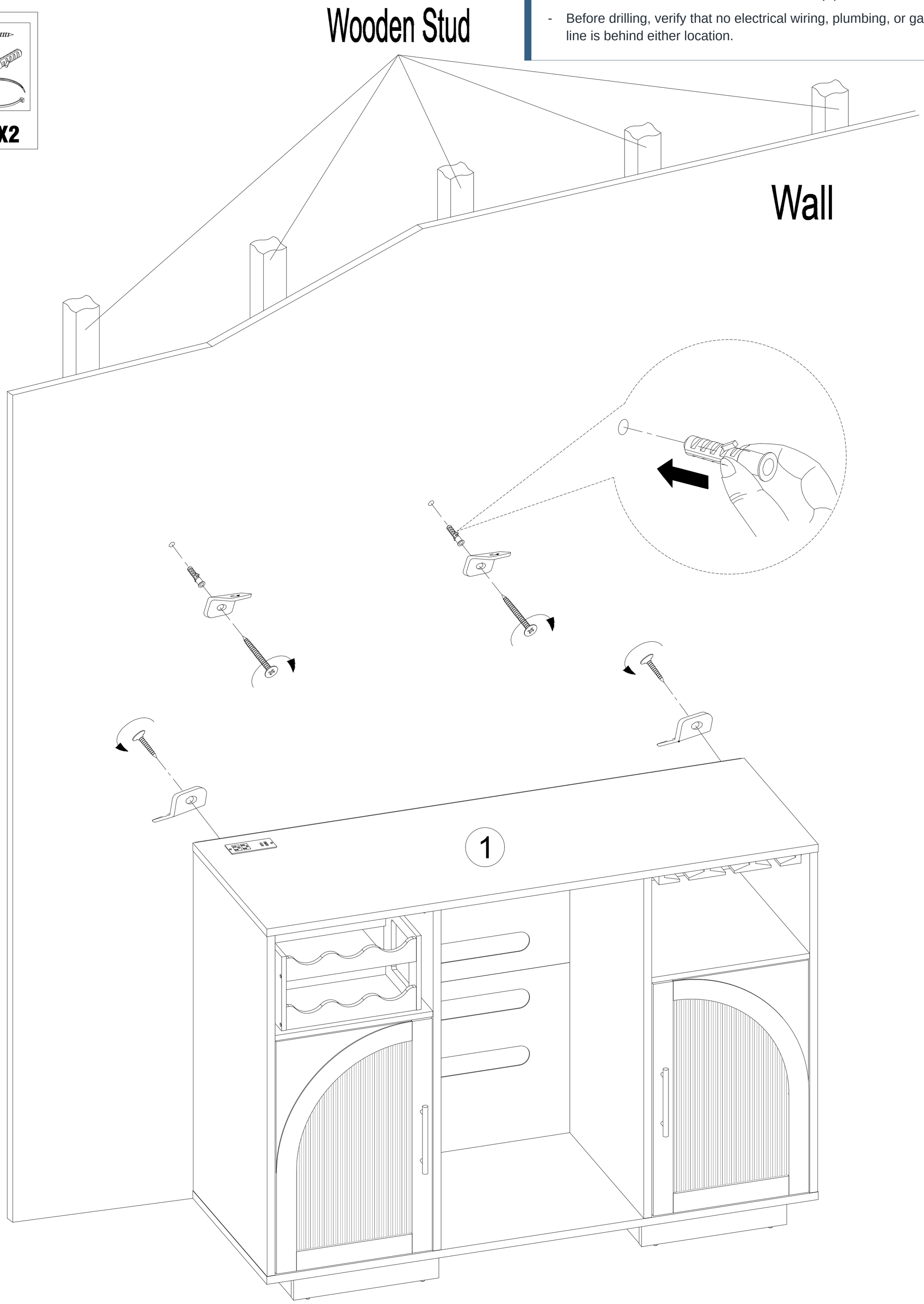

STEP 26

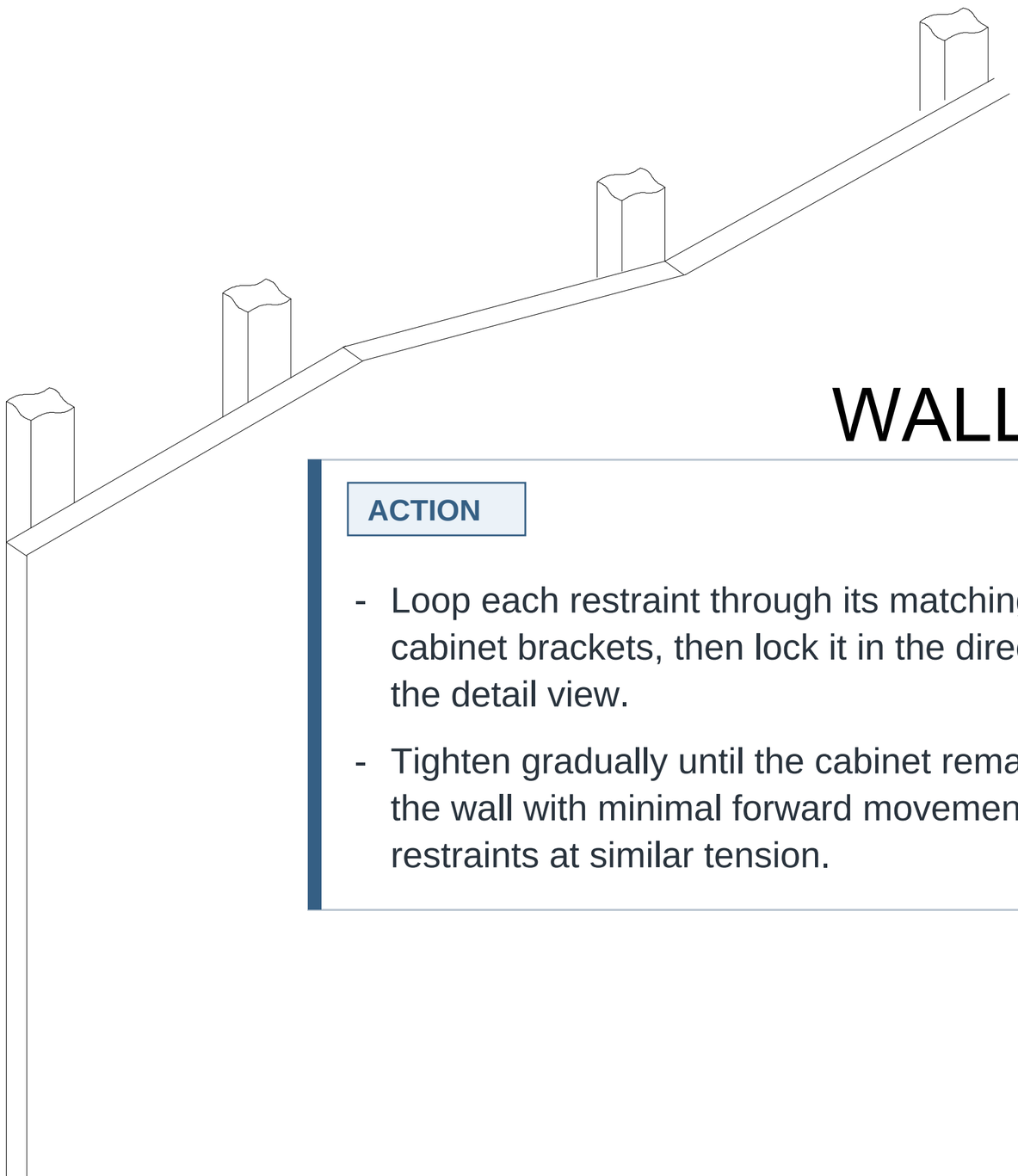

WALL

ACTION

- Loop each restraint through its matching wall and cabinet brackets, then lock it in the direction shown in the detail view.
- Tighten gradually until the cabinet remains close to the wall with minimal forward movement. Keep both restraints at similar tension.

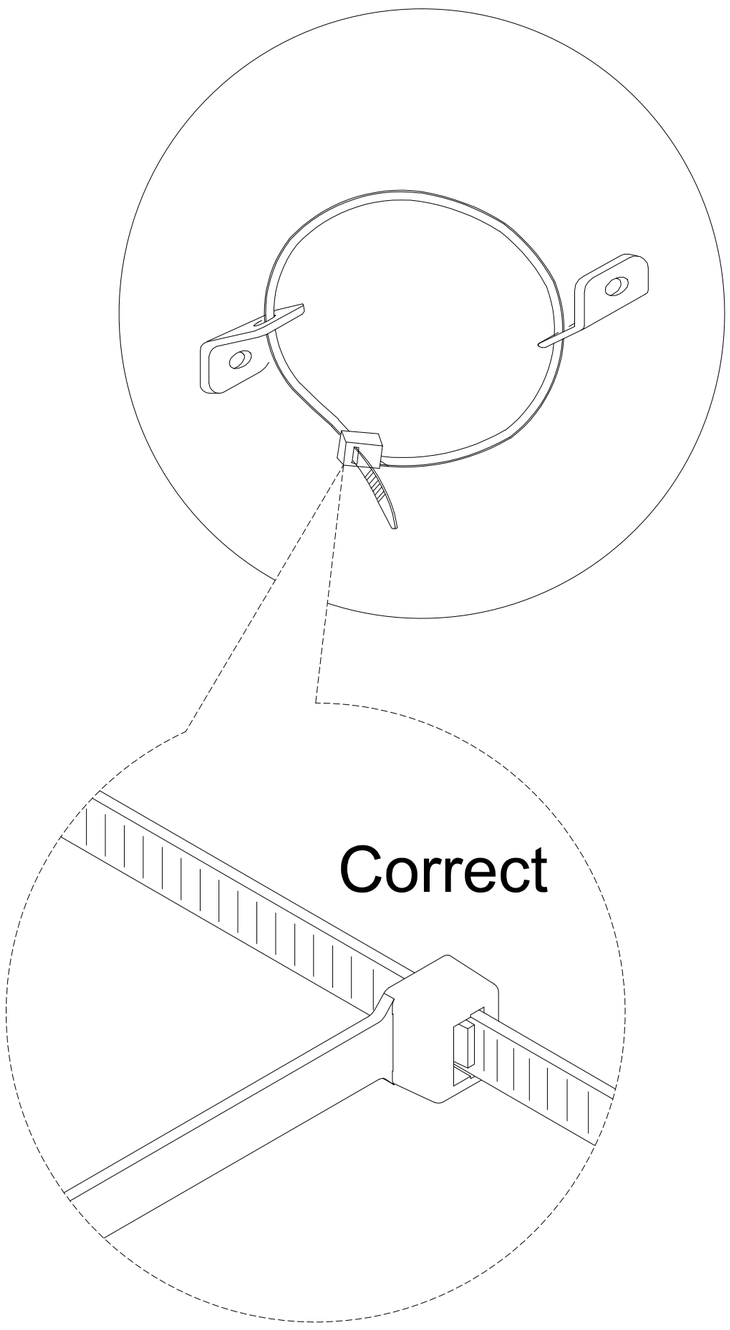

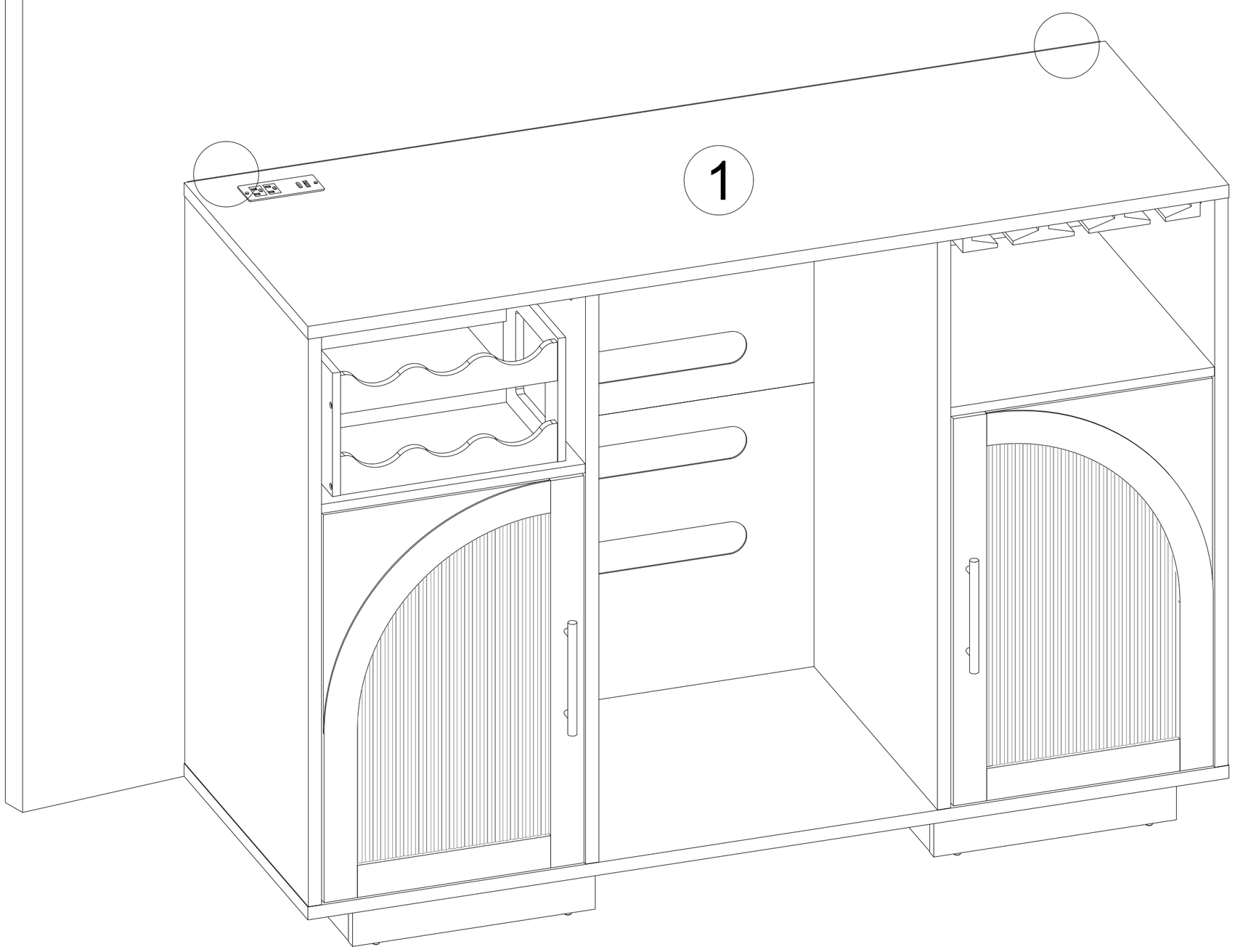

STEP 27

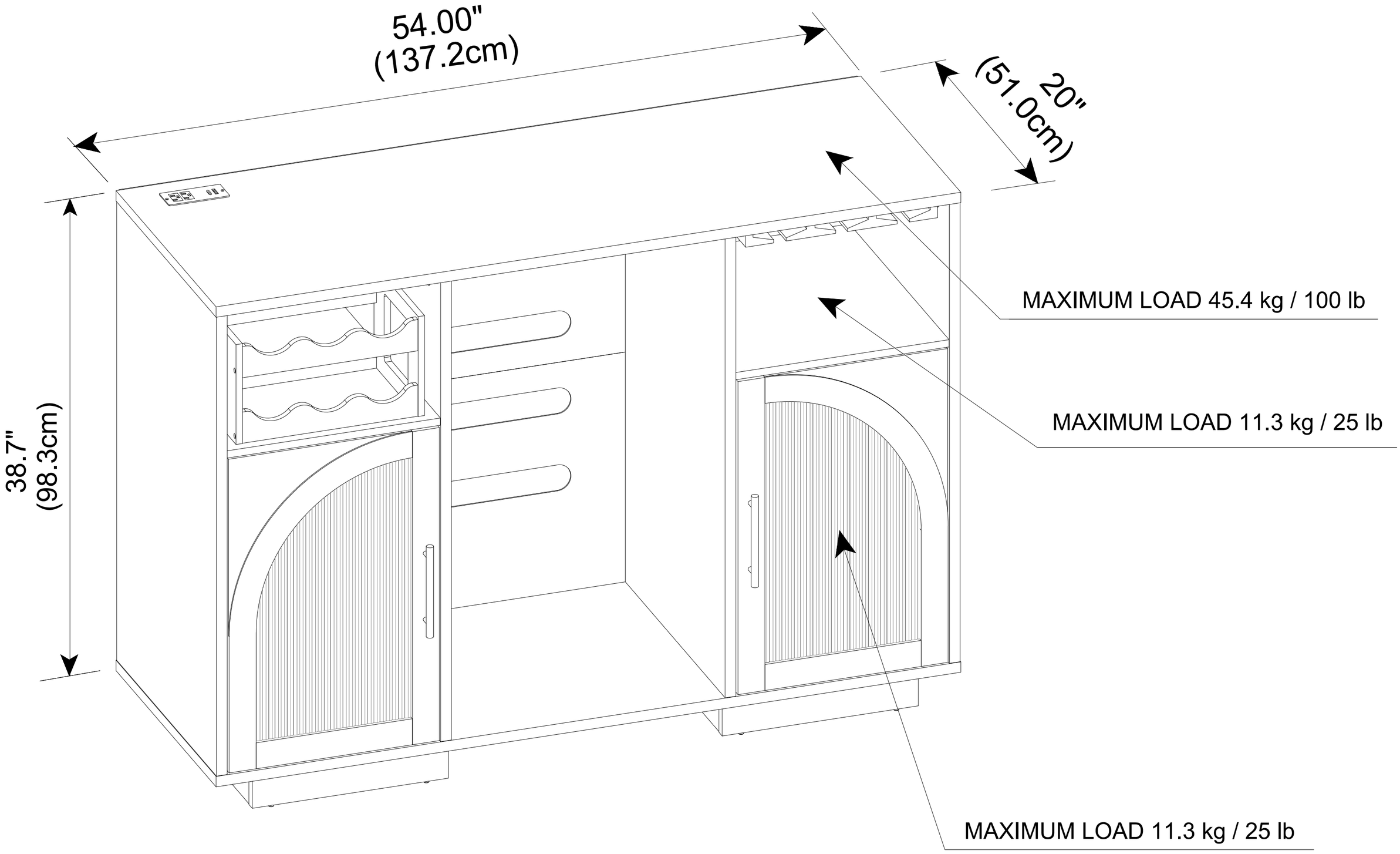

SPECIFICATIONS

ASSEMBLED DIMENSIONS(W x D x H)	54.00 x 20 x 38.7 in 137.2 x 51.0 x 98.3 cm
MAXIMUM TOP LOAD	100 lb (45.4 kg)