ASSEMBLY INSTRUCTION

STEP 1

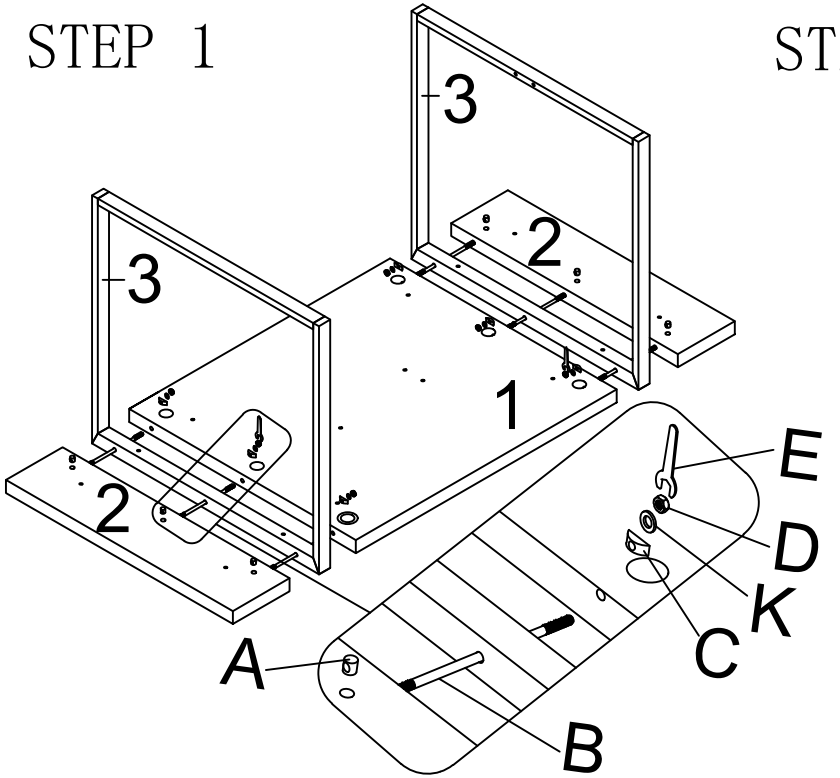

STEP 2

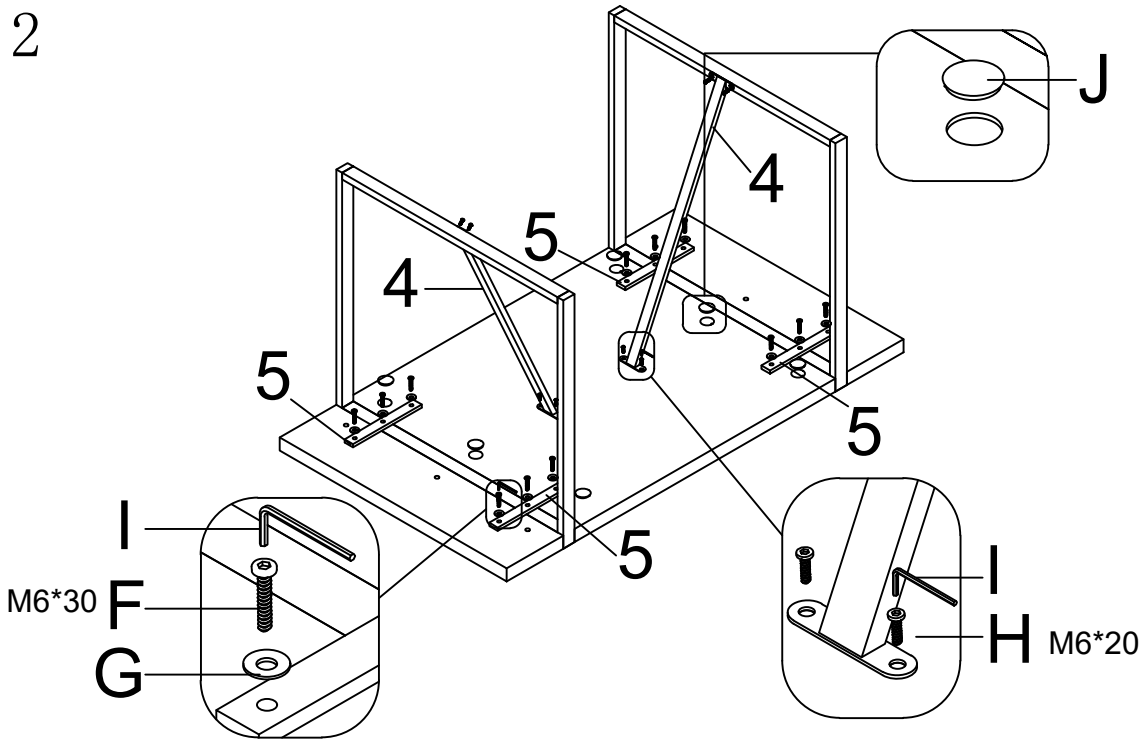

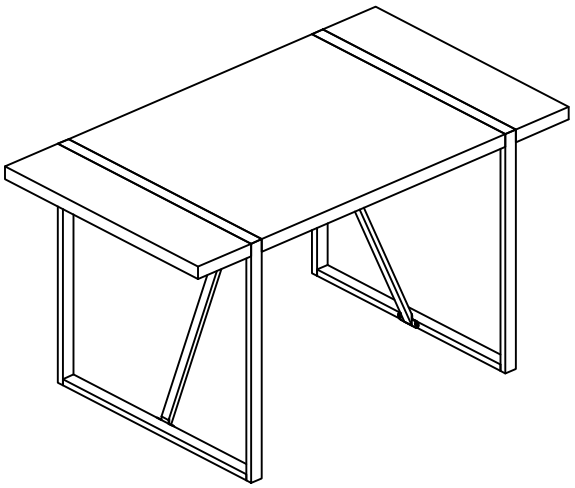

1 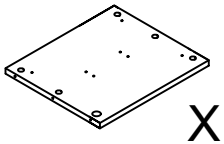 X1	2 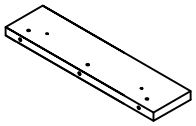 X2	3 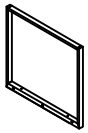 X2	4 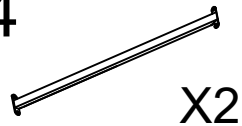 X2	5 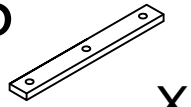 X4
A 6pcs	B 6pcs	C 6pcs	D 6pcs	E 1pc
F M6*30 12pcs	G 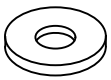 12pcs	H M6*20 8pcs	I 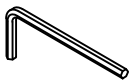 1pc	J 6pcs
K 6pcs				