ASSEMBLY INSTRUCTIONS
30INCH BATH VANITY COMBO

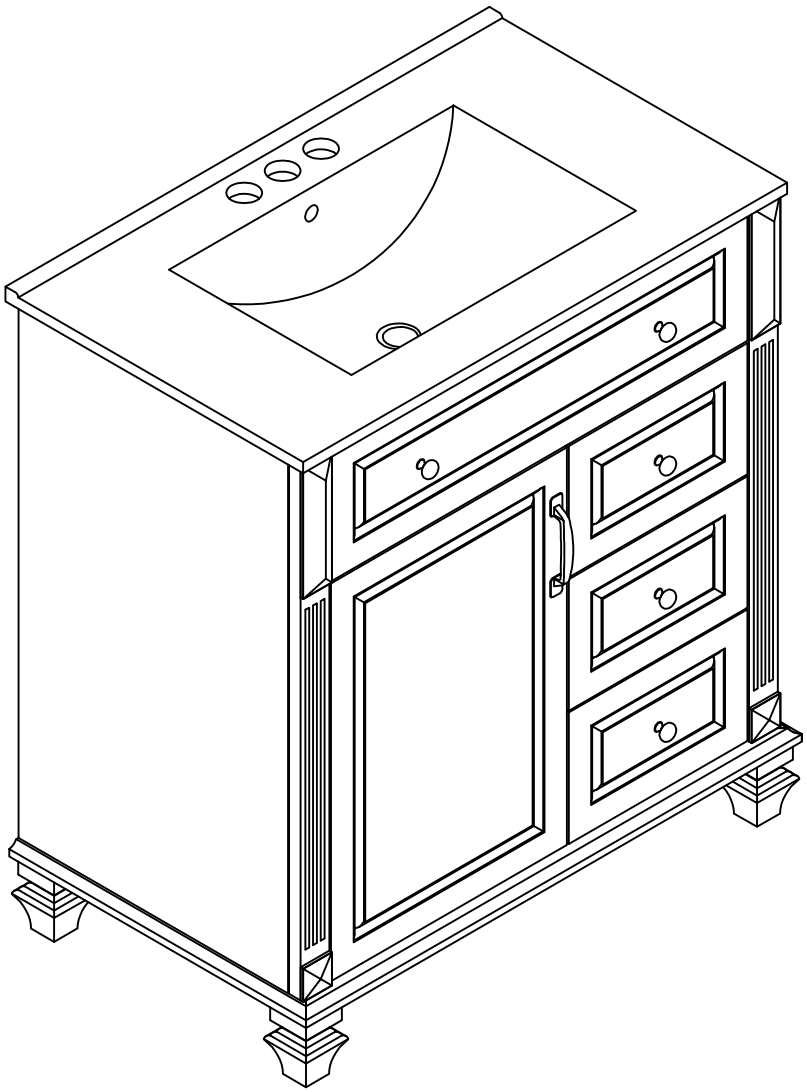

Thank you for purchasing this quality product. Be sure to check all packing material carefully for small parts which may have come loose inside the carton during shipment. Separate, identify and count all parts and hardware. Compare with the parts list to be sure all parts are present.
"DO NOT TIGHTEN SCREWS UNTIL COMPLETELY ASSEMBLED"

* Use of power tool to assemble this product will invalidate any claim and damage this product making unsafe!!!
* Please assemble on a clean soft surface to avoid damage.

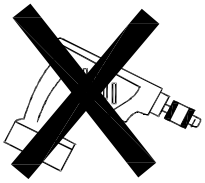

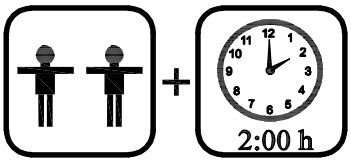

Tools Required

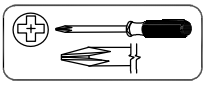

(Not Included)

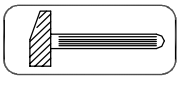

(Not Included)

IMPORTANT:
PLEASE READ INSTRUCTION BEFORE STARTING THE ASSEMBLY

Before Installation

Important - Please read these instructions fully before starting assembly

Thank you for purchasing this quality product. Be sure to check all packing materials carefully for small parts, which may have come loose inside the carton during shipment. Identify and count all items according to the PARTS LIST and/or HARDWARE LIST shown below. Check you have all the components and tools listed on the following pages.

. We recommend that you assemble this product with the assistance of another person; this will make the assembly easier, and will help eliminate damage to the product or injury to persons during assembly.

. Please do not over tighten screws or bolts until the assembly is completed.

. Keep children and animal away from the work area, small parts could choke if swallowed.

. Please put all parts on a non-abrasive floor before assembly,and follow the assembly steps to assemble your newly purchased product correctly and efficently.

If you find that you have any trouble with assembly or missing or damaged parts please contact the seller.

Cam Lock Assembly Instructions

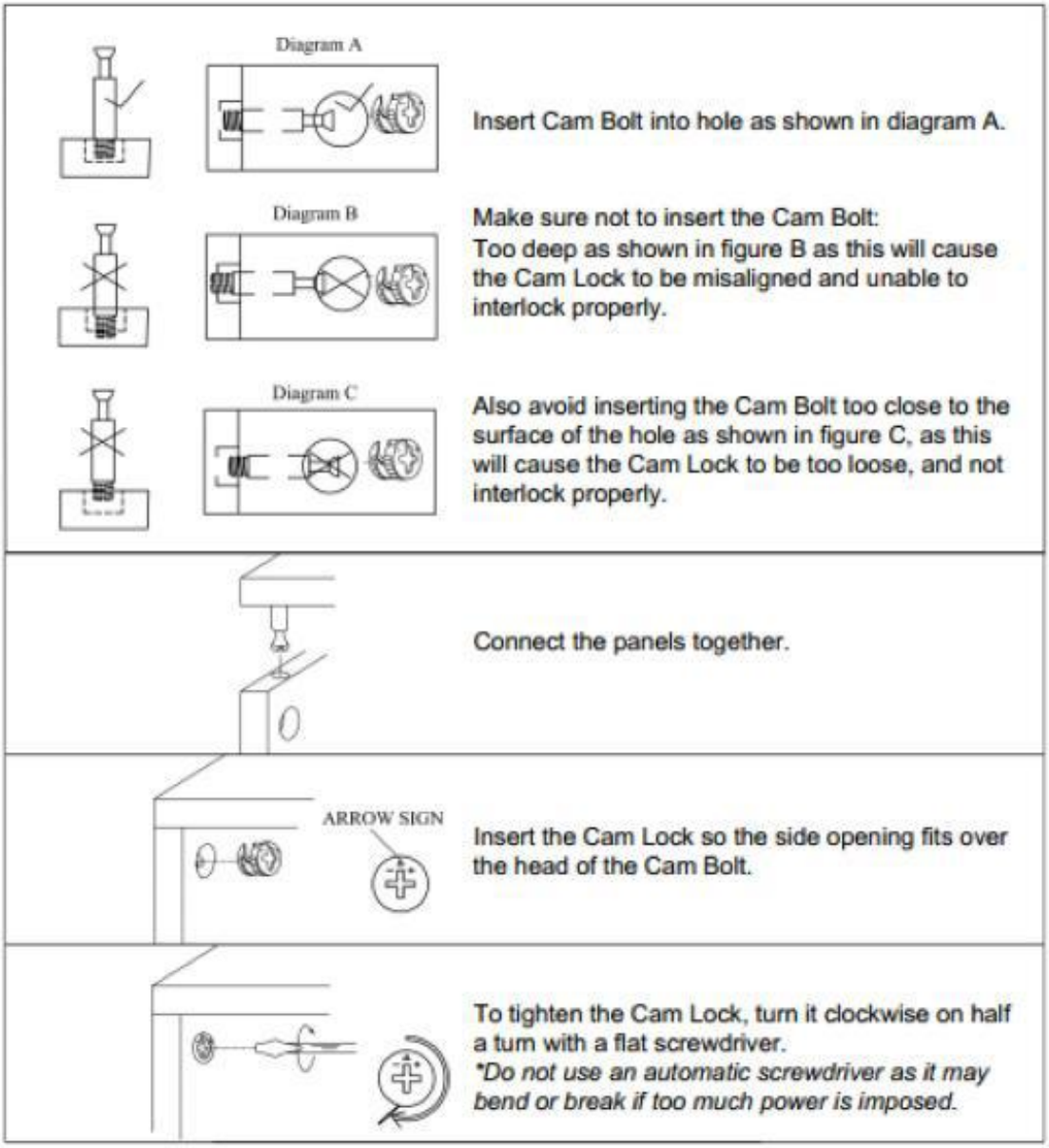

Detail View - CABINET

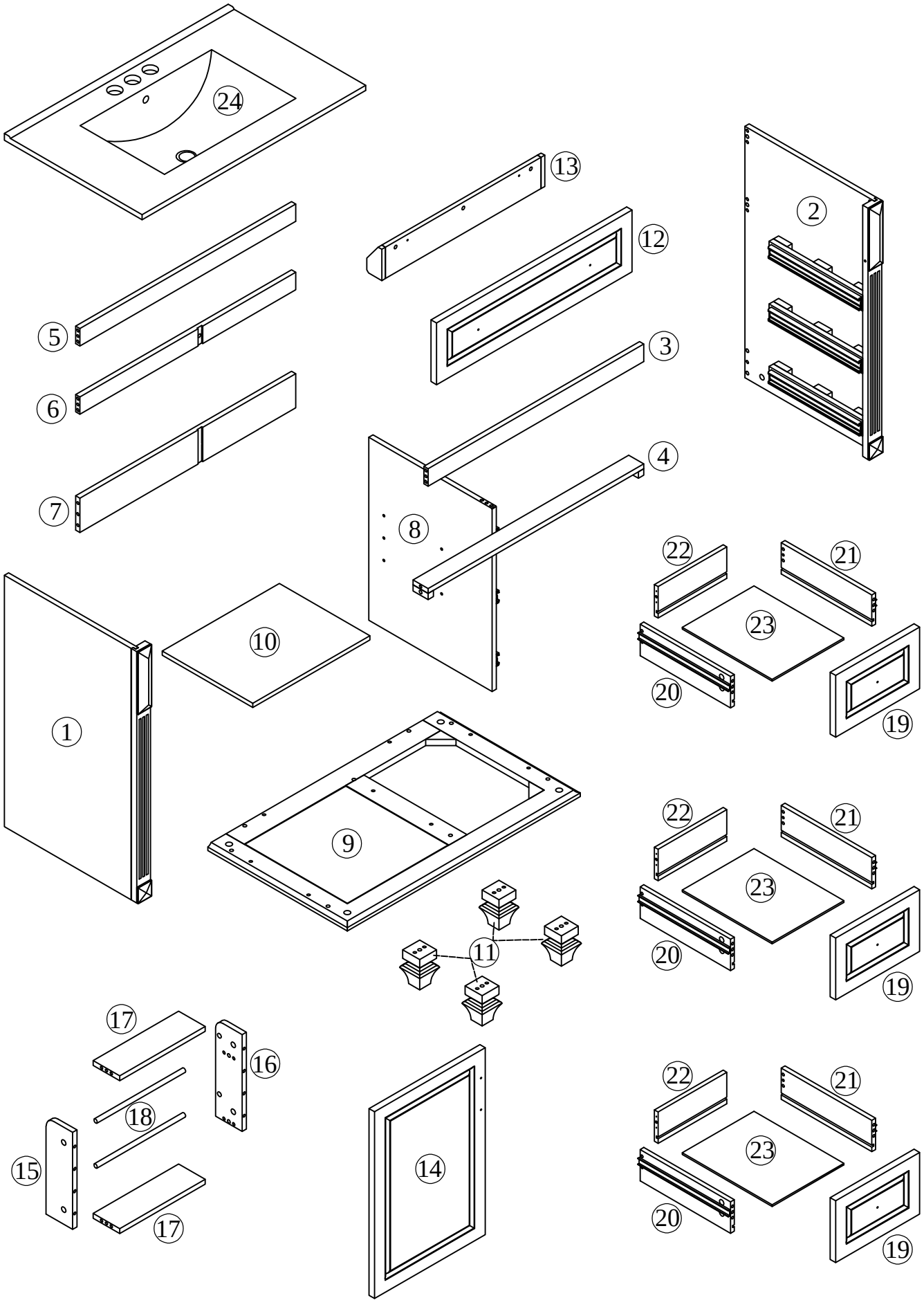

Identifying the Hardware-Identify the hardware using the illustrations below.

Part List

1 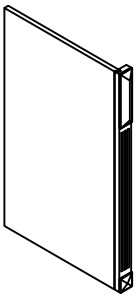 Side Panel (L) - 1pc	2 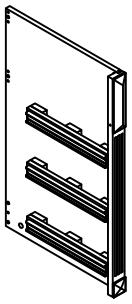 Side Panel (R) - 1pc
3 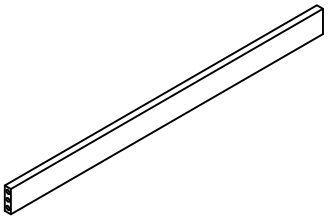 Front Top Bar - 1pc	4 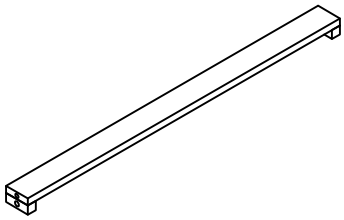 Front Middle Bar - 1pc
5 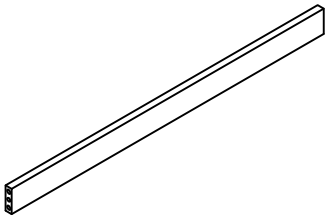 Back Top Bar - 1pc	6 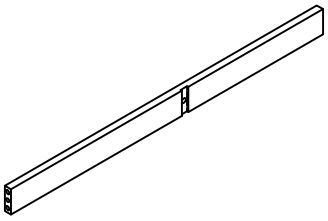 Back Middle Bar - 1pc
7 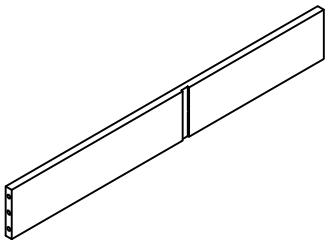 Back Bottom Bar - 1pc	8 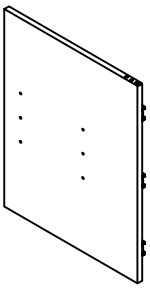 Middle Panel - 1pc
9 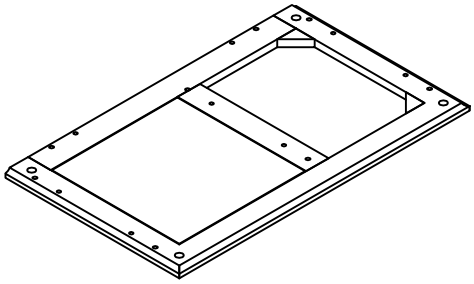 Bottom Frame - 1pc	10 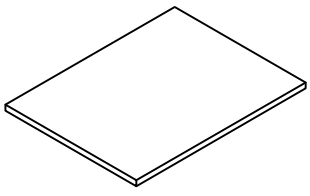 Adjustable Shelf - 1pc

Part List

11 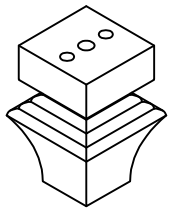 Cabinet Foot - 4pcs	12 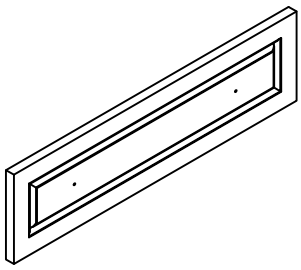 Tip-Out Drawer Face With 2 Knobs - 1pc
13 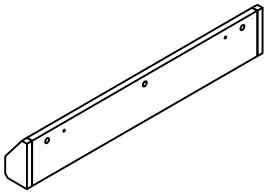 Tip-Out Drawer - 1pc	14 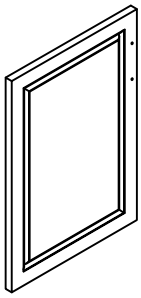 Door - 1pc
15 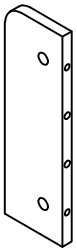 Door Side Panel (L) - 1pc	16 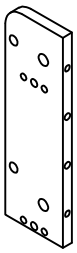 Door Side Panel (R) - 1pc
17 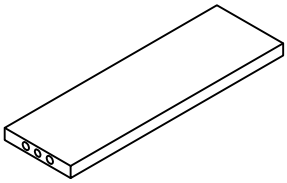 Door Middle Panel - 2pcs	18 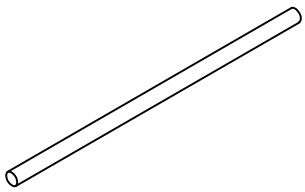 Round Bar - 2pcs
19 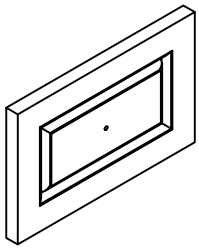 Drawer Face - 3pcs	20 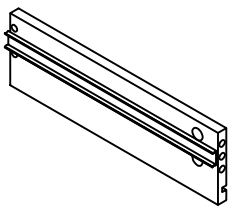 Drawer Side Panel (L) - 3pcs

Part List

21 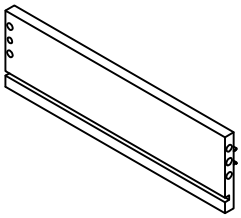 Drawer Side Panel (R) - 3pcs	22 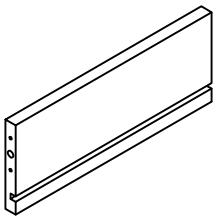 Drawer Back Panel - 3pcs
23 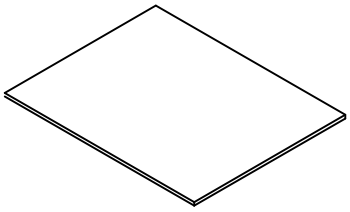 Drawer Bottom Panel - 3pcs	24 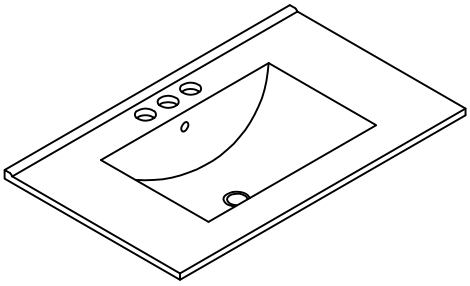 Sink - 1pc

Hardware List

A 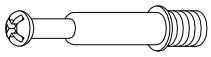 Ø6x35mm	B 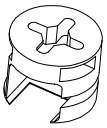 ø14.5x9.5mm	C 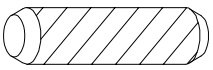 Ø8x30mm
Three in one bolts (39pcs)	Three in one lock (39pcs)	Wood dowel (46pcs)
D  ø5/16"x30mm	E  ø1/4"x28mm	F  ø5/16"x16x1mm
Hex-Head bolts(4pcs)	Hex-Head bolts(2pcs)	Washer(6pcs)
G 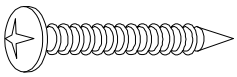 ø6xø3x12mm	H 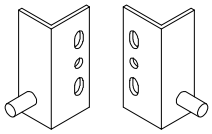 41x28x15mm	I 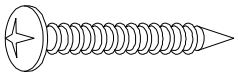 ø8xø4x25mm
Round head screw (8pcs)	Rotary Hinge (2pcs)	Round head screw (5pcs)
J 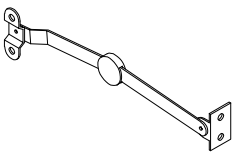	K 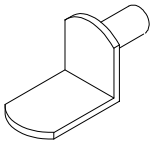	L 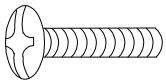 ø5/32"x35mm
Support Arm (1pc)	Shelf Pin (4pcs)	Handle screw (2pcs)
M 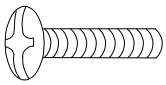 ø5/32"x25mm	N 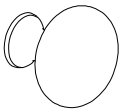	O  128x18x23mm
Handle screw (5pcs)	Knob (5pcs)	Handle (1pc)
P 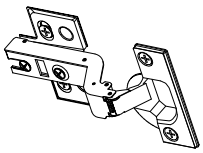	Q  ø7xø3.5x15mm	R 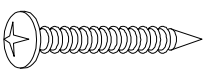 ø8xø4x32mm
Damping hinge (2pcs)	Flat head screw (12pcs)	Round head screw (12pcs)
S 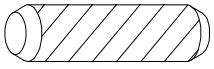 ø6x30mm	T  4mm	U 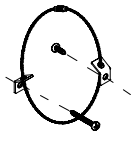
Wood dowel (12pcs)	Allen key(1pc)	Anti fall hardware (2sets)

STEP: 1

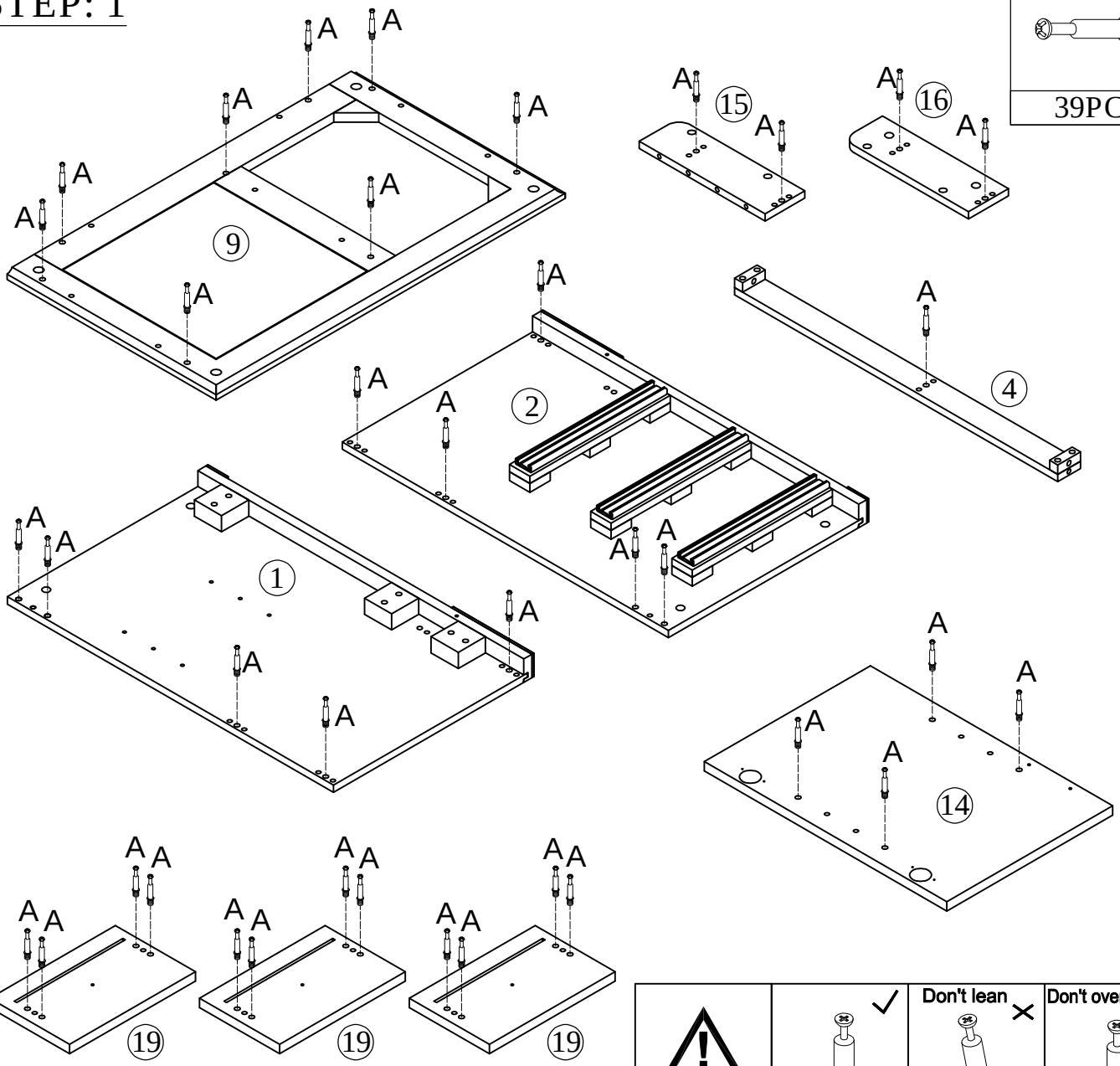

A
39PCS
9
15
16
2
4
1
14
19
19
19

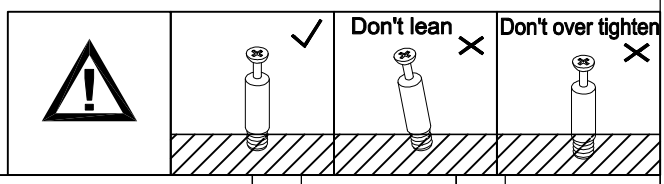

Don't lean
Don't over tighten

STEP: 2

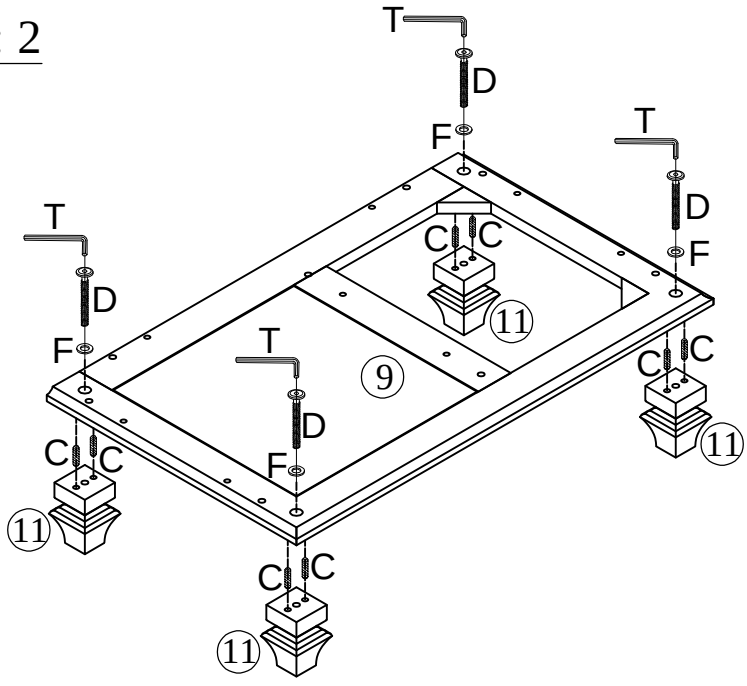

T
D
F
C
C
11
9

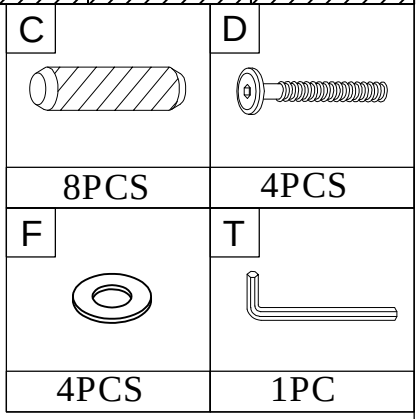

C
8PCS
D
4PCS
F
4PCS
T
1PC

STEP: 3

G	H	I	L	N
	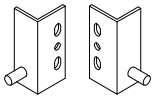	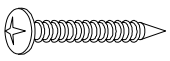	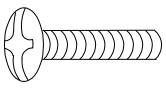	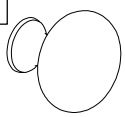
4PCS	2PCS	3PCS	2PCS	2PCS

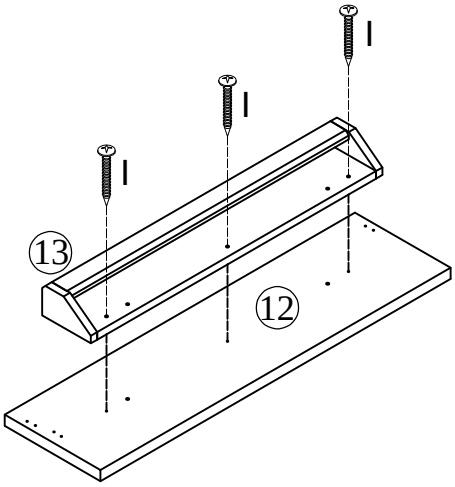

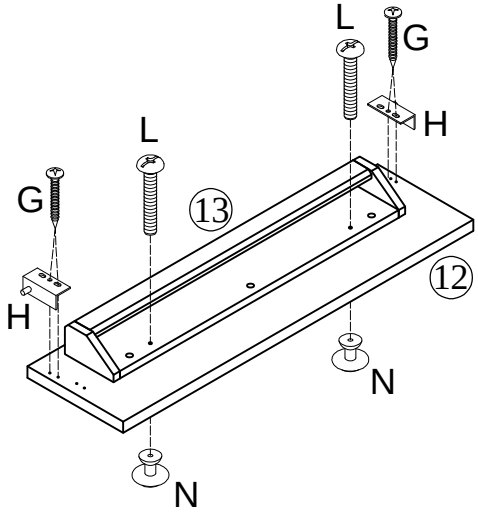

STEP: 4

B	C	I
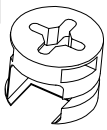	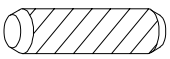	
1PC	2PCS	2PCS

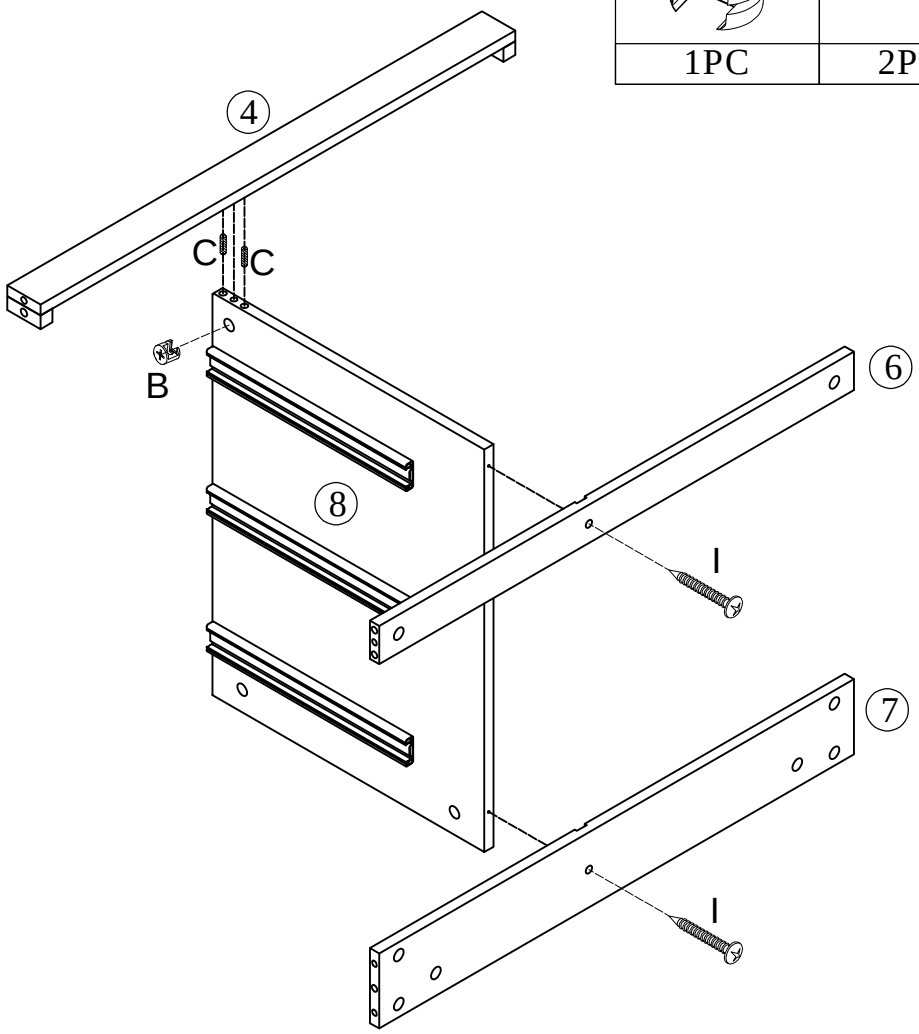

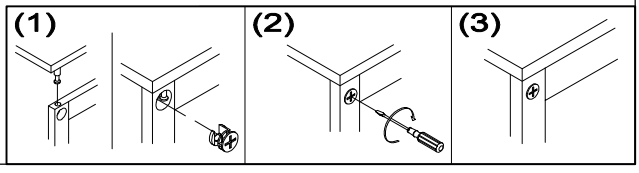

STEP: 5

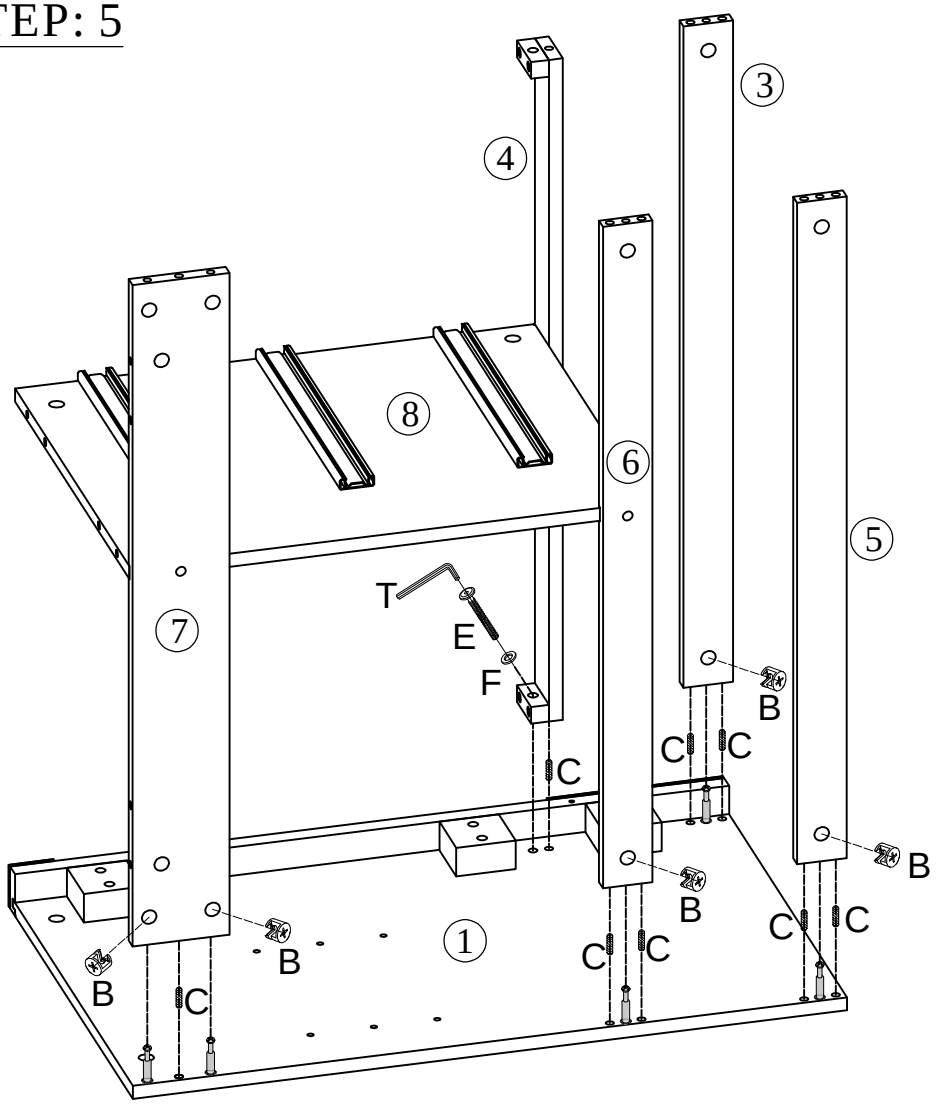

B	C
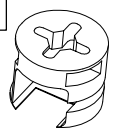	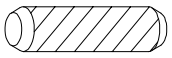
5PCS	8PCS

E	F
	
1PC	1PC

T

1PC

STEP: 6

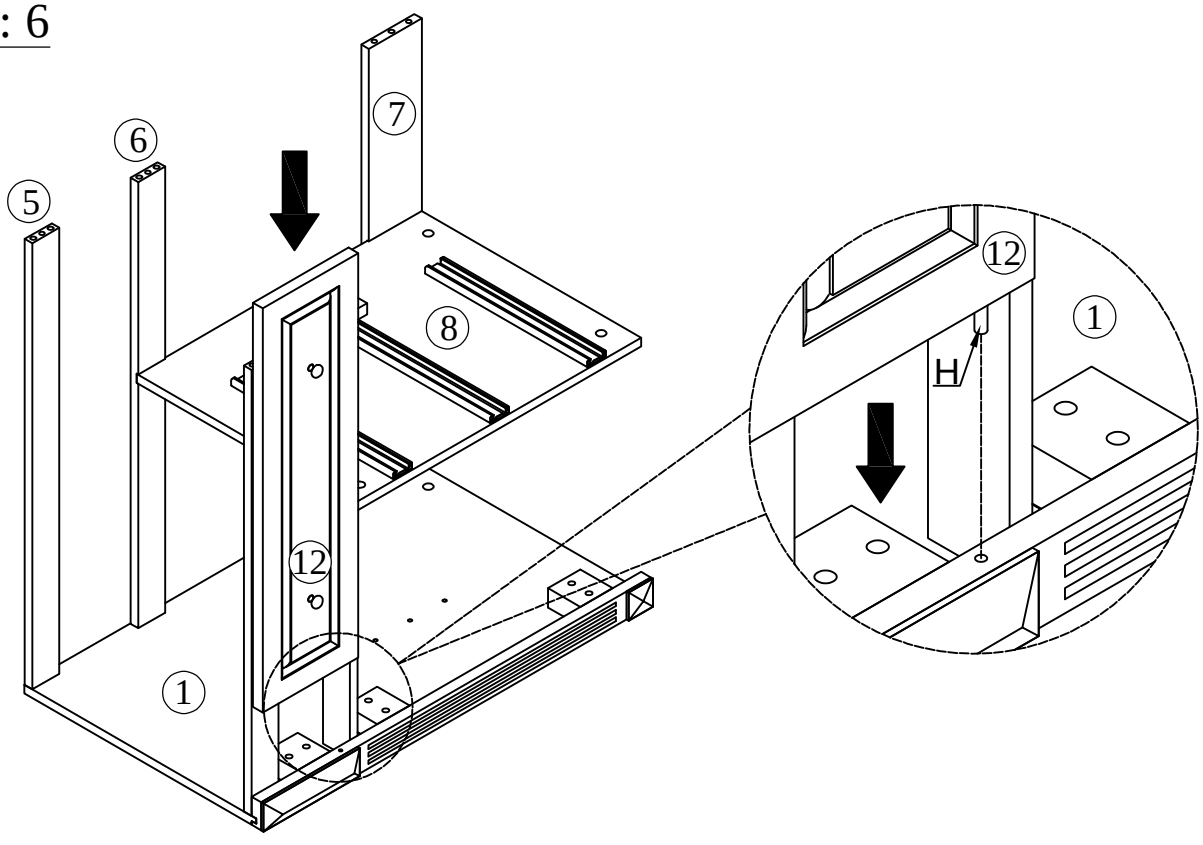

STEP: 7

B	C	E	F	T
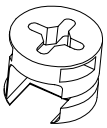				
5PCS	8PCS	1PC	1PC	1PC

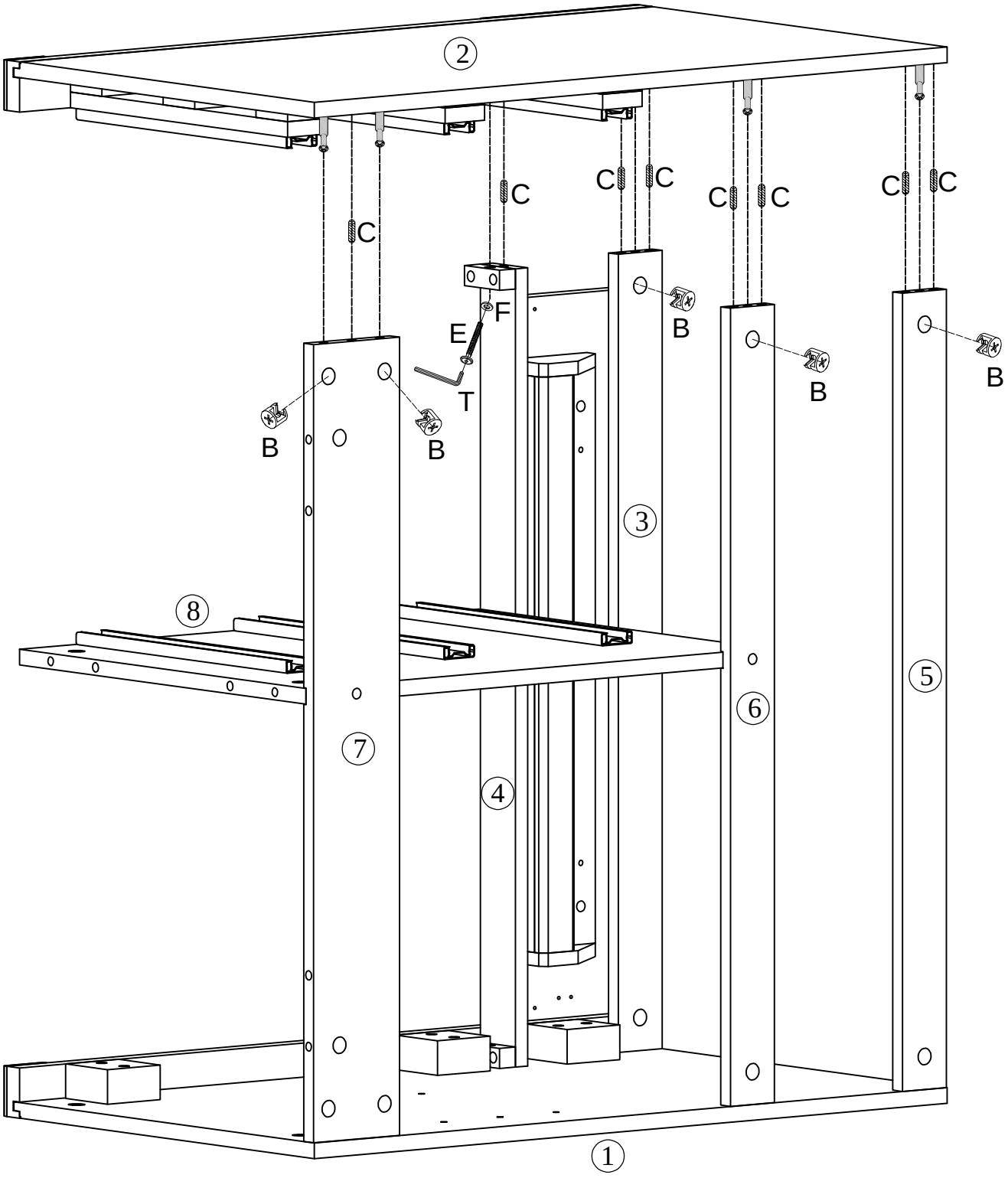

STEP: 8

B	C
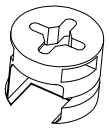	
8PCS	8PCS

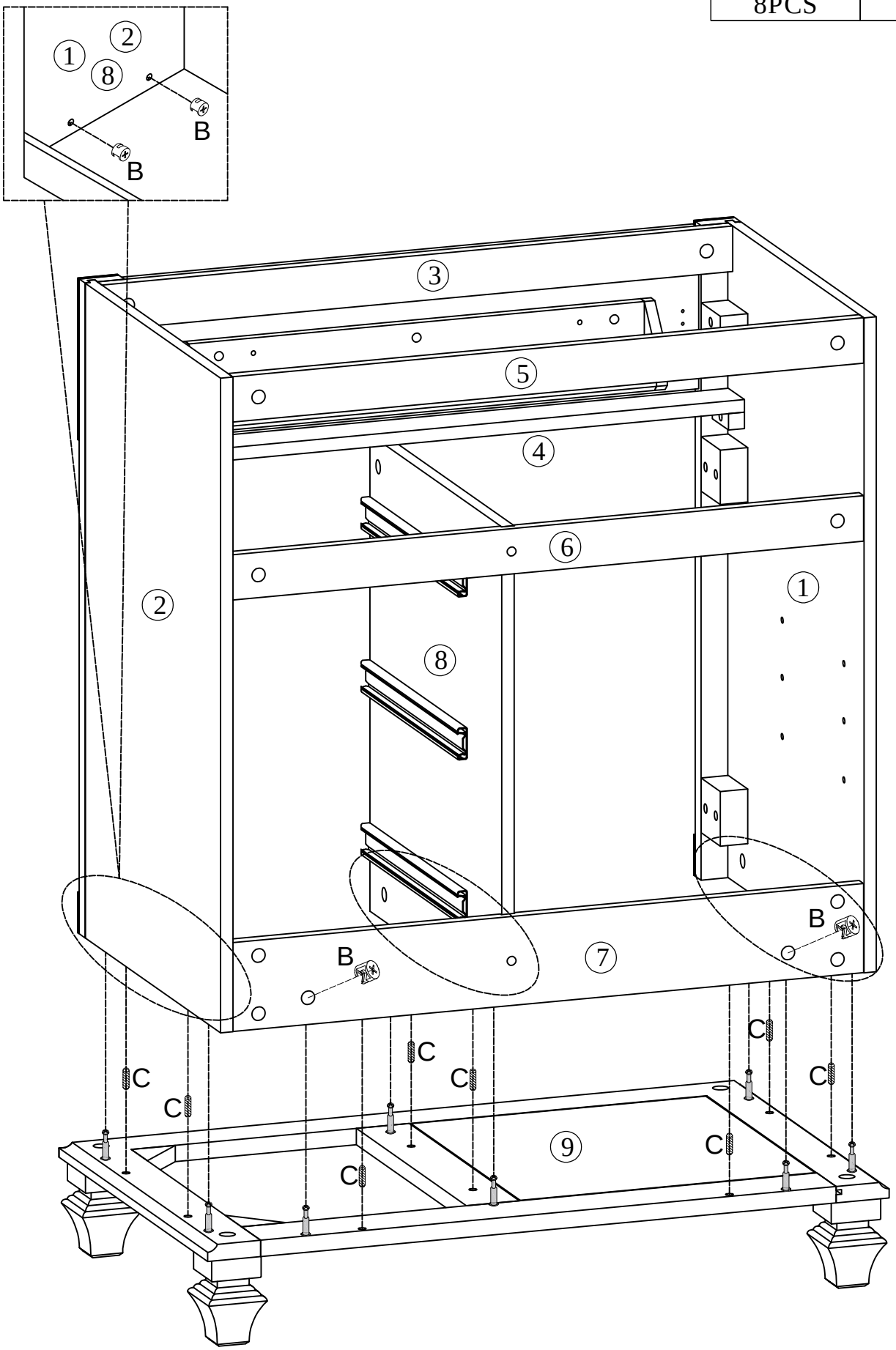

STEP: 9

G	J
4PCS	1PC

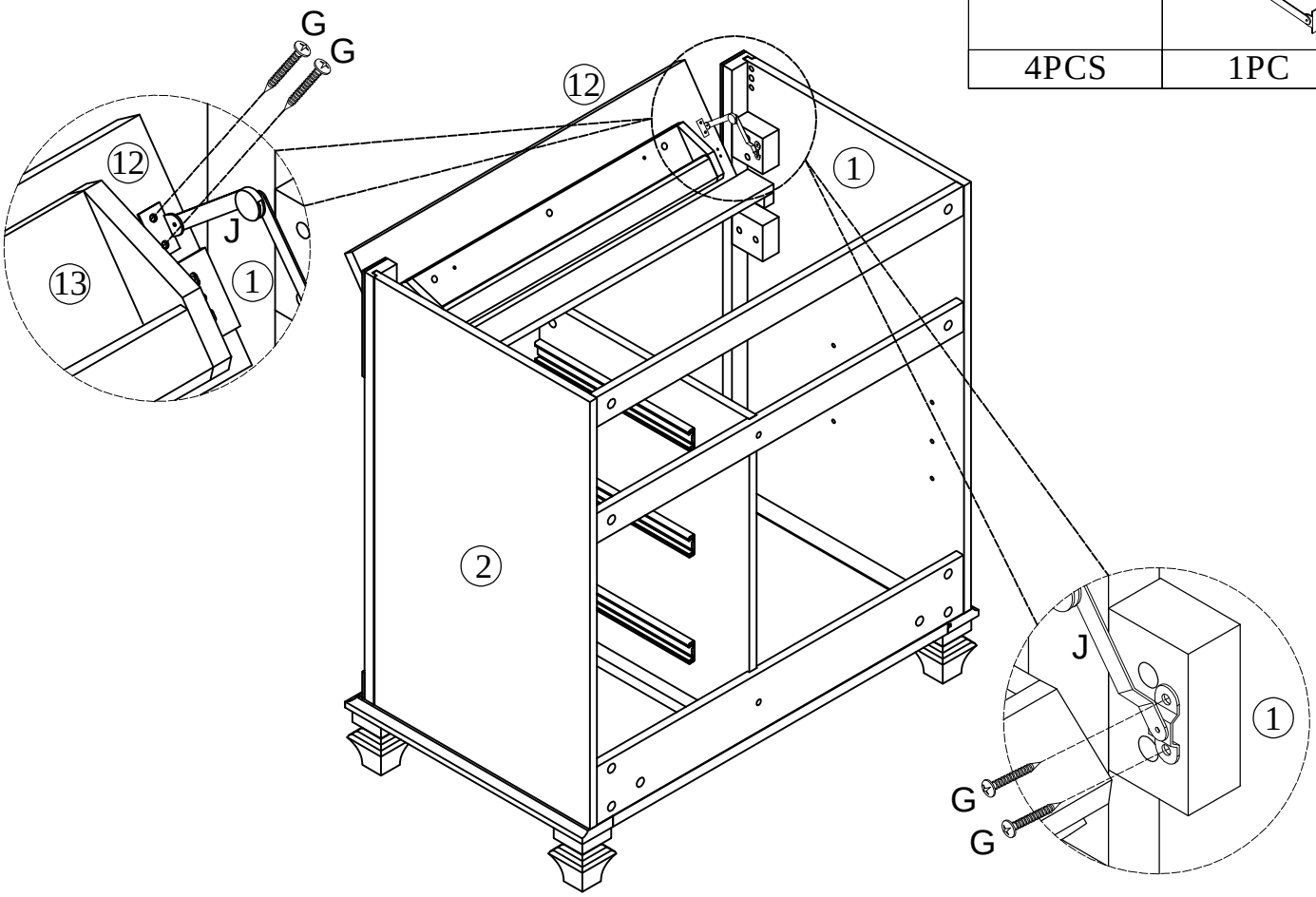

STEP: 10

K
4PCS

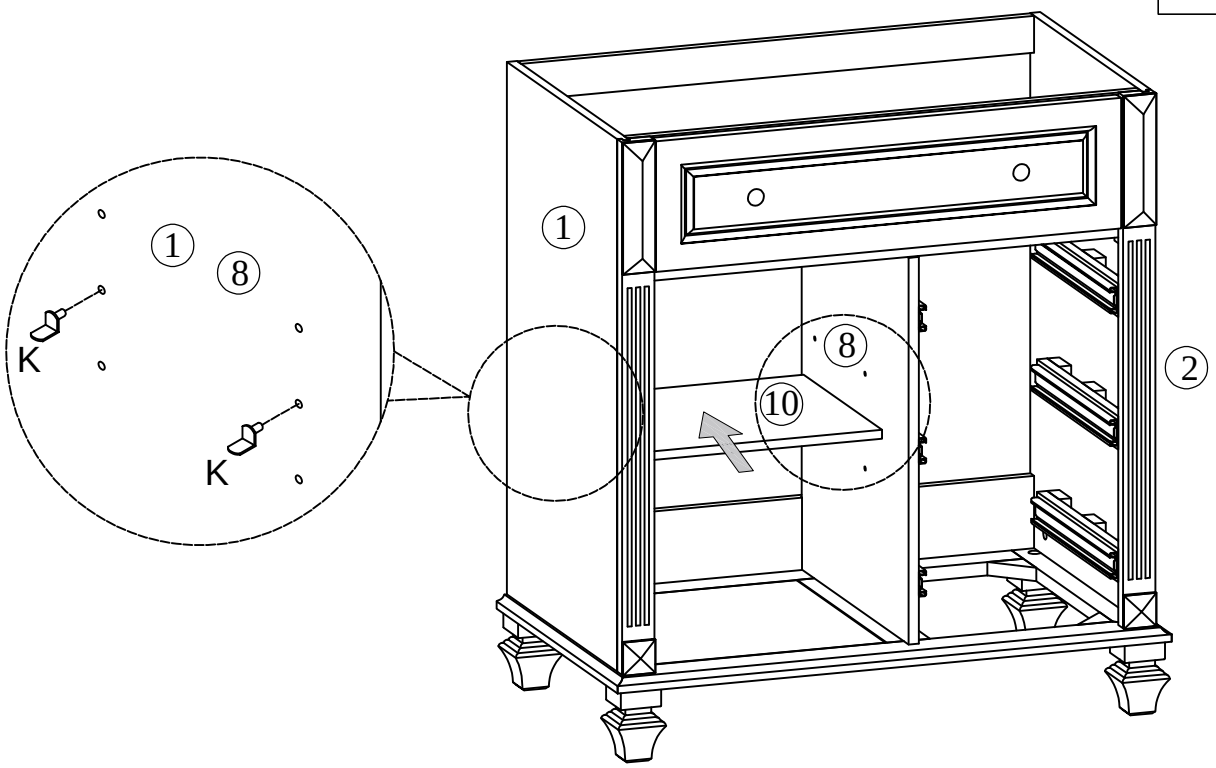

STEP: 11

B	C
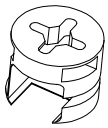	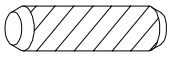
8PCS	12PCS

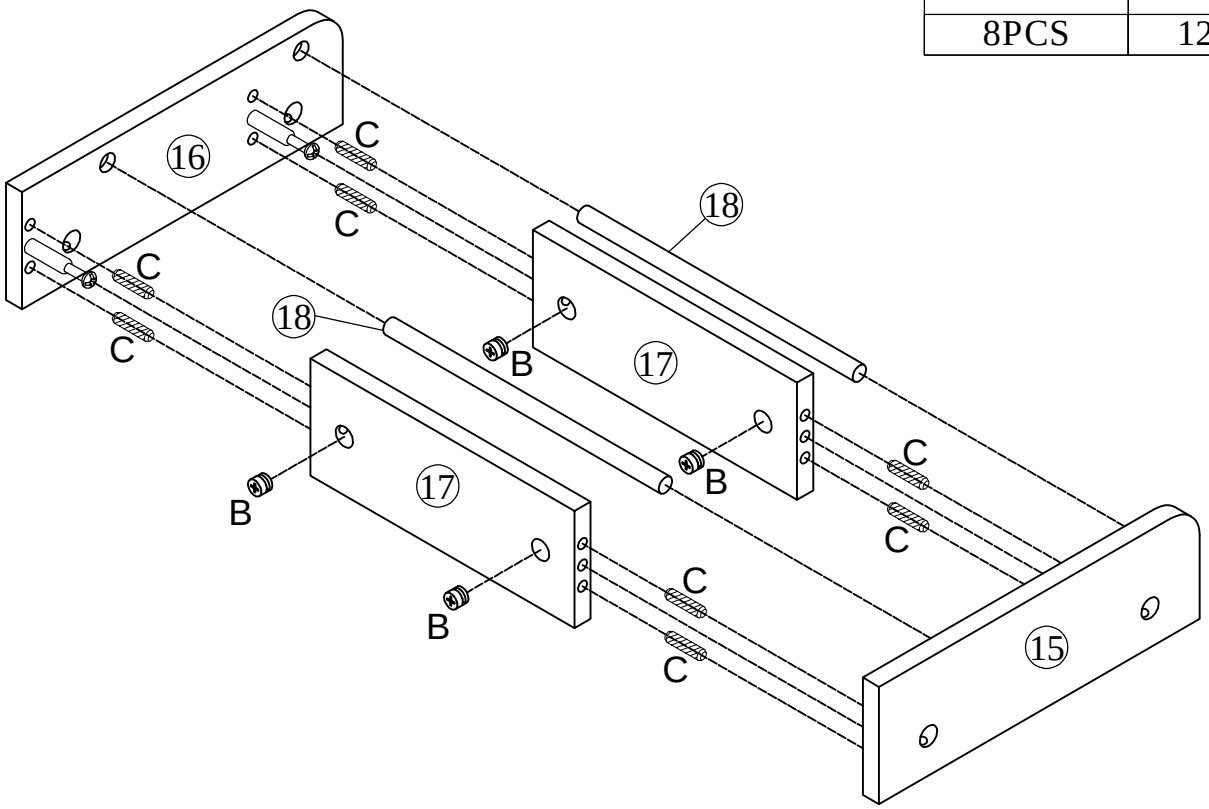

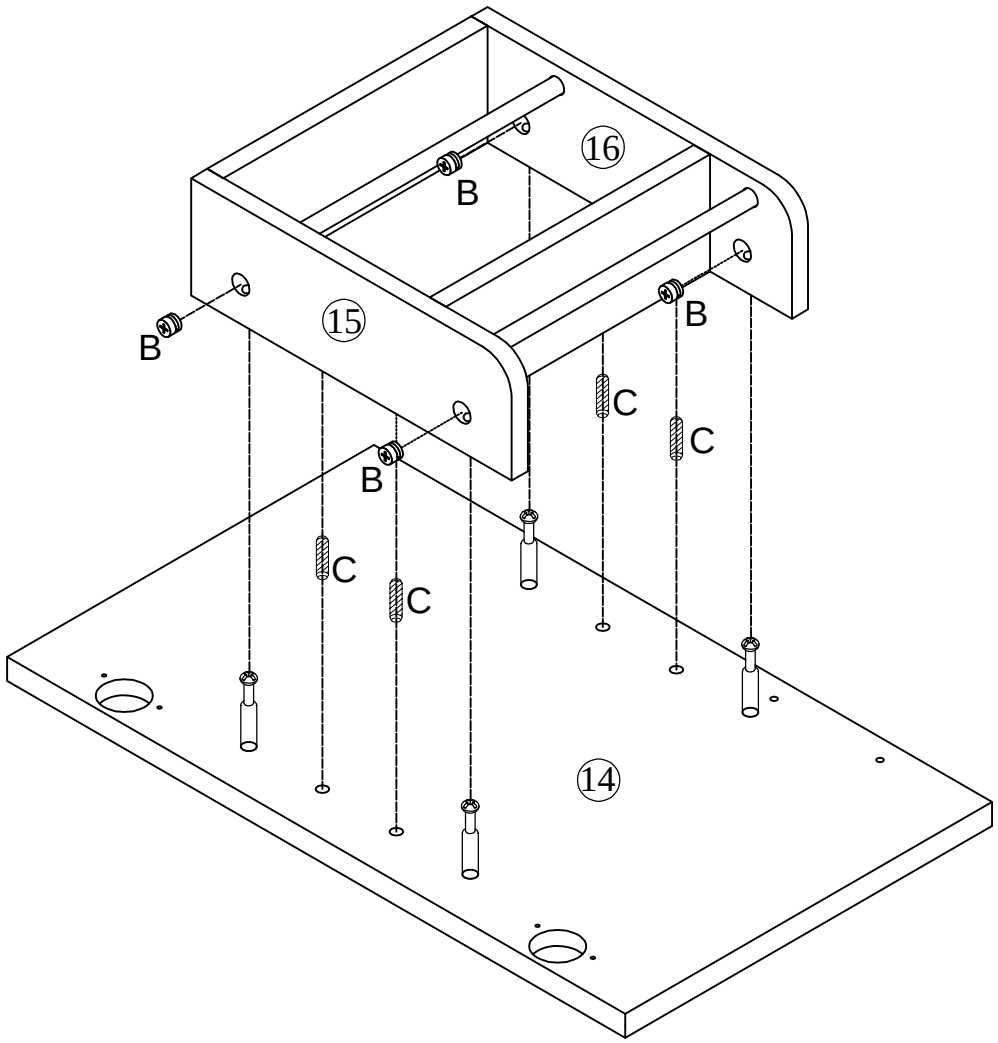

STEP: 12

P	Q
2PCS	4PCS

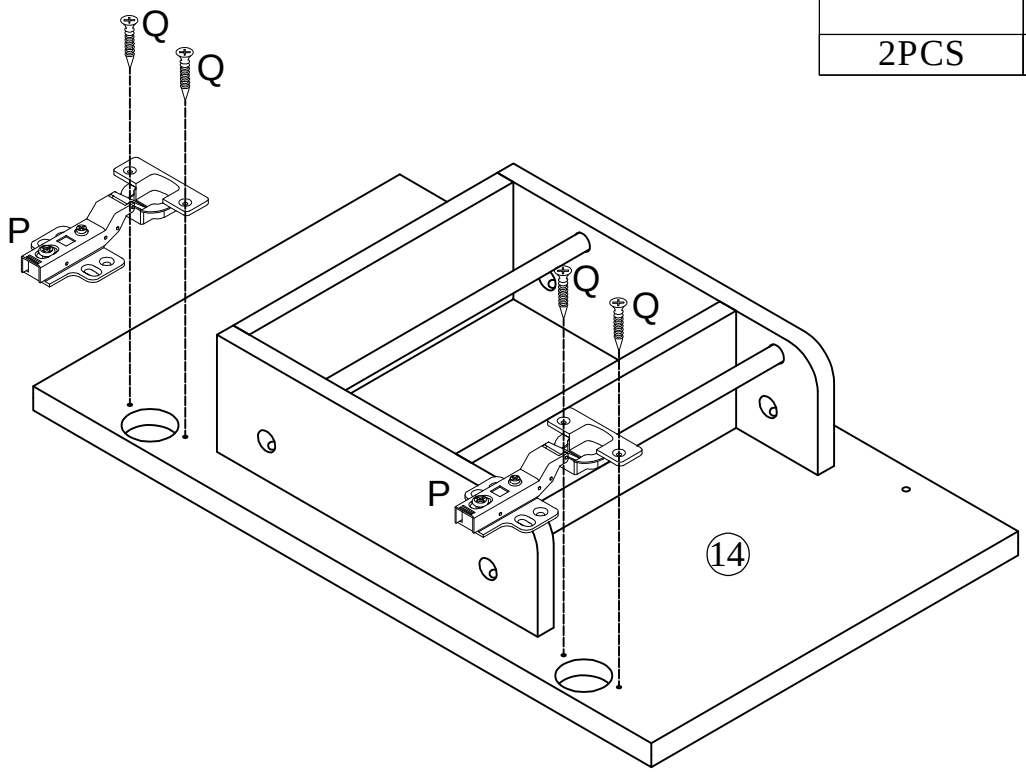

STEP: 13

M	O	Q
2PCS	1PC	8PCS

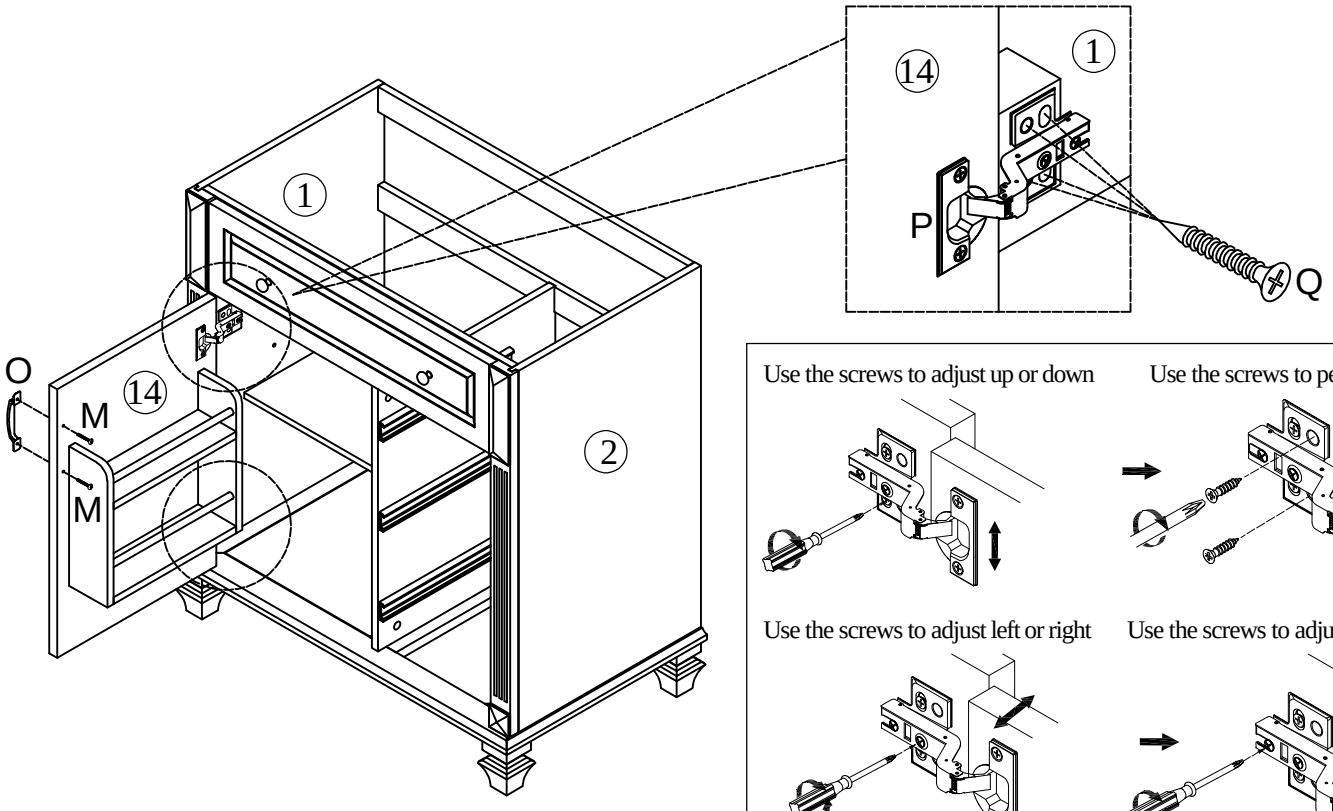

STEP: 14

B	M	N	R	S
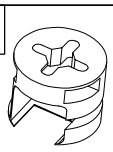	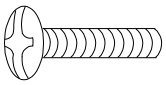	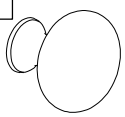		
12PCS	3PCS	3PCS	12PCS	12PCS

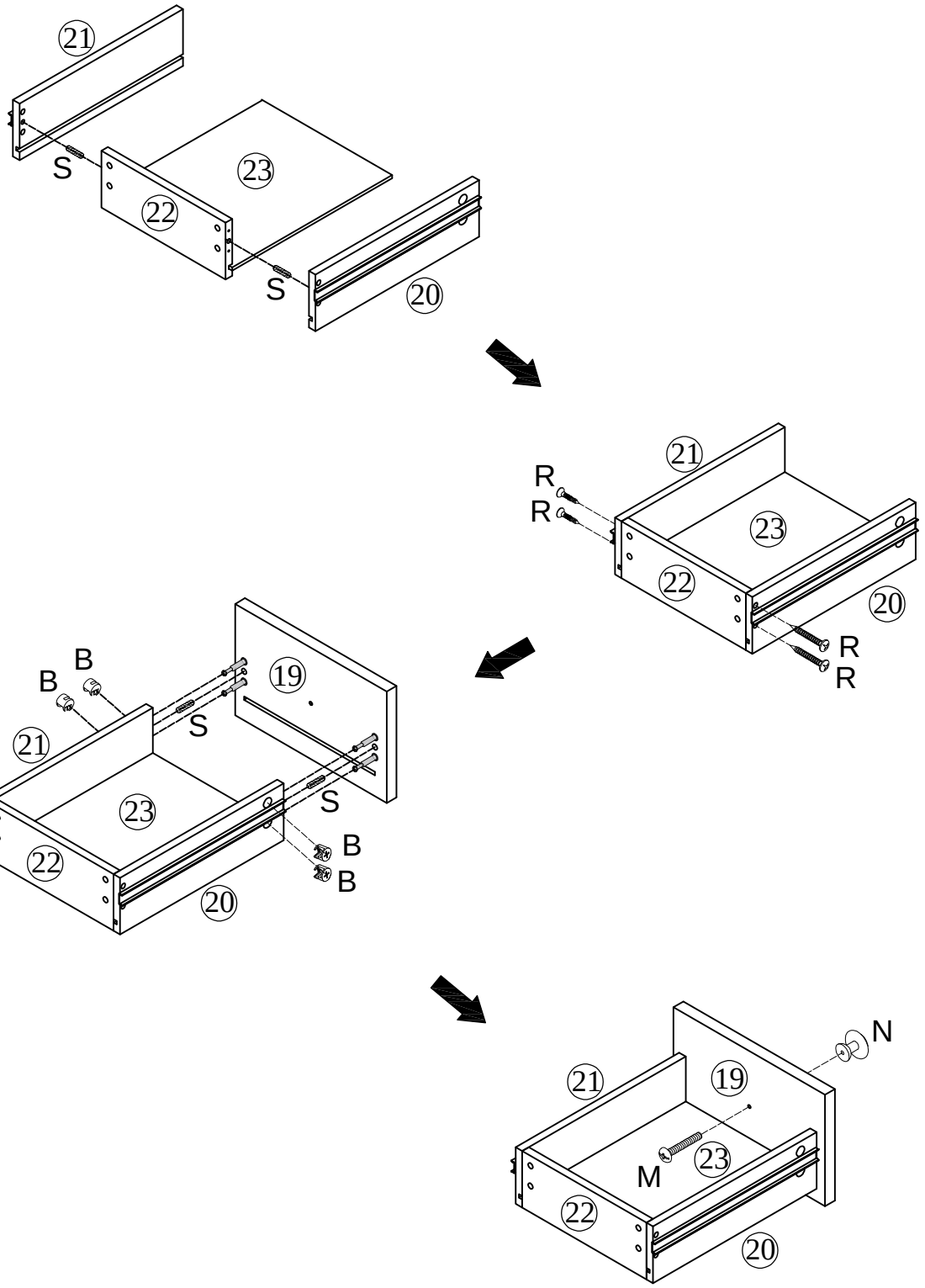

x3

STEP: 15

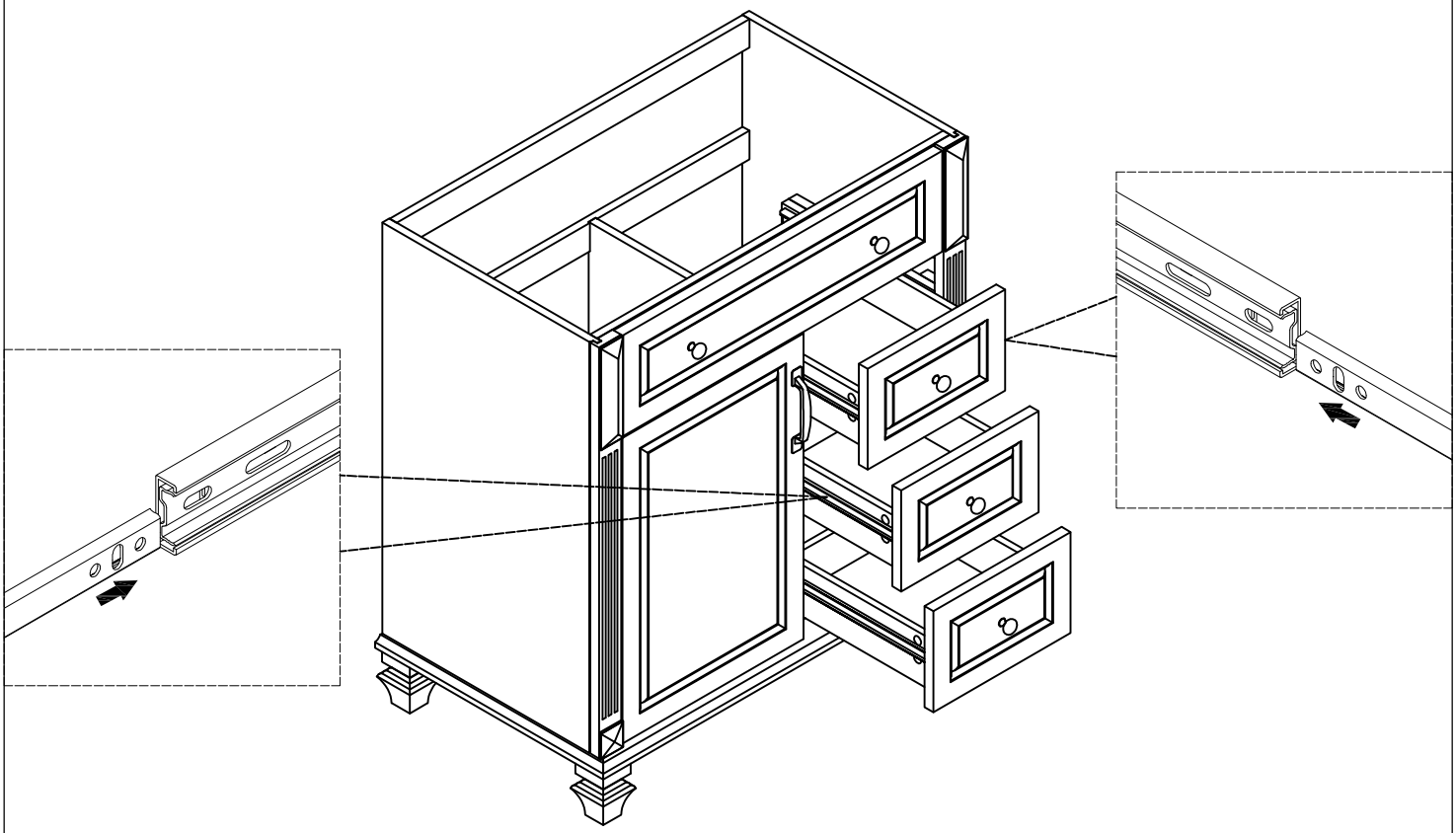

STEP: 16

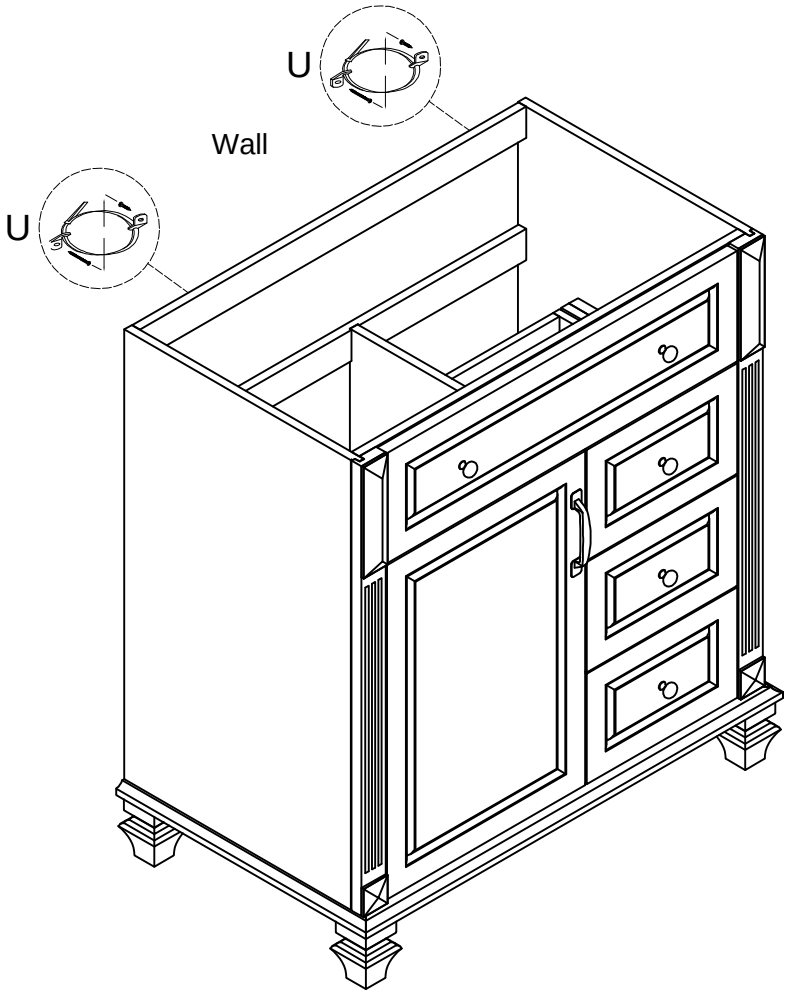

U

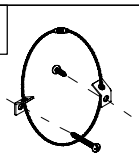

2 SETS

STEP: 17

Install the sink on the cabinet with glue.
Let stand for 24 hours

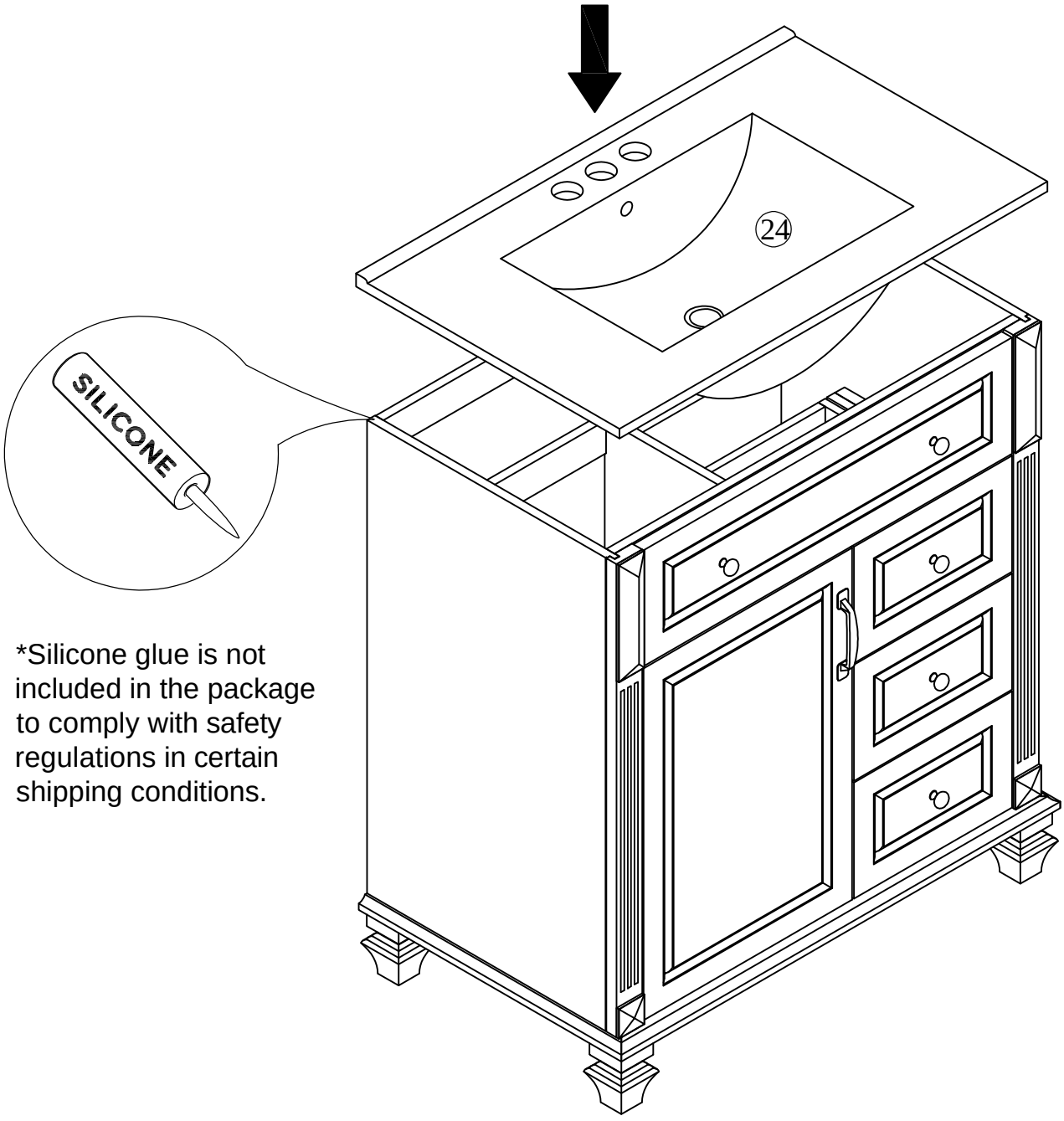

*Silicone glue is not included in the package to comply with safety regulations in certain shipping conditions.

STEP: 18

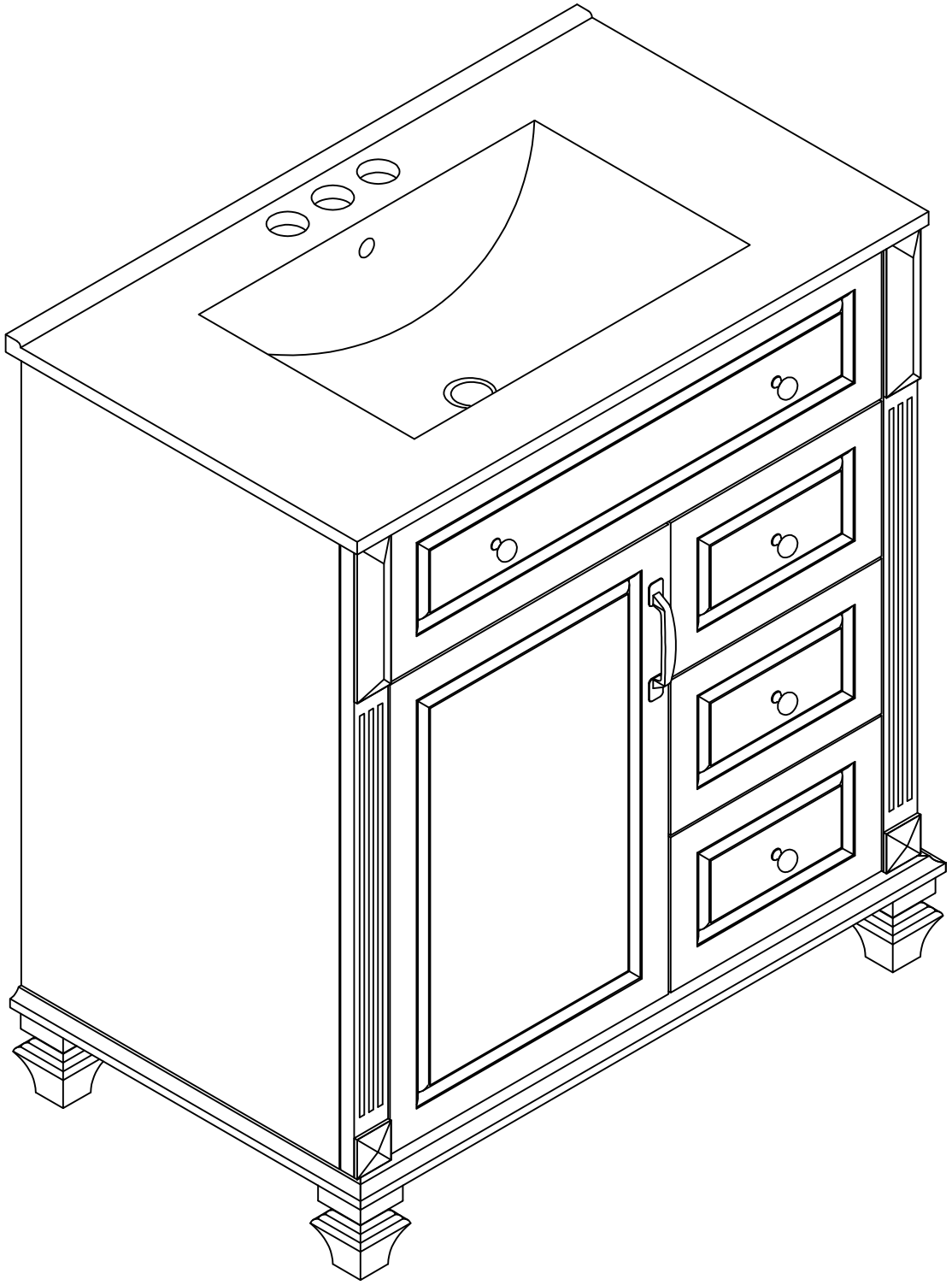



HINGE ADJUSTMENTS

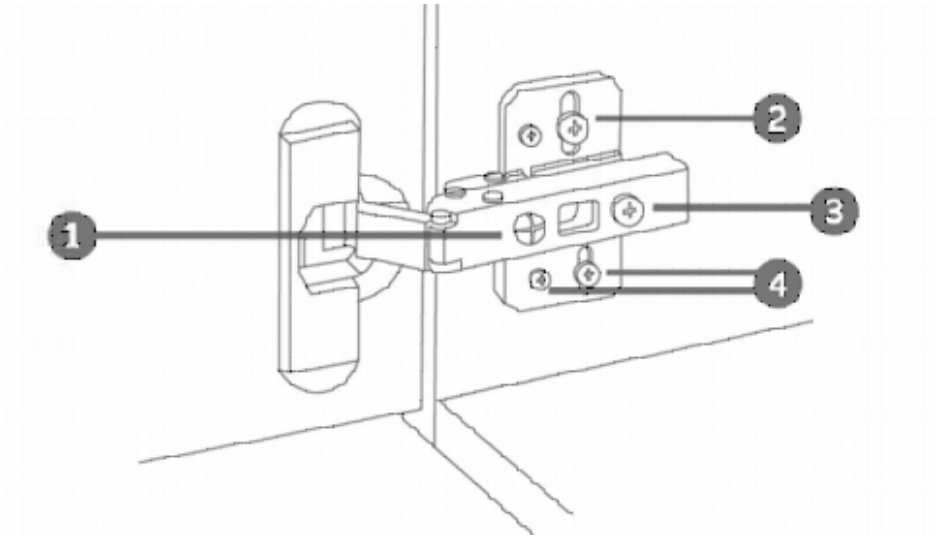

1 Sideways / Tilt adjustment

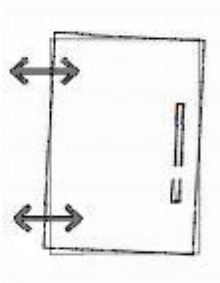

Turn the screw
clockwise to move the door further away from the side of the cabinet
anticlockwise to move the door closer to the side of the cabinet

2 4 Height adjustment

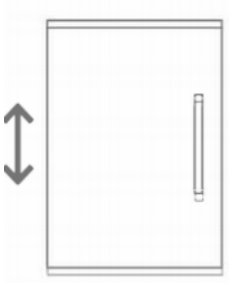

While supporting the weight of the door, turn the screws
clockwise to move the door up
anticlockwise to move the door down

3 Forward and back adjustment



If the gap between the back of the door and the cabinet is too small, and the door may not close fully. Turn the screw
clockwise to decrease the gap between the door and the cabinet
anticlockwise to increase the gap between the door and the cabinet