ACRYLIC BIN MODULE SHOWN

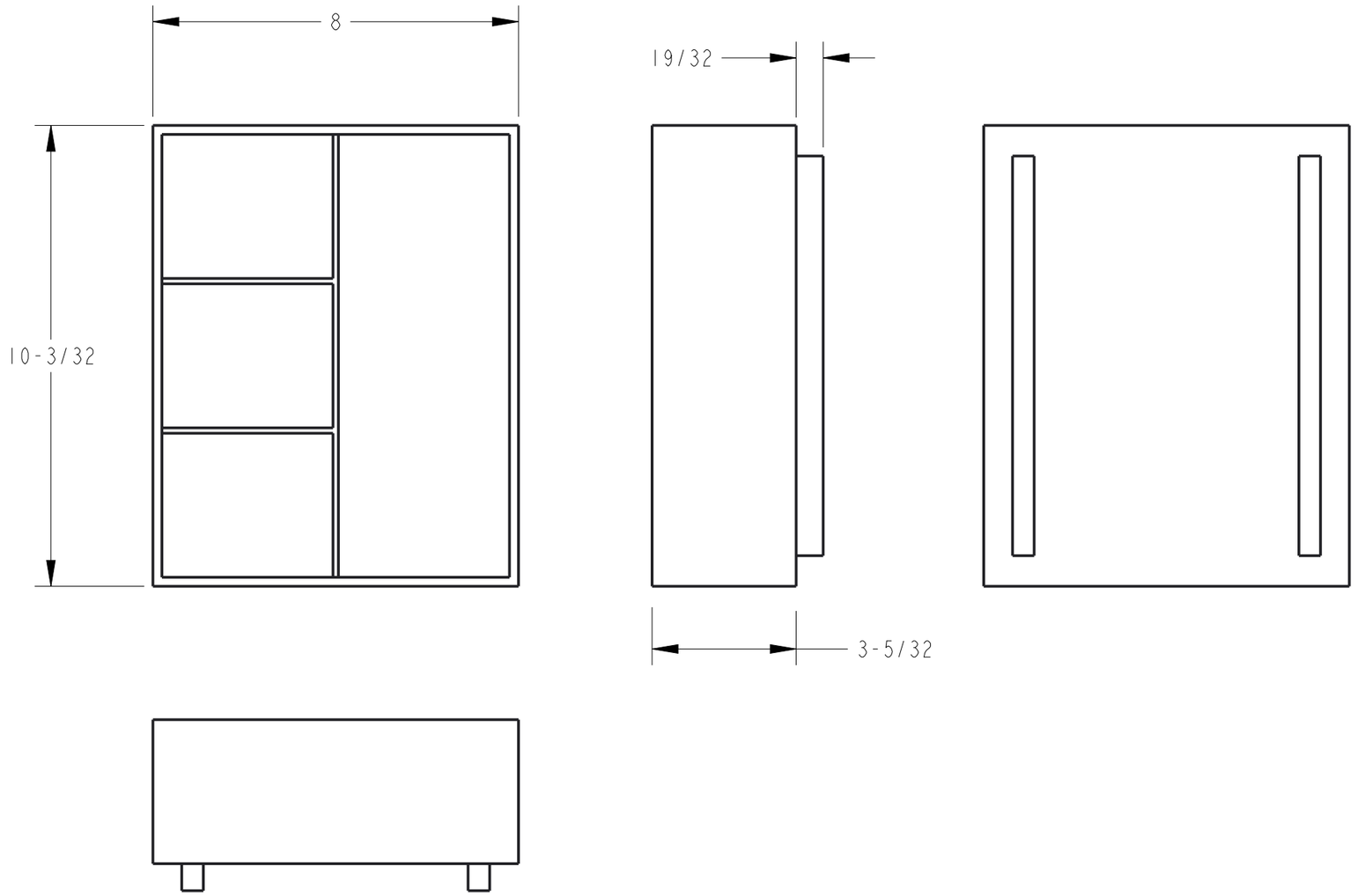

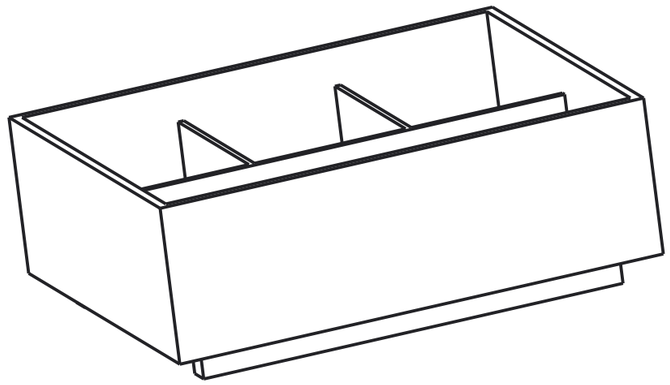

THIRD ANGLE PROJECTION		hardware resources	
MATERIAL: N/A	FINISH: N/A	DESCRIPTION: VANITY ORGANIZER SYSTEM, ACRYLIC BIN MODULE	
DRAWN BY: A.CHEN	DATE: 15MAR17		
DESIGNED BY: A.CHEN	DATE: 15MAR17	DRAWING NUMBER: VBPO-T01	REV: A
APPROVED BY: R.LAIRD	DATE: 05JUN17	SIZE: A3 / SCALE: 1:3	SHEET: 1 / 2

DOCUMENT STATUS: Released

HARDWARE RESOURCES RESERVES THE RIGHT TO CHANGE SPECIFICATIONS WITHOUT NOTICE.
IN CASE OF A DISCREPENCY, ACTUAL PART GEOMETRY SUPERSEDES THIS DOCUMENT.

THE INFORMATION CONTAINED WITHIN THIS DRAWING IS THE SOLE PROPERTY OF HARDWARE RESOURCES INC. ANY REPRODUCTION IN PART OR WHOLE WITHOUT WRITTEN PERMISSION OF HARDWARE RESOURCES INC. IS PROHIBITED.

ACRYLIC BIN MODULE (VBPO-T01) INSTALLED ON TOP OF VANITY BASE PULLOUT MODULE (VBP08-SC, SOLD SEPARATELY)

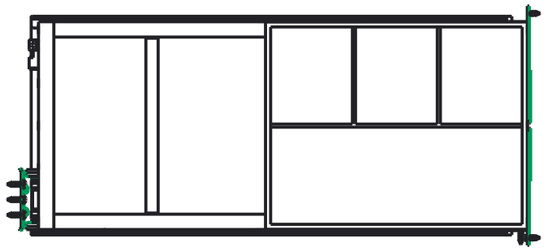

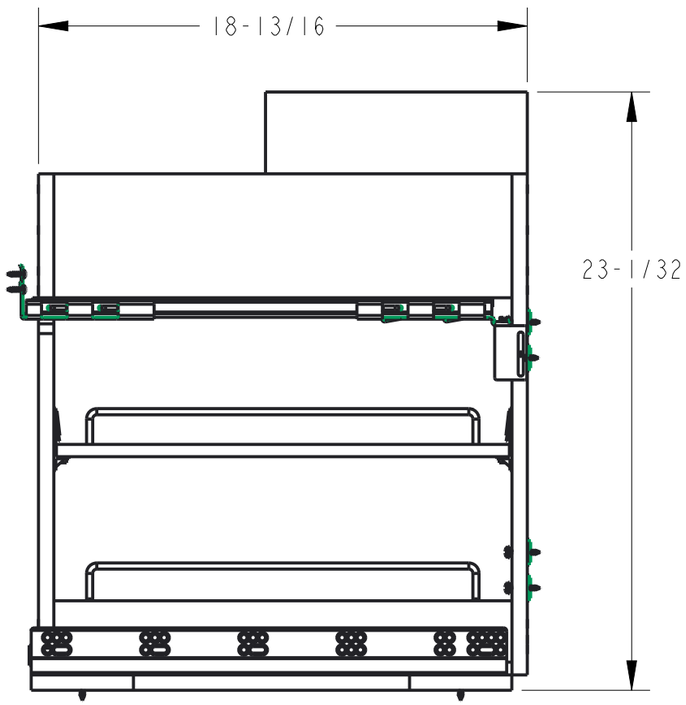

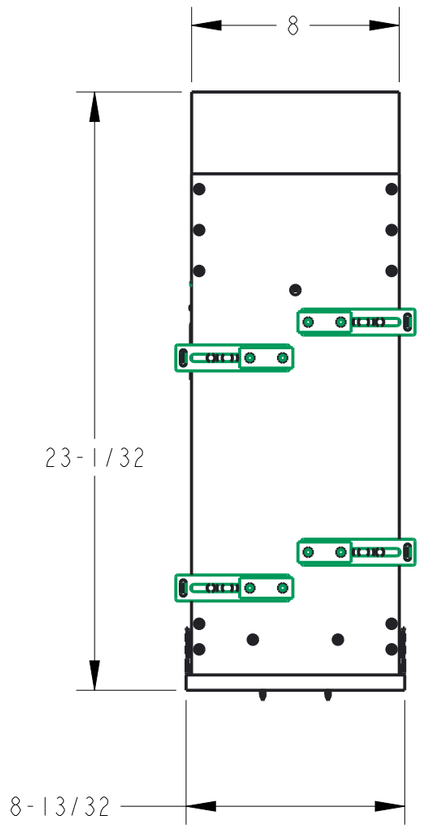

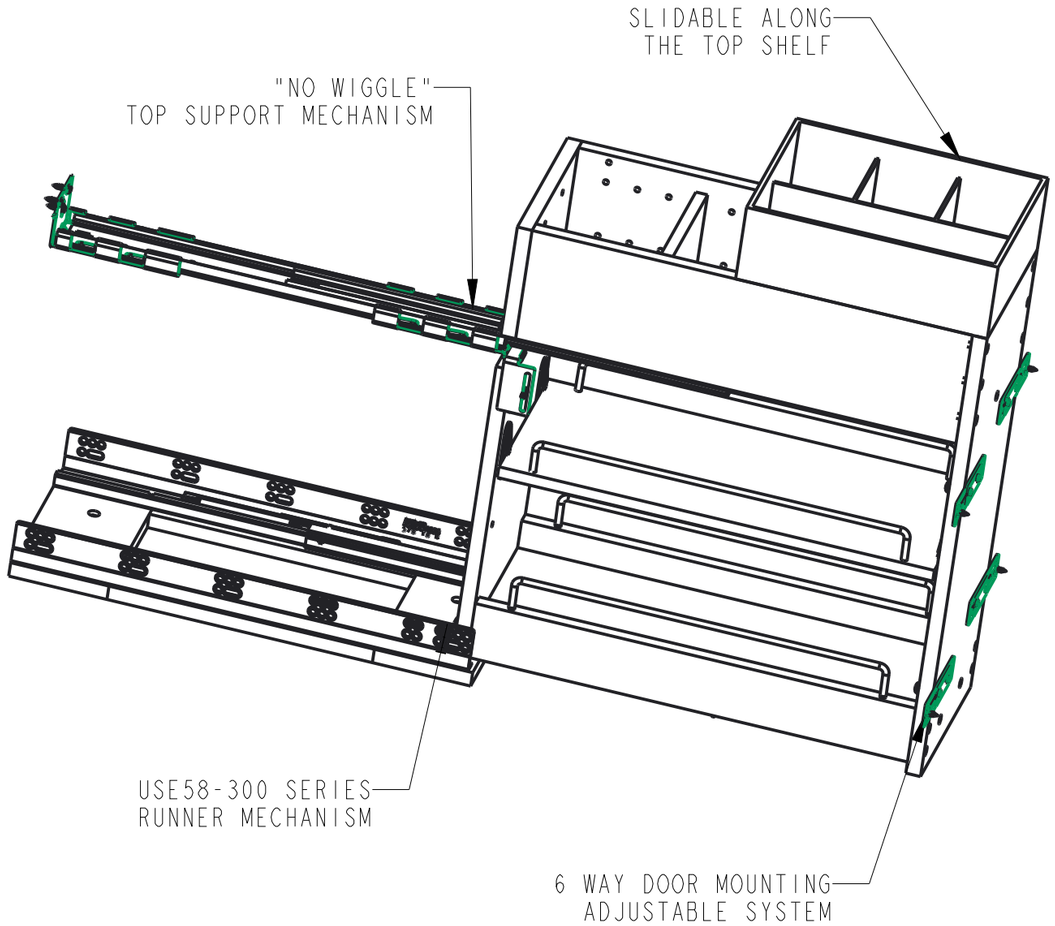

DRAWING NUMBER		REV
VBPO-T01		A
SIZE	SCALE	SHEET
A3	1:192	2 / 2
DOCUMENT STATUS	Released	