ASSEMBLY INSTRUCTION

BASE MICROWAVE CABINET

Estimated Assembly Time: 30 - 40 minutes
2-person assembly recommended

It may be necessary to use a circular saw or jigsaw for further woodcraft adjustments.

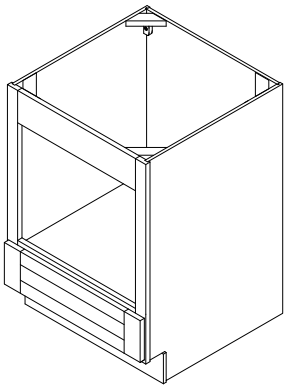

TOOLS REQUIRED

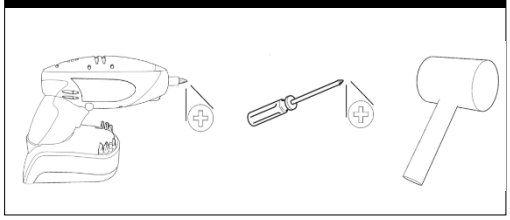

PART	DESCRIPTION	QTY	PART	DESCRIPTION	QTY
A1	Box side panel - left	1	F	Drawer face panel	1
A2	Box side panel - right	1	G1	Drawer side panel - left	1
B	Box bottom panel	1	G2	Drawer side panel - right	1
C	Box back panel	1	H	Drawer bottom panel	1
D	Face frame	1	I	Drawer back panel	1
E	Toe kick panel	1	U	Fixed shelf	1

HARDWARE CONTENTS

AA1 21″ Glide and runner profile x 2

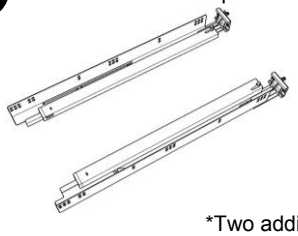

Included:
5/8” Flat Head Phillips Screw x 10

*Two additional pieces are included as an extra

BB Counter corner block x 4

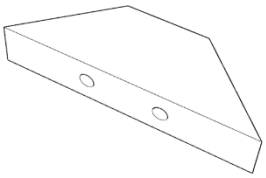

CC Adjustable drawer clip x 2

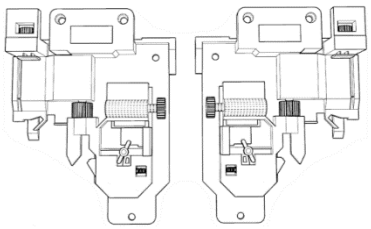

Included:
5/8” Flat Head Phillips Screw x 4

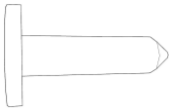

3/8” Flat Head Phillips Screw x 4

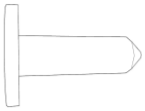

DD Rubber bumper x 4

FF 1” Flat head phillips screw x 16

1

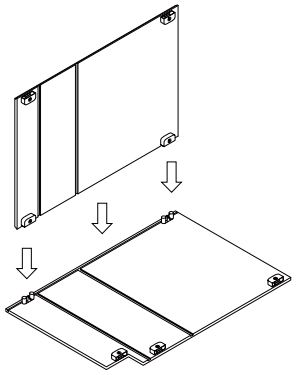

2

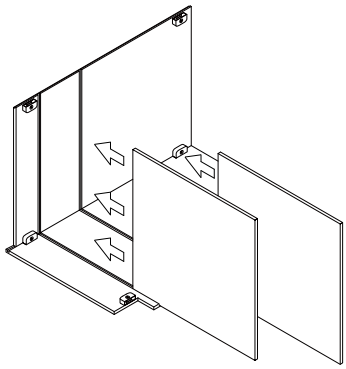

3

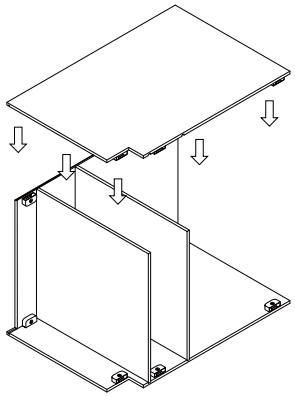

4

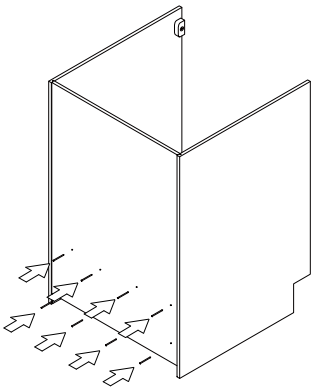

5

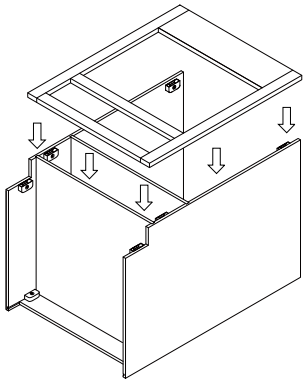

6

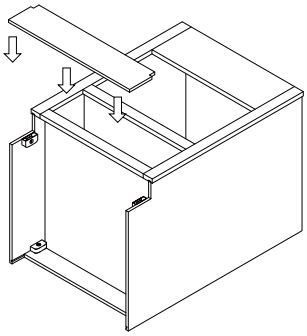

7

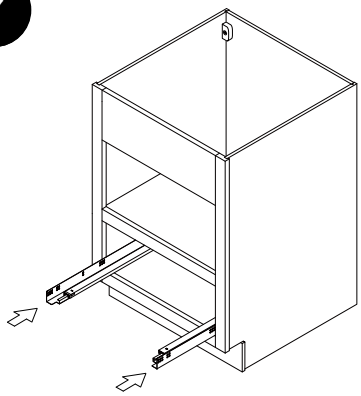

8

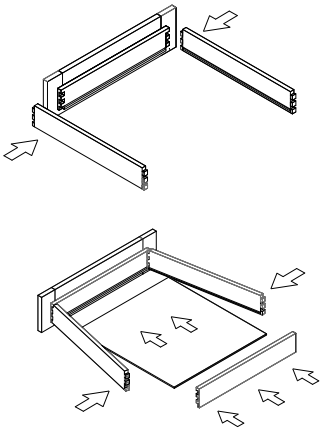

9

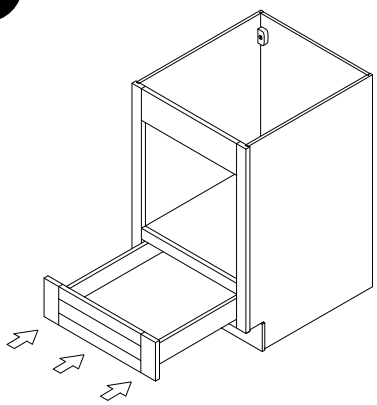

10

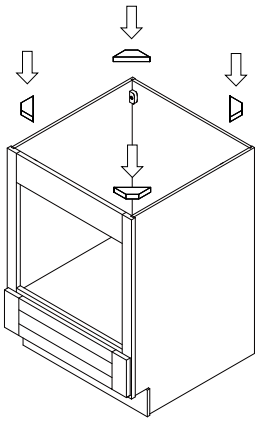

11

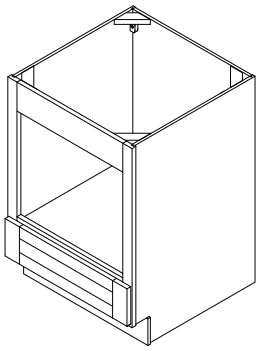

CAMLOCK CONNECTION

1. Insert the camlock to the locker.

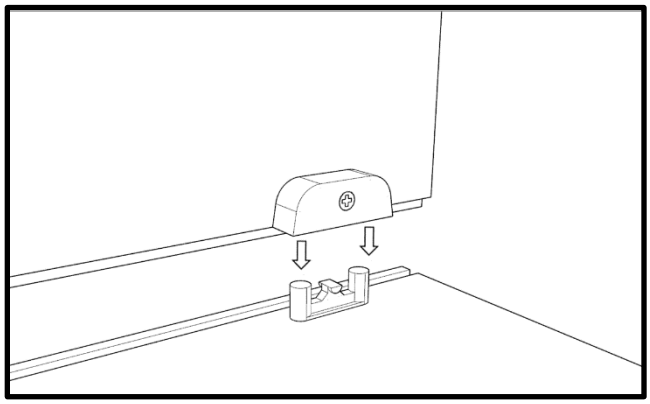

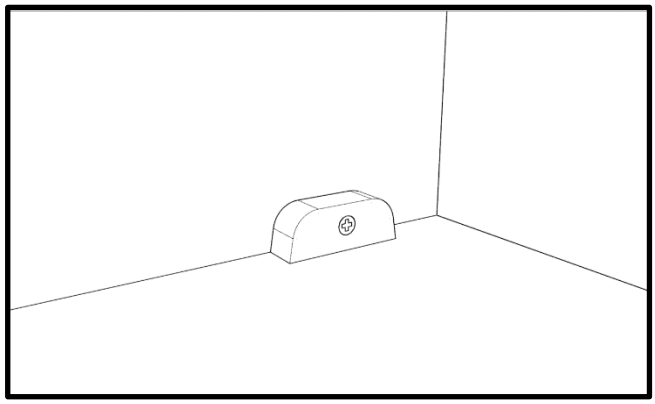

2. Turn the nut clockwise to latch two parts.

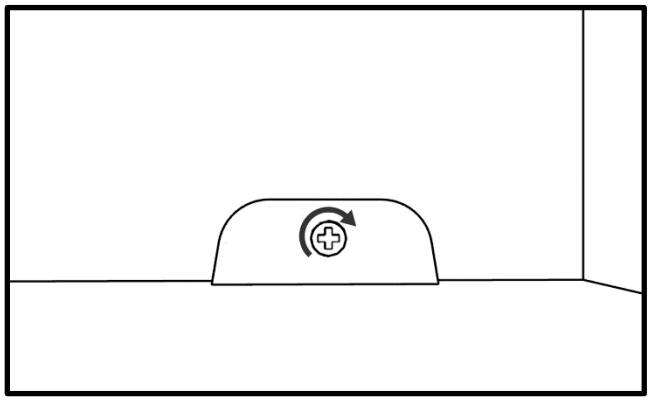

DOVETAIL DRAWER ASSEMBLY

1. Assemble the left dovetail drawer side panel with the drawer front panel. The left side panel should not be pressed all the way to tighten the drawer front panel. It is recommended to use a rubber mallet.

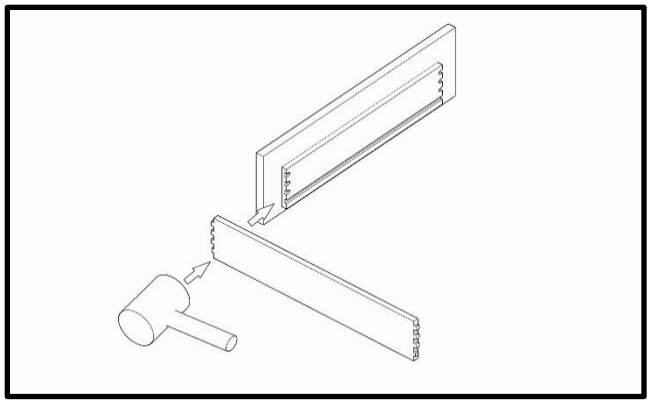

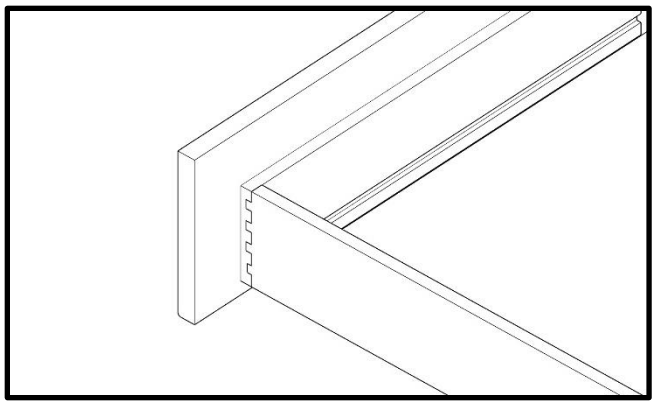

2. Assemble the right dovetail drawer side panel with the drawer front panel. The right side panel should not be pressed all the way to tighten the drawer front panel. It is recommended to use a rubber mallet.

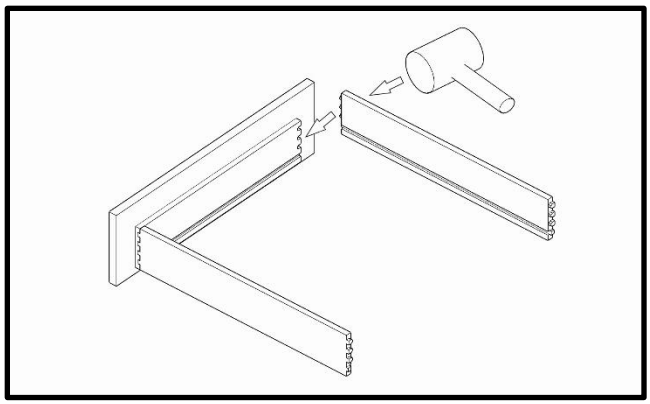

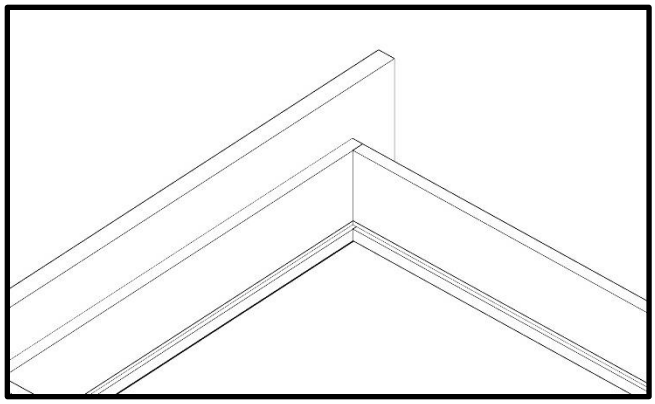

3. Tilt the side panels slightly outside and insert the drawer bottom panel and the drawer back panel. Firmly assemble the drawer using a rubber mallet.

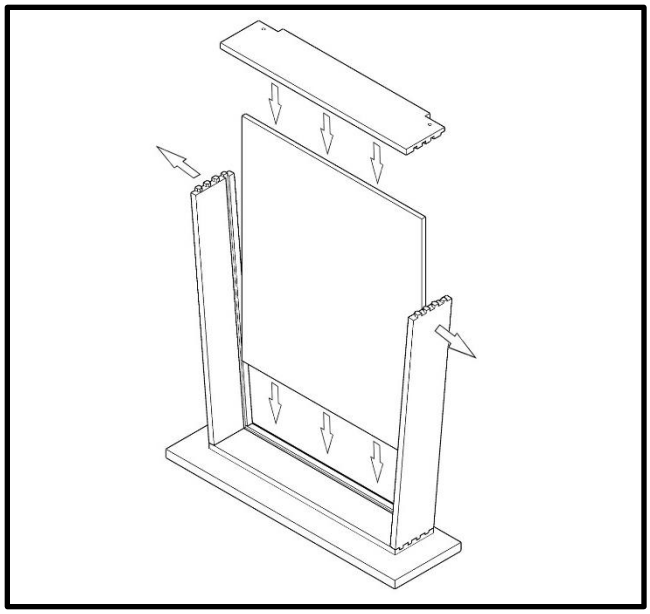

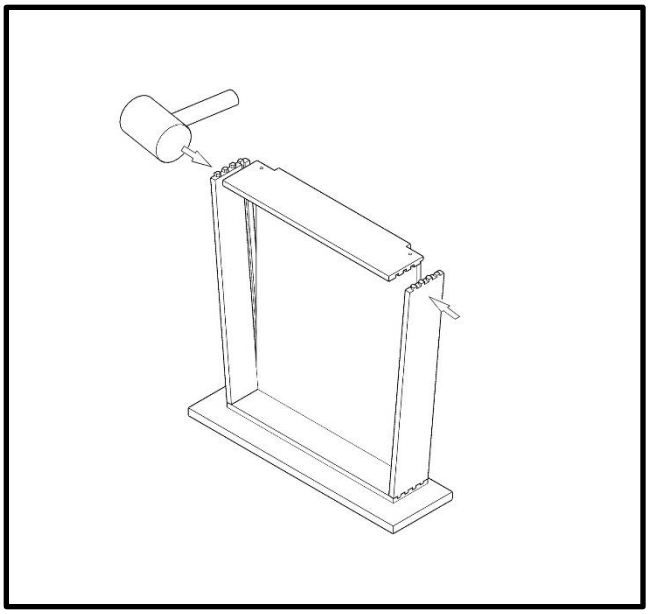

DRAWER CLIPS INSTALLATION

1. Drill two 5/8” flat head Phillips screws with each drawer clip into the drawer front panel.

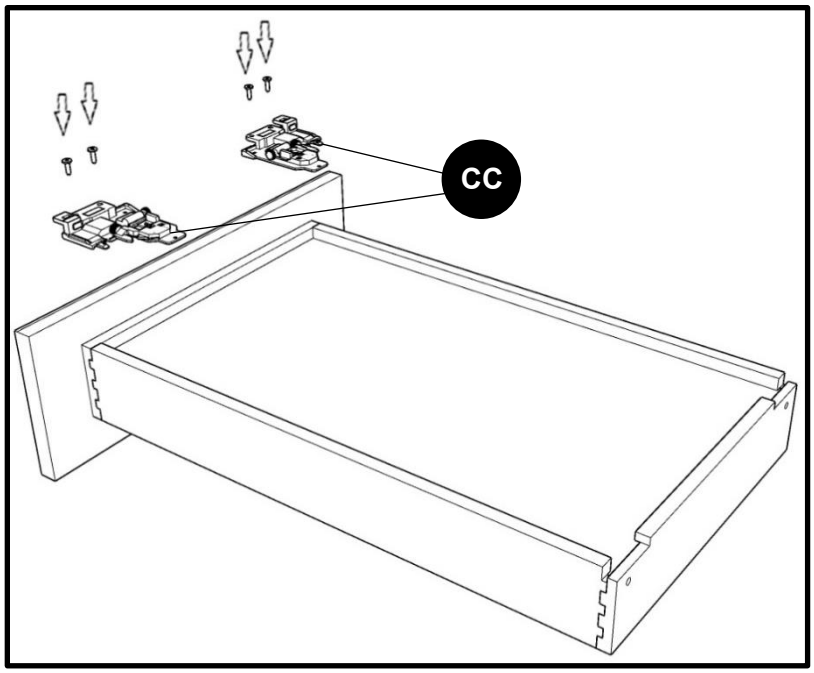

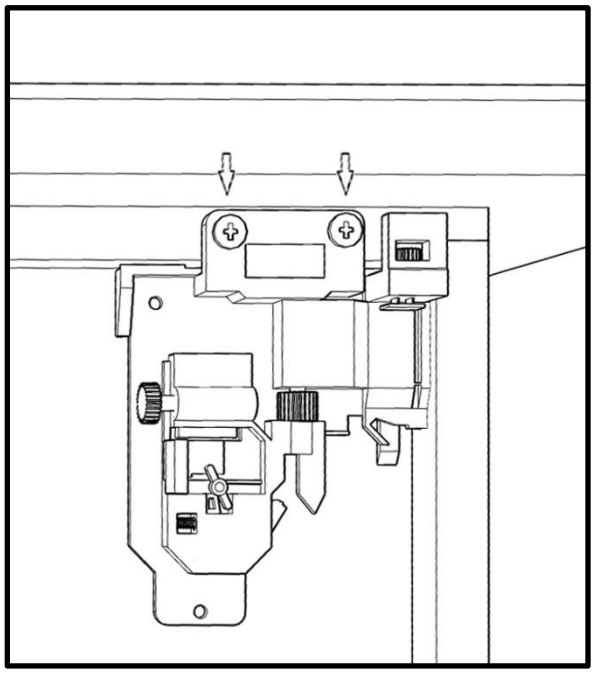

2. Drill two 3/8” flat head Phillips screws to each drawer clip to the drawer box bottom panel.

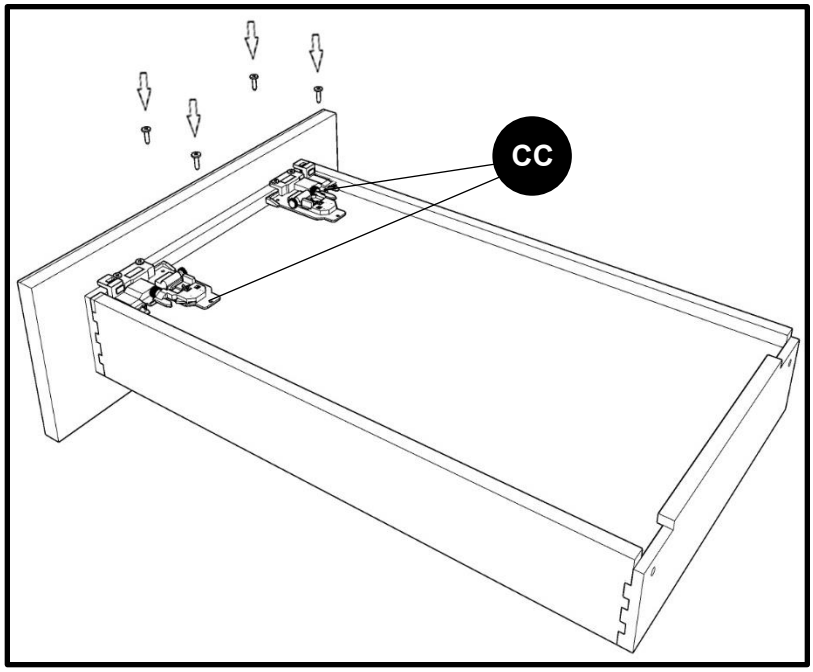

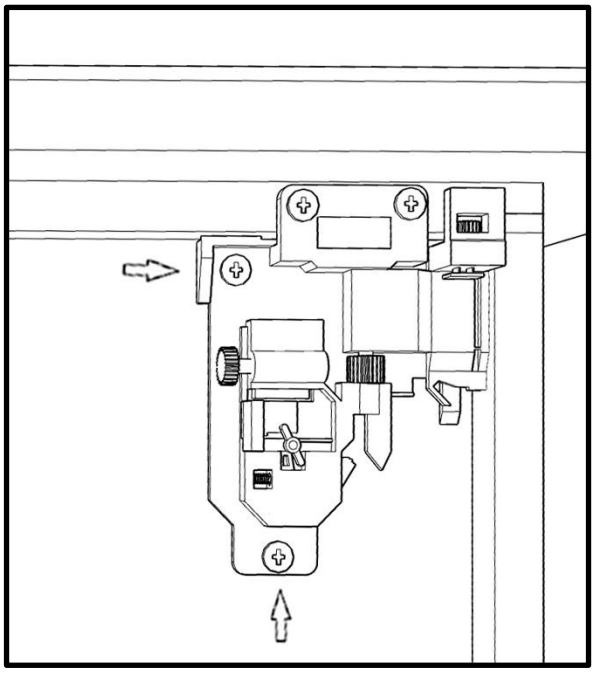

GLIDE AND RUNNER PROFILE INSTALLATION

1. Insert the glide bases into the predrilled holes on the cabinet box back panel, and drill two 5/8” flat head Phillips screws for each glide base to tighten the base to the box back panel. It is recommended to keep the adjustable bracket in the middle of the base during construction. Once the drawer has been installed and pushed into place, the adjustable bracket will automatically adjust to the correct position.

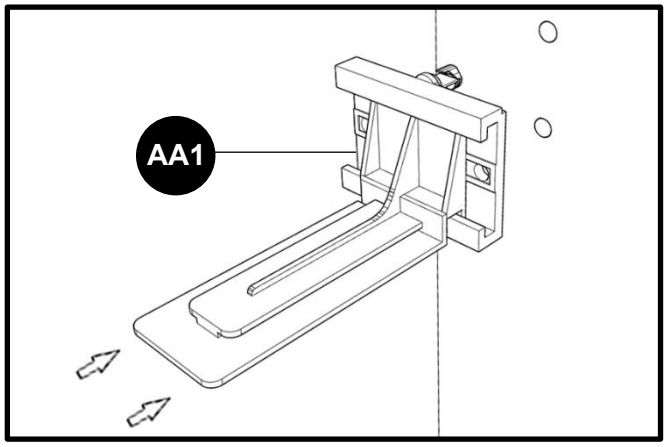

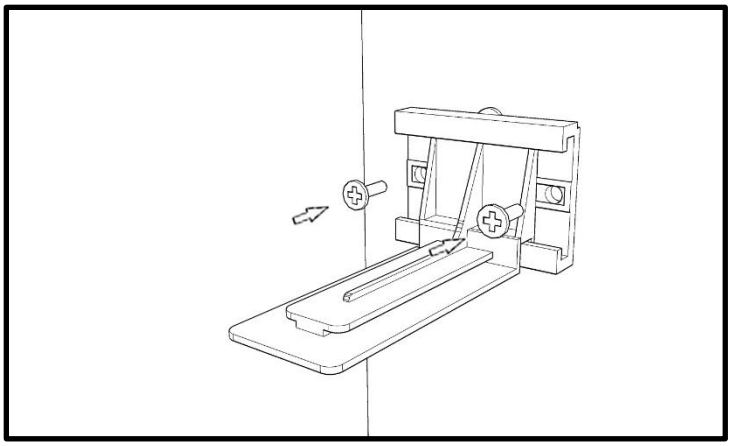

2. Connect the glide and runner profiles to each of the glide bases. Pull the glide out slightly to make the other side stay on the middle rail of the cabinet face frame.

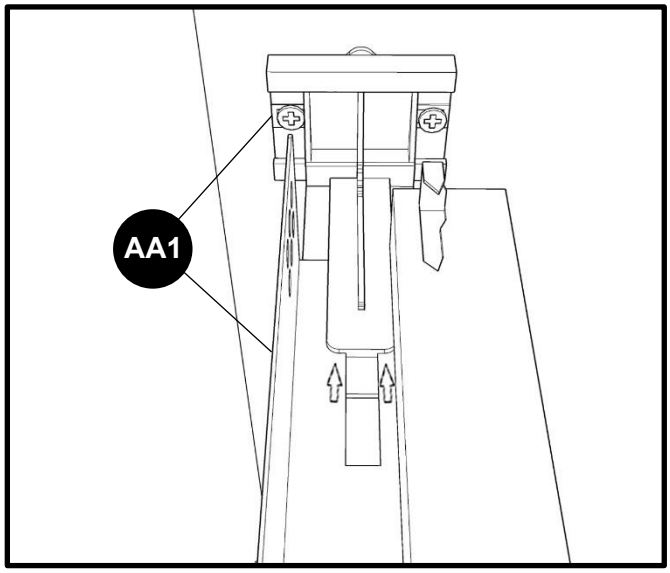

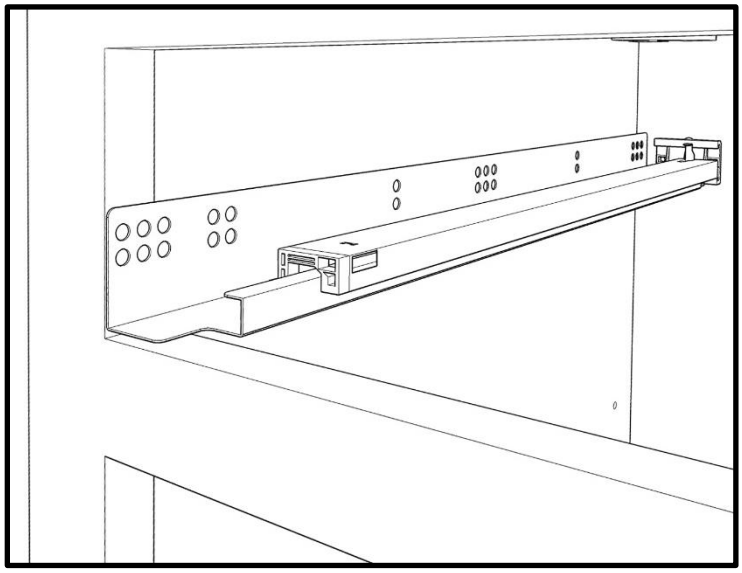

3. Drill two 5/8” flat head Phillips screws on each side of the cabinet face frame, not on the side panels. These screws will tighten the glides and runners to the cabinet face frame. Only the first two holes should be used as illustrated in the picture below.

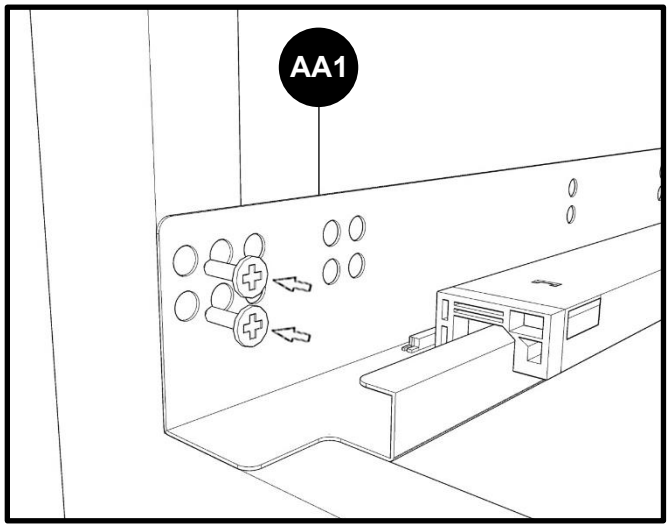

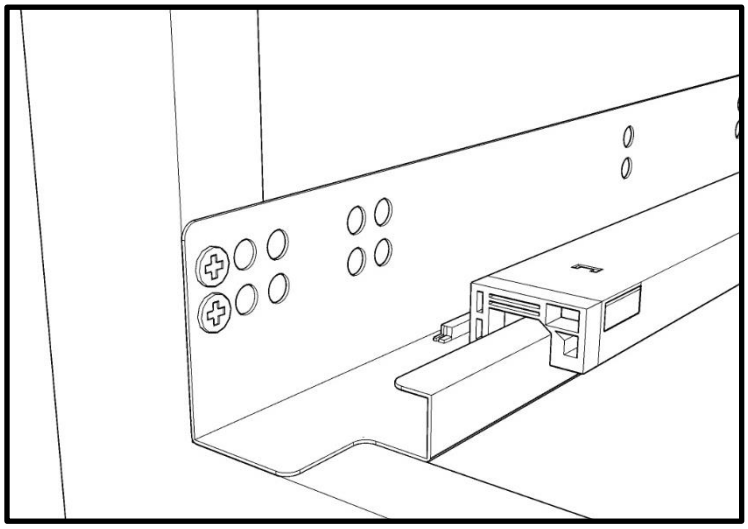

DRAWER ADJUSTABILITY GUIDE

1. Insert the drawer on the extended runner. To secure the drawer clips with the runner, push the drawer in. Upon successful locking, a click can be heard.

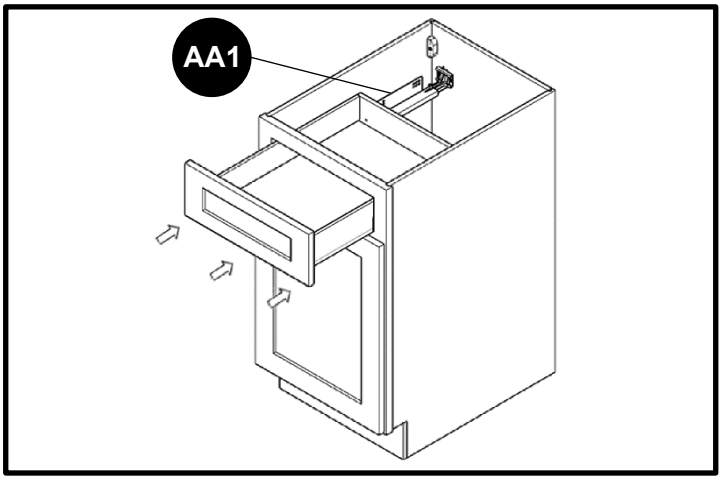

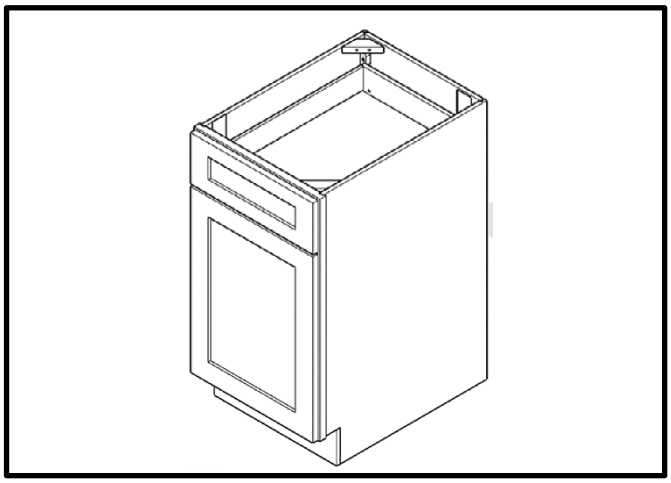

2. Insert the drawer into the extended runner. To secure the drawer clips to the runner, push the drawer in. Upon successful locking, a click can be heard. Ensure that the hook on each runner profile fits into the corresponding holes on the drawer back panel.

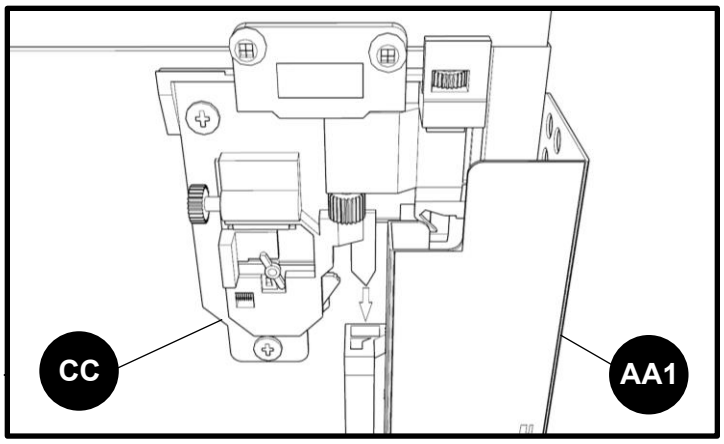

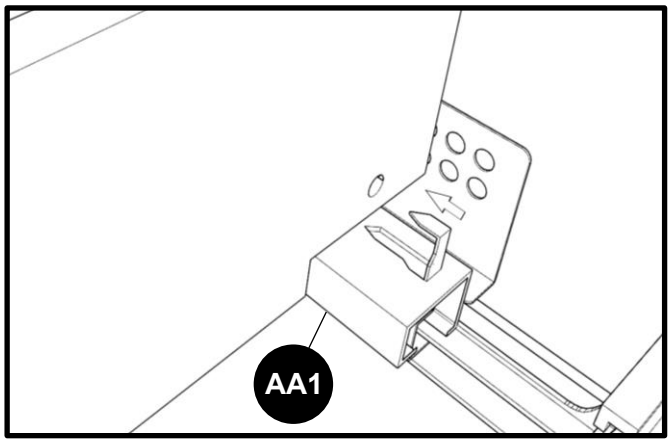

3a. For leveling the drawer, the green spur gear 1 should be used to adjust it left and right, the green spur gear 2 for raising and lowering, and the green spur gear 3 for adjusting it inside and out.

3b. To take the drawer out, push the green clips at the same time to unlock drawer clips.

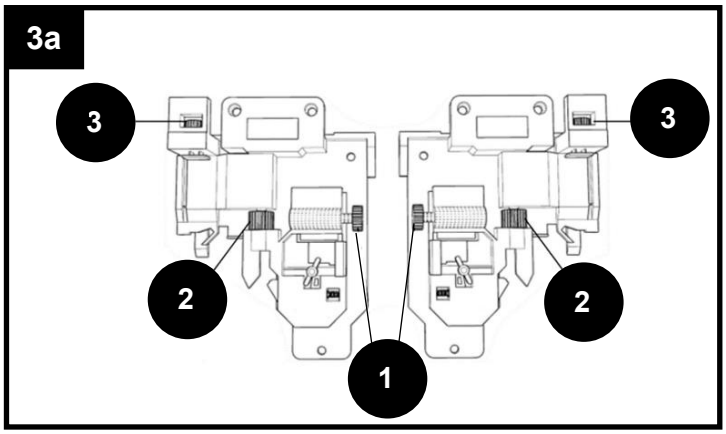

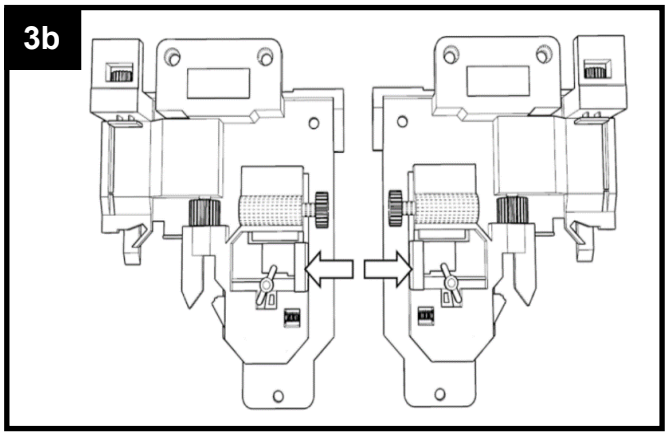

COUNTER CORNER BLOCK INSTALLATION

1. Place one counter corner block at the corner, align it with cabinet box panel. Hold it and use two 1” flat head Phillips screw to install the counter corner block. The use of a screwdriver is recommended.

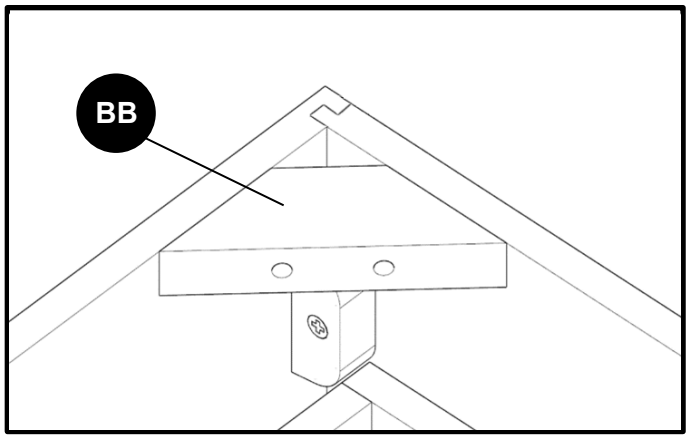

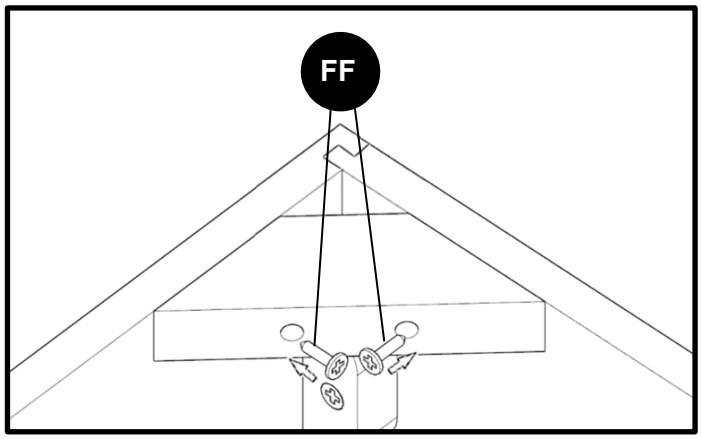

2. Install the other counter corner blocks in the same way.

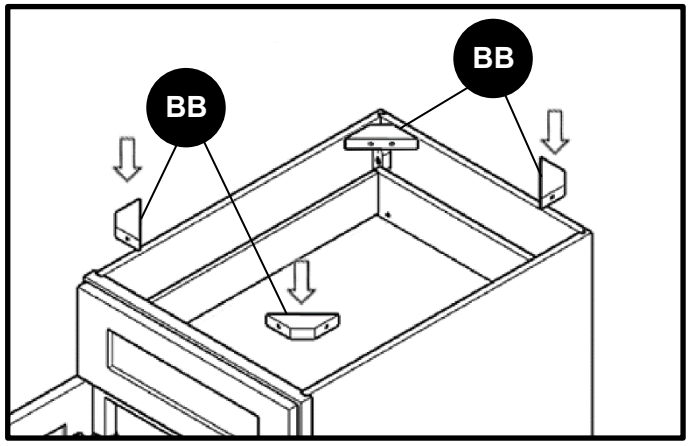

FASTEN BOX BOTTOM PANEL AND BOX BACK PANEL

1. Drill 1” flat head Phillips screw to the predrilled holes and fasten box bottom panel with box back panel

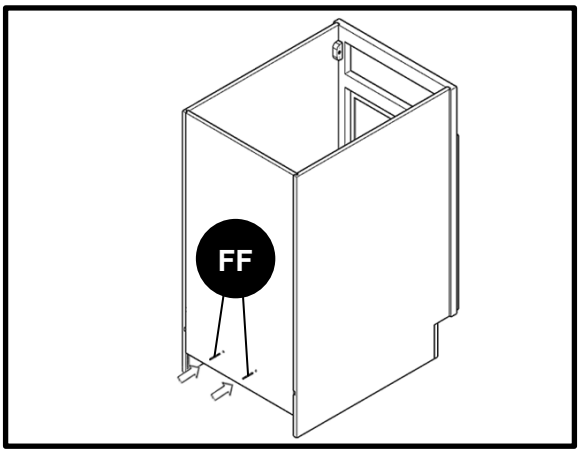

RUBBER BUMPER INSTALLATION

1. Attach rubber bumpers to 4 corners of each drawer face panel and 2 outsider corners of each door panel.

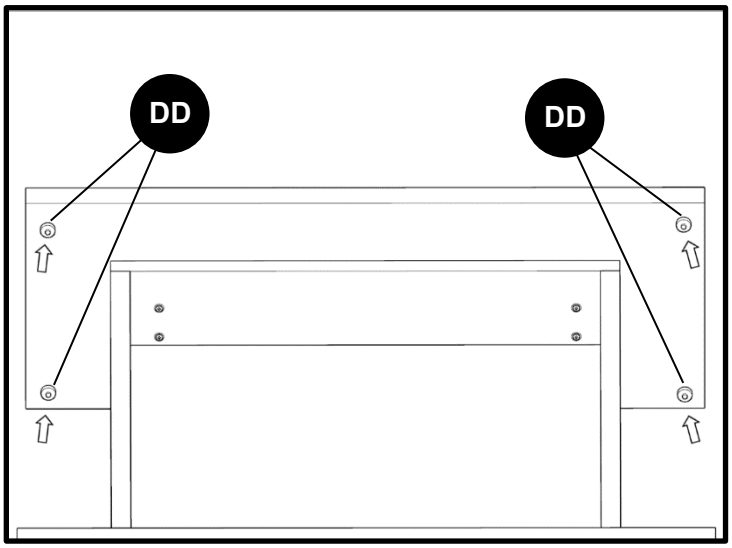

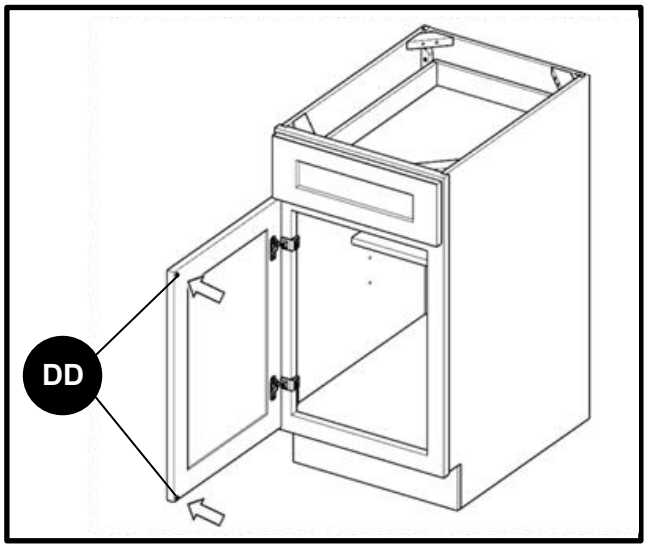

BASE MICROWAVE CABINET OPENING ADJUSTMENT
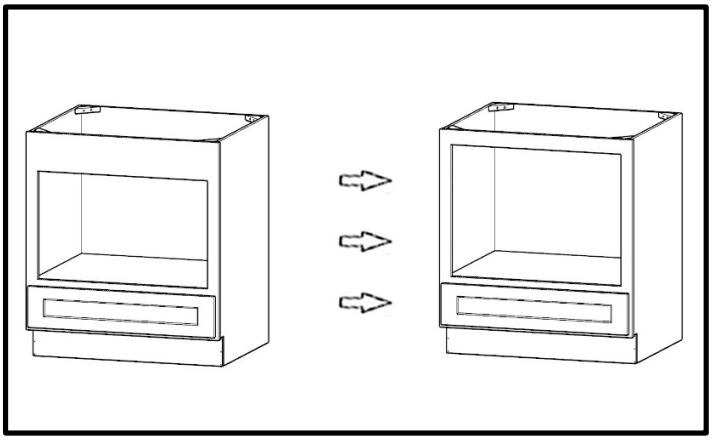
1. The BMW30's original opening is 26-1/2 in width x 16-1/2 in height x 23 in depth. The opening height can be trimmed up to 20-1/8 in with a jigsaw or circular saw (SAFETY WARNING) to accommodate your microwave.