Murphy bed

Assembly Instructions - Please keep for future reference

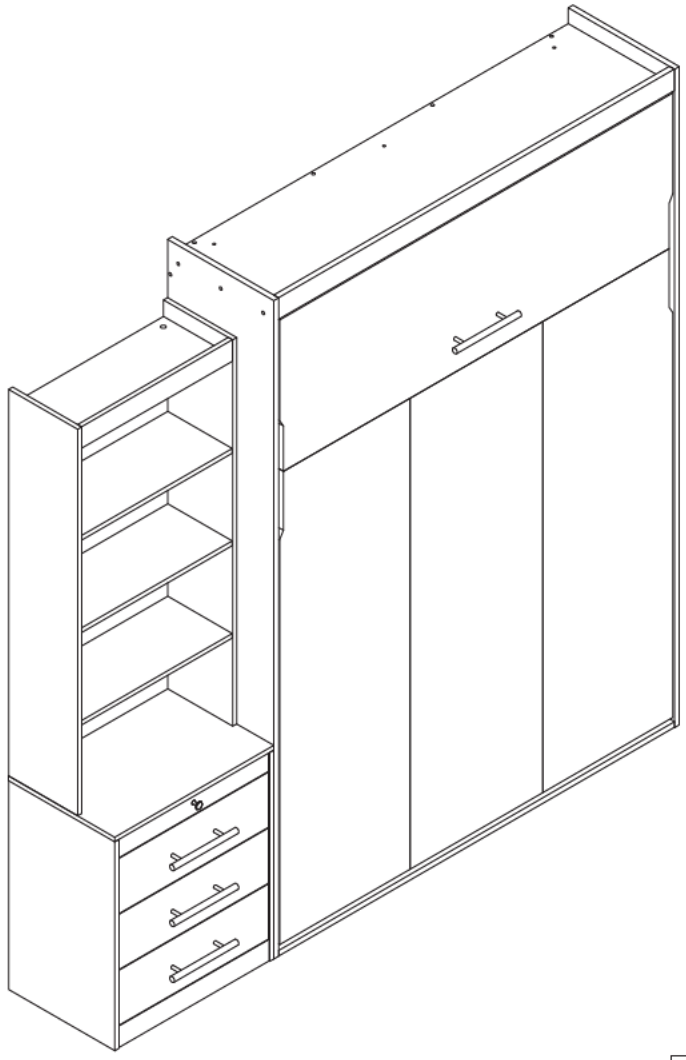



Three people are required to assemble and move this model.

Dimensions
Width-83.7inch Depth-15.75inch Height-84.45inch

Full size mattress requestment

1. Maximum thickness of mattress:7.9in (20cm)
2. Weight of mattress: 74lbs (33kg)—88lbs (40kg)

Important – Please read these instructions fully before starting assembly

Assembly Instructions

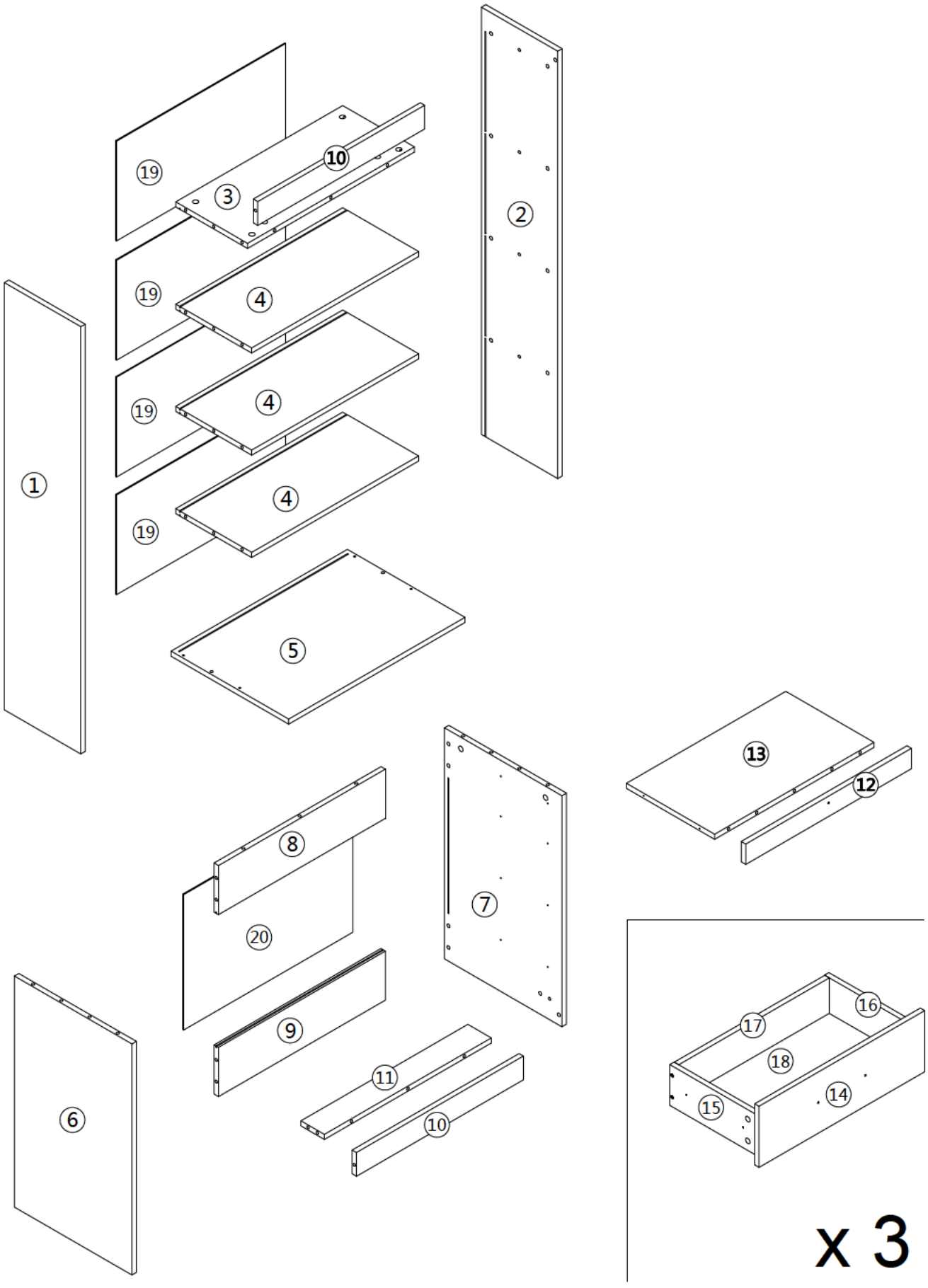

Assembly Instructions

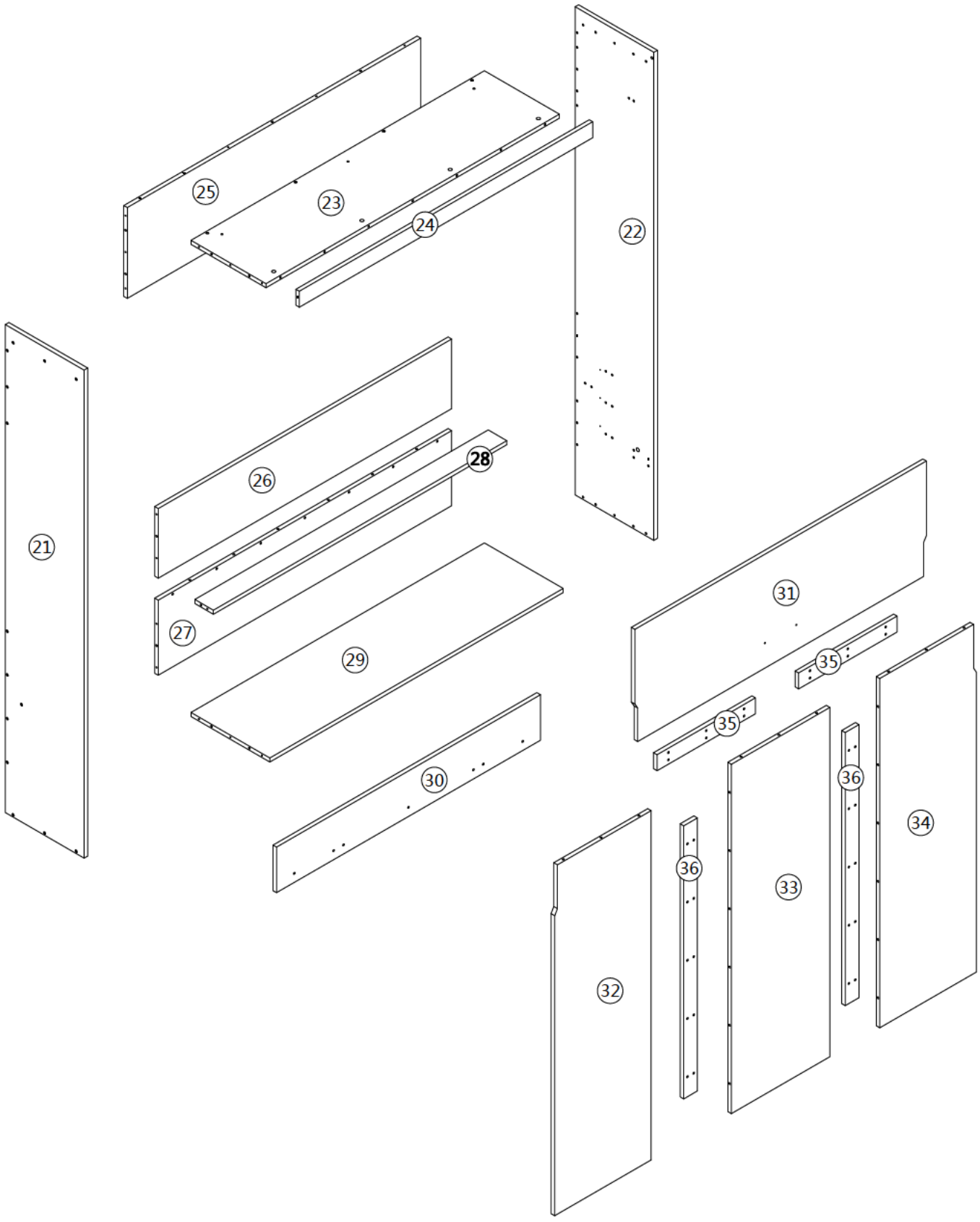

Part List

Hardware list ： W650111478

21 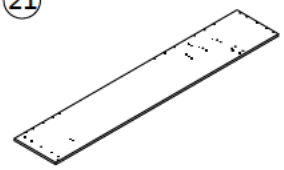 1 PC	22 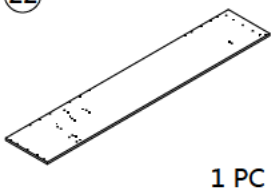 1 PC			

Part List

Hardware list ： W650111479

30 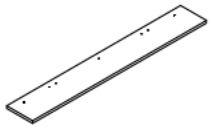 1 PC	31 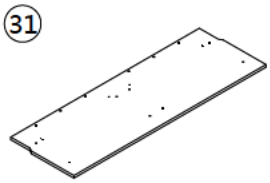 1 PC	32 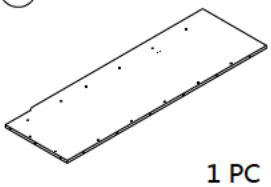 1 PC	33 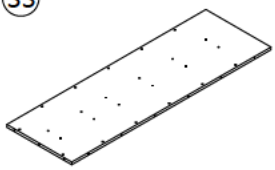 1 PC	34 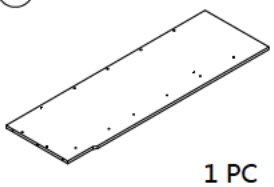 1 PC
35 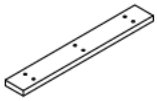 2 PCS	36 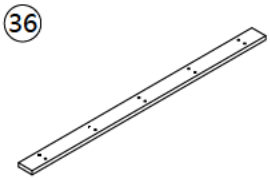 2 PCS			

Part List

Hardware list ： W650111480

1 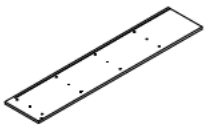 1 PC	2 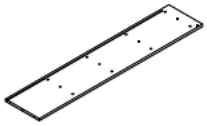 1 PC	23 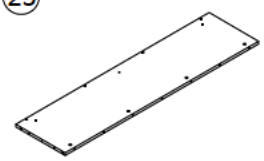 1 PC	24  1 PC	25 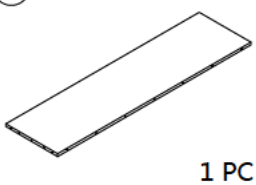 1 PC
26  1 PC	27  1 PC	28  1 PC	29  1 PC	

Part List

Hardware list ： W650111481

③ 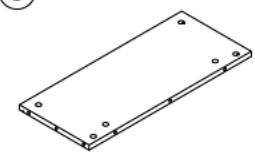 1 PC	④ 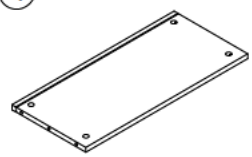 3 PCS	⑤ 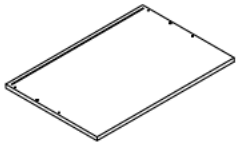 1 PC	⑥ 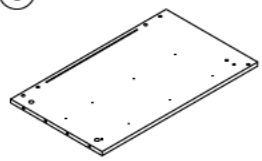 1 PC	⑦ 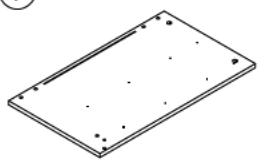 1 PC
⑧ 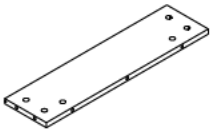 1 PC	⑨  1 PC	⑩ 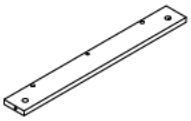 2 PCS	⑪ 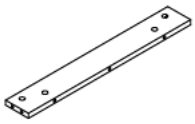 1 PC	⑫ 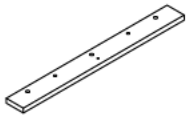 1 PC
⑬ 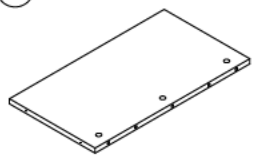 1 PC	⑭ 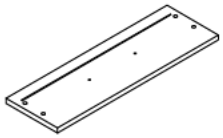 3 PCS	⑮ 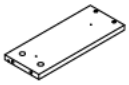 3 PCS	⑯ 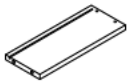 3 PCS	⑰ 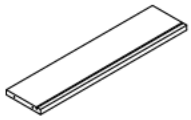 3 PCS
⑱ 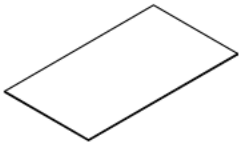 3 PCS	⑲ 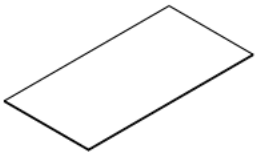 4 PCS	⑳ 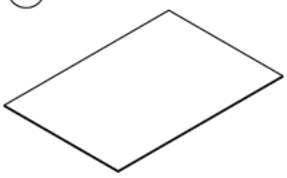 1 PC		

Using Camlocks

Step 1

Connect the male camlock as diected in the assembly instructions using a scewdriver.

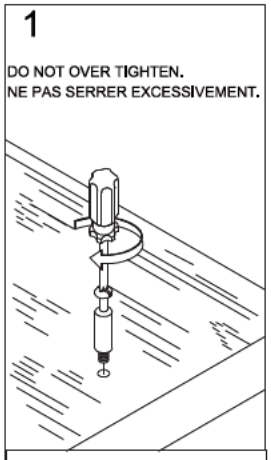

Step 2

Push the male camlock into the entry hole.

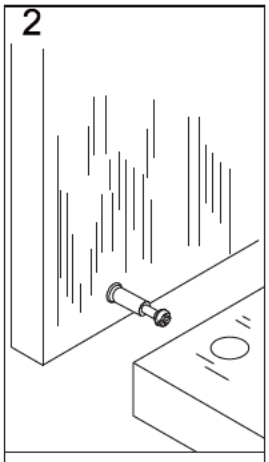

Step 3

Insert the femle camlock as shown in the instruction.

Note：ensure that the arrow on the top of the camlock points towards the entry hole for the male camlock.

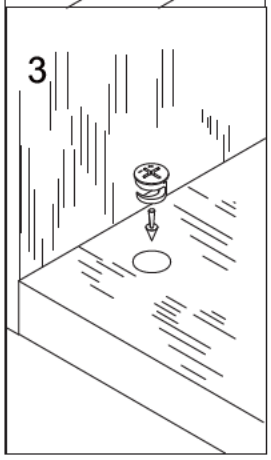

Step 4

Turn the female camlock clockwise with a screwdriver.

You should feel a click when the camlock is locked in place.

The joint is now secure.

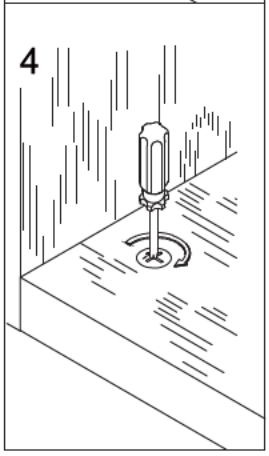

Important information to read before starting the assembly. Keep this information for future reference.

IMPORTANT WARNINGS

Risk of serious injuries if the wall bed tips over.
To prevent wall bed from tipping over, mount it permanently to the wall.
Only a qualified person* must carry out the installation and any possible adjustment of the wall bed (including disassembly). If the wall bed is not firmly mounted (anchored) to the wall, it might tip over and cause serious injuries to the installer, users of the bed as well as the people near the bed.
The choice of wall anchoring depends on the type of wall. Use wall anchors suitable for the wall material.

* Qualified person: it is necessary to have a good understanding of the wall structure where the bed is anchored, including the positioning of the wall studs and structural components in the case of a wood or metal structure. If you do not have the necessary skills, make sure that the installation is done by someone who has the qualifications and required knowledge. When you choose the installer, make sure to comply with all applicable regulations in the province, state or country where the furniture is installed.

IMPORTANT: BEFORE STARTING ASSEMBLY

Be sure to confirm the following information:

1. **The installer has the qualifications * and required knowledge.**
2. **Only wall anchor screws for wood-frame walls are provided with this bed. See anchor requirements and installation notes provided** in the instruction manual, according to the type of wall, and use the appropriate anchors such as described in this manual.
3. Your bed can hold a maximum distributed weight of 1000 lb (455 kg), including the weight of the mattress.
4. Maximum thickness of mattress: 7.9 in (20 cm), and must stand in vertical position without sagging.
5. The bed will not stay open without the weight of the mattress which must be between: 74 lbs (33 kg) and 88 lbs (40 kg).
6. Minimum ceiling height requirements for installation: 87 in (2200mm).
7. It is recommended to assess the structural integrity of the floor and wall and to make sure that the wall anchoring devices can withstand the forces generated. More specifically, before installing the wall bed, it is necessary to verify that the floor and the wall on which you want to install the bed are flat and have no structural damage that could affect the installation of the wall bed or its anchoring to the wall. Do not install the bed on weakened or rotten structures.
8. It is necessary to ensure that wall anchors of the bed can withstand forces generated. The value of the holding power (Fh) of each anchor should be 630 Newtons (142 lbf).

If the wall bed is not installed properly, the latter might close unexpectedly or could open involuntarily.
In addition, if the wall bed is installed incorrectly, one of its structural components may break and fall off.

WALL ANCHORING REQUIREMENTS & INSTALLATION RECOMMENDATIONS

Important information to read before starting the assembly.
Keep this information for future reference.

IMPORTANT WARNINGS

Risk of serious injuries if the wall bed tips over.
To prevent wall bed from tipping over, mount it permanently to the wall.
Only a qualified person* must carry out the installation and any possible adjustment of the wall bed (including disassembly). If the wall bed is not firmly mounted (anchored) to the wall, it might tip over and cause serious injuries to the installer, users of the bed as well as the people near the bed.
The choice of wall anchoring depends on the type of wall. Use wall anchors suitable for the wall material.

* Qualified person: it is necessary to have a good understanding of the wall structure where the bed is anchored, including the positioning of the wall studs and structural components in the case of a wood or metal structure. If you do not have the necessary skills, make sure that the wall anchoring is done by someone who has the qualifications and required knowledge. When you choose the installer, make sure to comply with all applicable regulations in the province, state or country where the furniture is installed.

IMPORTANT WARNINGS

INSTALLATION AND APPROPRIATE HARDWARE

Using appropriate hardware, all the anchor screws of the wall bed must be firmly secured to the wood or metal studs, the structural components, or a masonry wall.

Only wall anchor screws for wood-frame walls are provided with this bed.

NEVER USE DRYWALL ANCHOR SCREWS OR SECURE THE BED TO DRYWALL

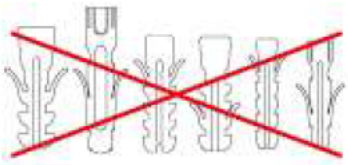

See wall anchoring requirements and installation notes provided in the instruction manual, according to the type of wall, and use the appropriate anchors such as described in this manual.

NUMBER OF SCREWS NEEDED



Two (2) screws are required for each anchor point. Three (3) wall anchor points are necessary for the proper installation of the wall bed. So you need a total of six (6) wall anchor screws.

THE SCREWS MUST BE VERY WELL ANCHORED TO THE STRUCTURAL COMPONENTS OF THE WALL.

** A CERTIFIED CONSTRUCTION PROFESSIONAL, IN COMPLIANCE WITH APPLICABLE REGULATIONS IN THE PROVINCE, STATE, OR COUNTRY WHERE THE FURNITURE IS INSTALLED.

Part List

Hardware list ： W650111478

Please check you have all the panels listed below

Note: The quantitie below are the correcet amount to complete the assembly. In some cases more fttings may be supplied than are required.

E000303 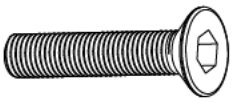 **M8 x 40MM** x 3	E000905  **M6 x 30MM** x 7	E000401  x 3
E000501 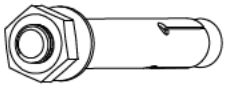 x 3	① 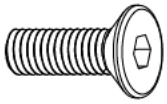 **M6 x 15MM** x 24	F000402  **ST4x15** x 8
② 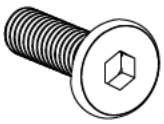 **M6 x 15MM** x 22	③ 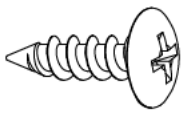 **ST4x15** x 6	E000904  **M6 x 40MM** x 48
⑤ 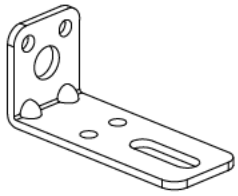 x 3	⑥ 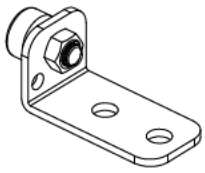 x 2	⑦  x 2
⑧  x 2	⑨ 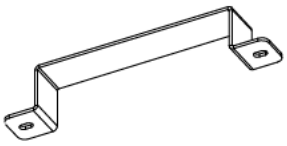 x 1	⑩ 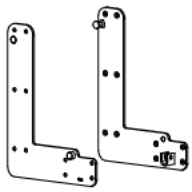 x 1
⑪  x 1	⑫  x 1	⑬ 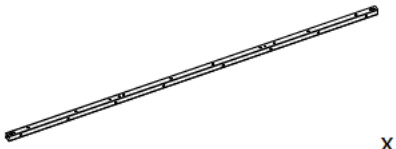 x 2
⑭ 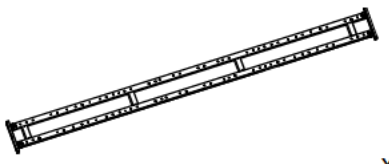 x 1	⑮  x 26	⑯ 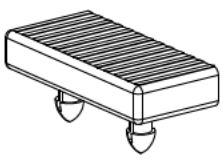 x 52
⑰ 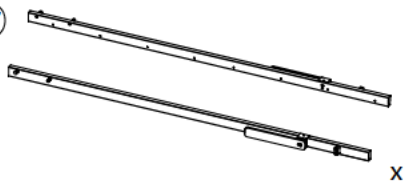 x 1	⑱ 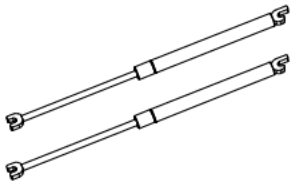 x 1	⑲ 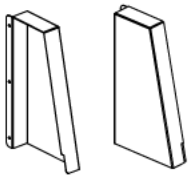 x 1

Part List

Hardware list :

Please check you have all the panels listed below

Note: The quantitie below are the correcet amount to complete the assembly. In some cases more fttings may be supplied than are required.

A 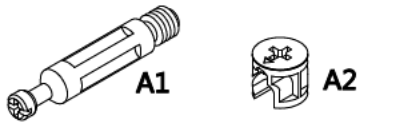 x 61	B 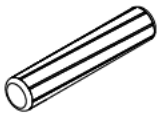 **8 x 40MM** x 75	C 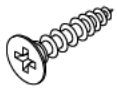 **3.5 x 14MM** x 52
D 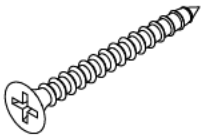 **3.5 x 35MM** x 12	E 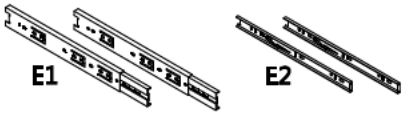 **300MM** x 4	F 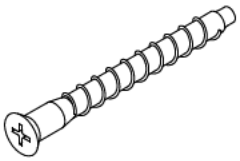 **7 x 50MM** x 40
G 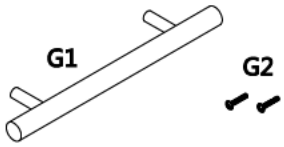 x 4	H  x 1	J  x 20
K  **M6 x 30MM** x 32	L  x 36	

Tools required

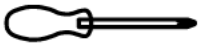



Phillips screwdriver
(medium & large)

Ruler - Use this ruler to help correctly identify the screws

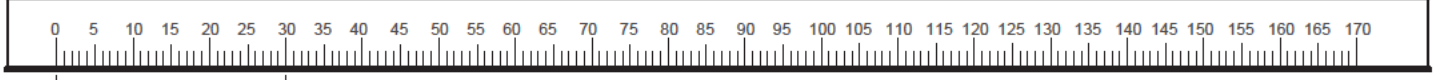

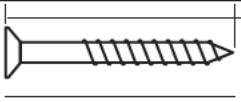

The screws length is measured from the head to the point (30mm screw shown).

Assembly Instructions

Step 1

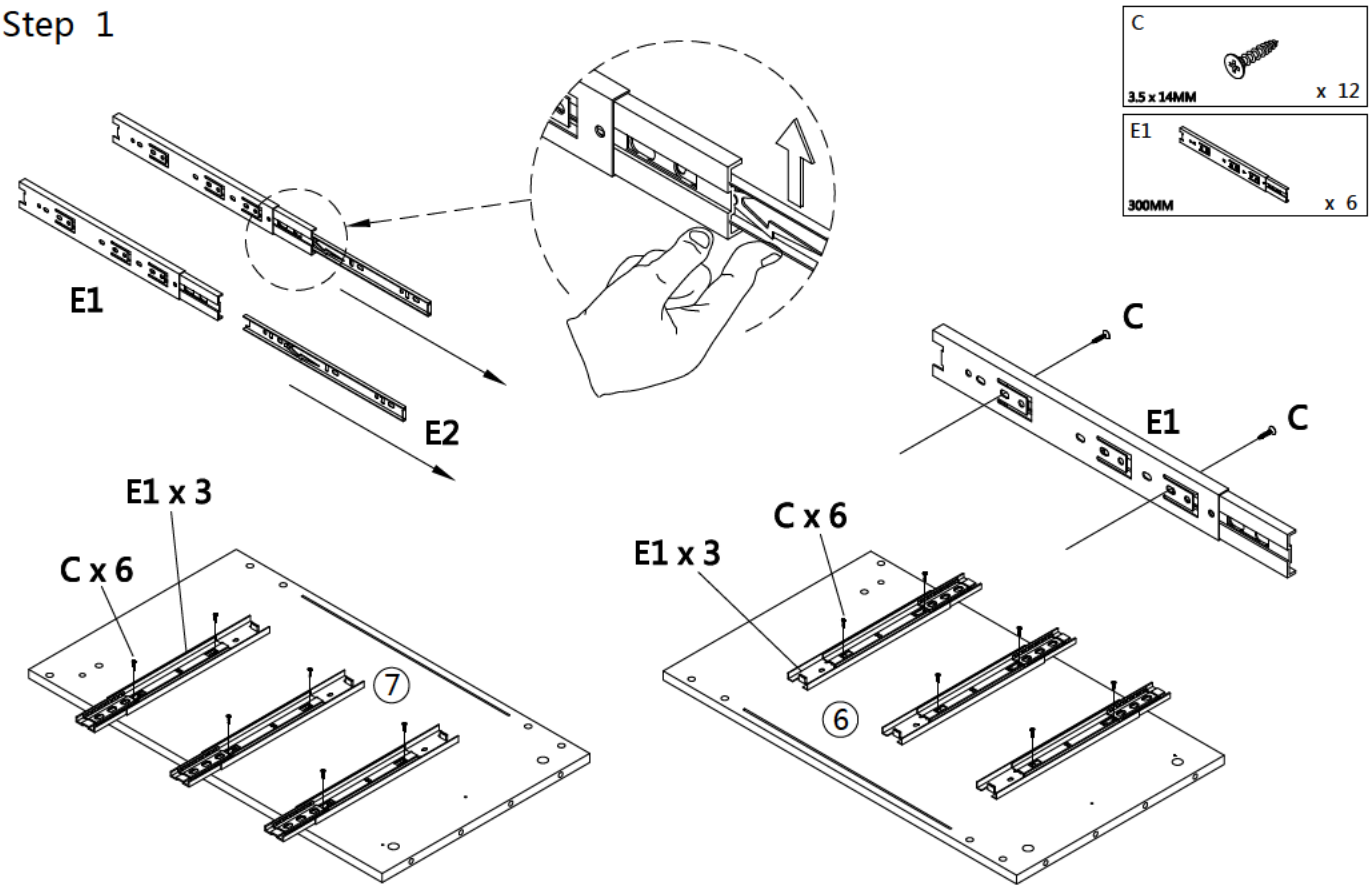

Step 2

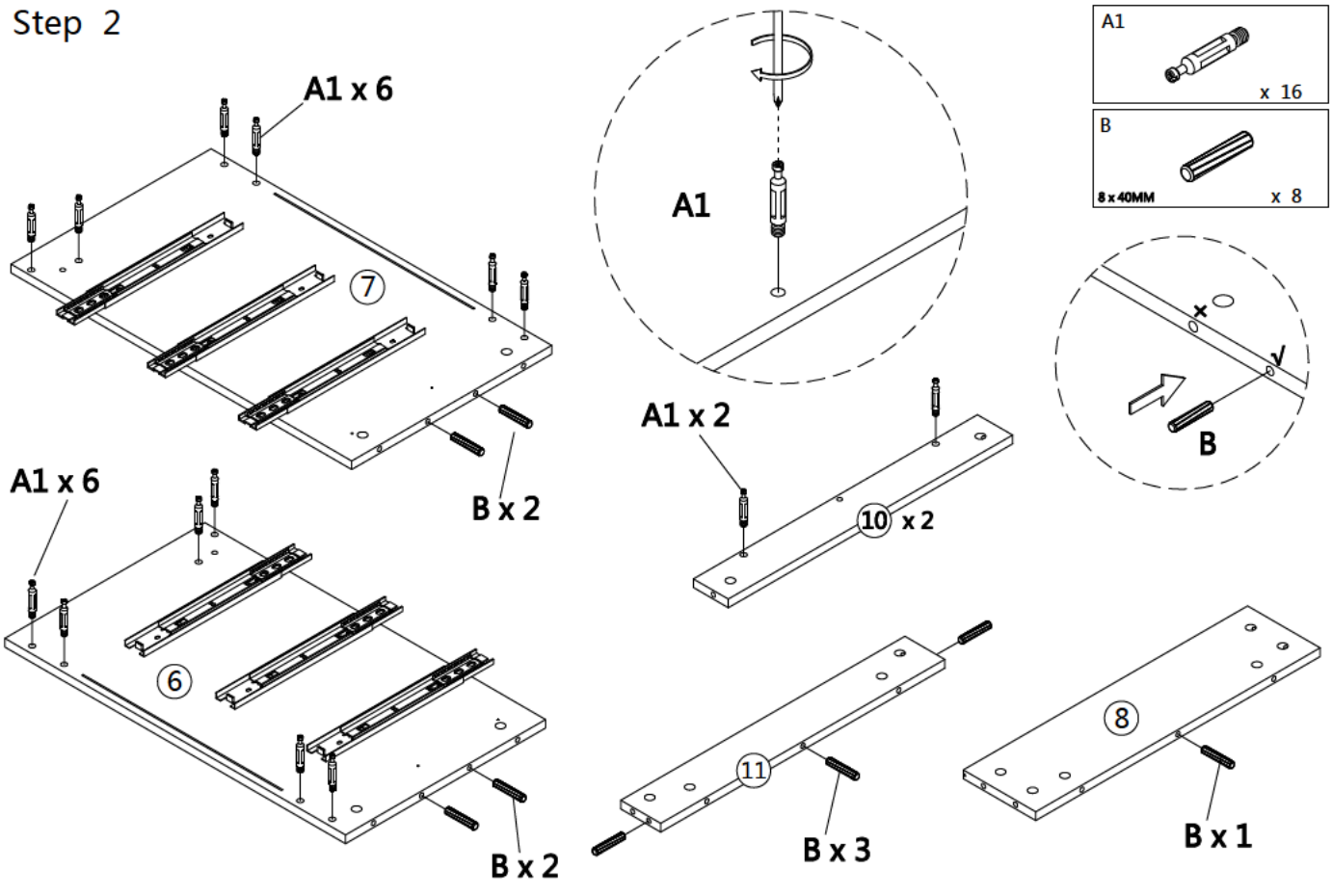

Assembly Instructions

Step 3

A2 x 8

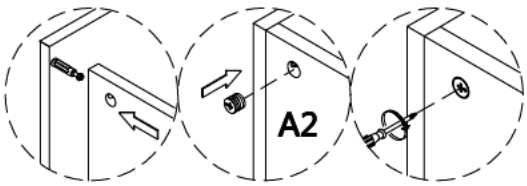

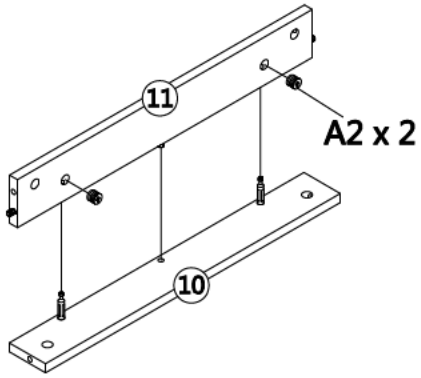

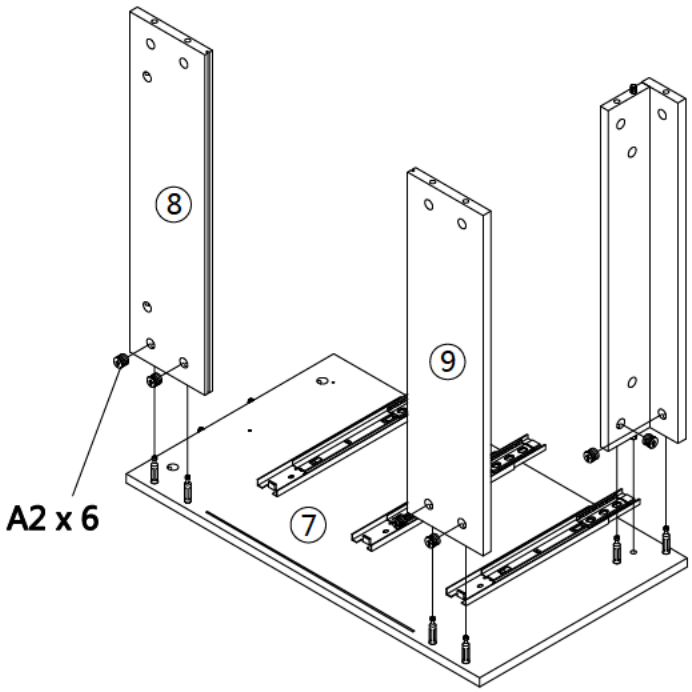

Step 4

A2 x 6

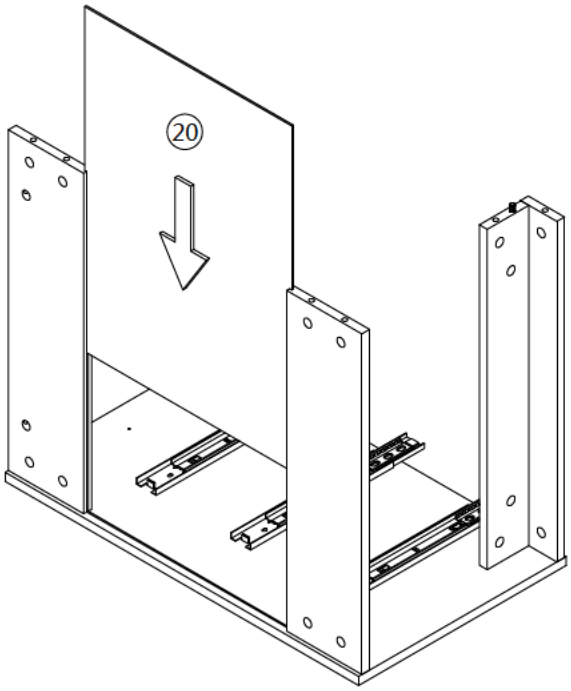

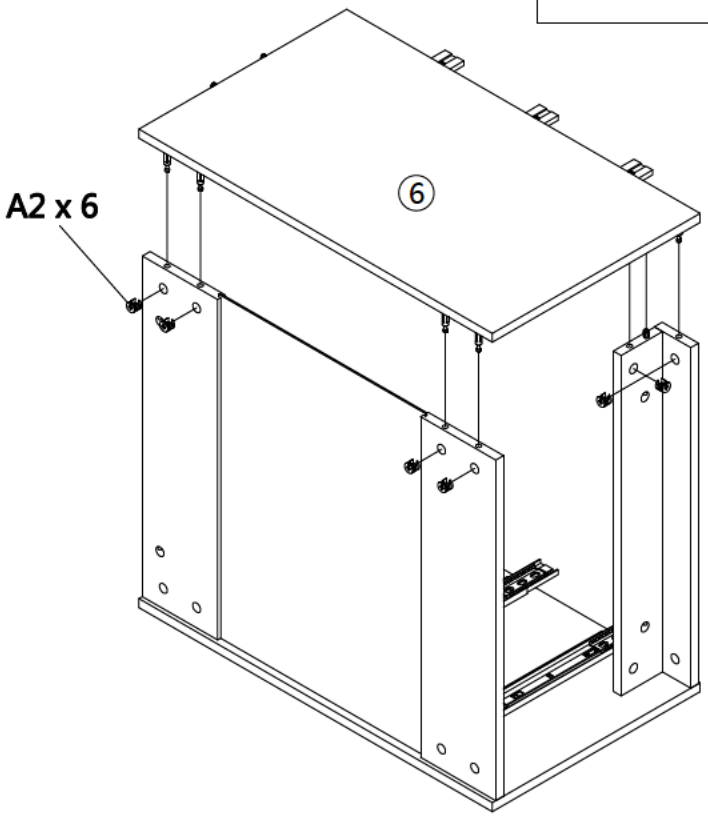

Assembly Instructions

Step 5

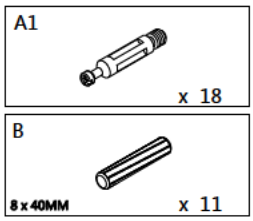

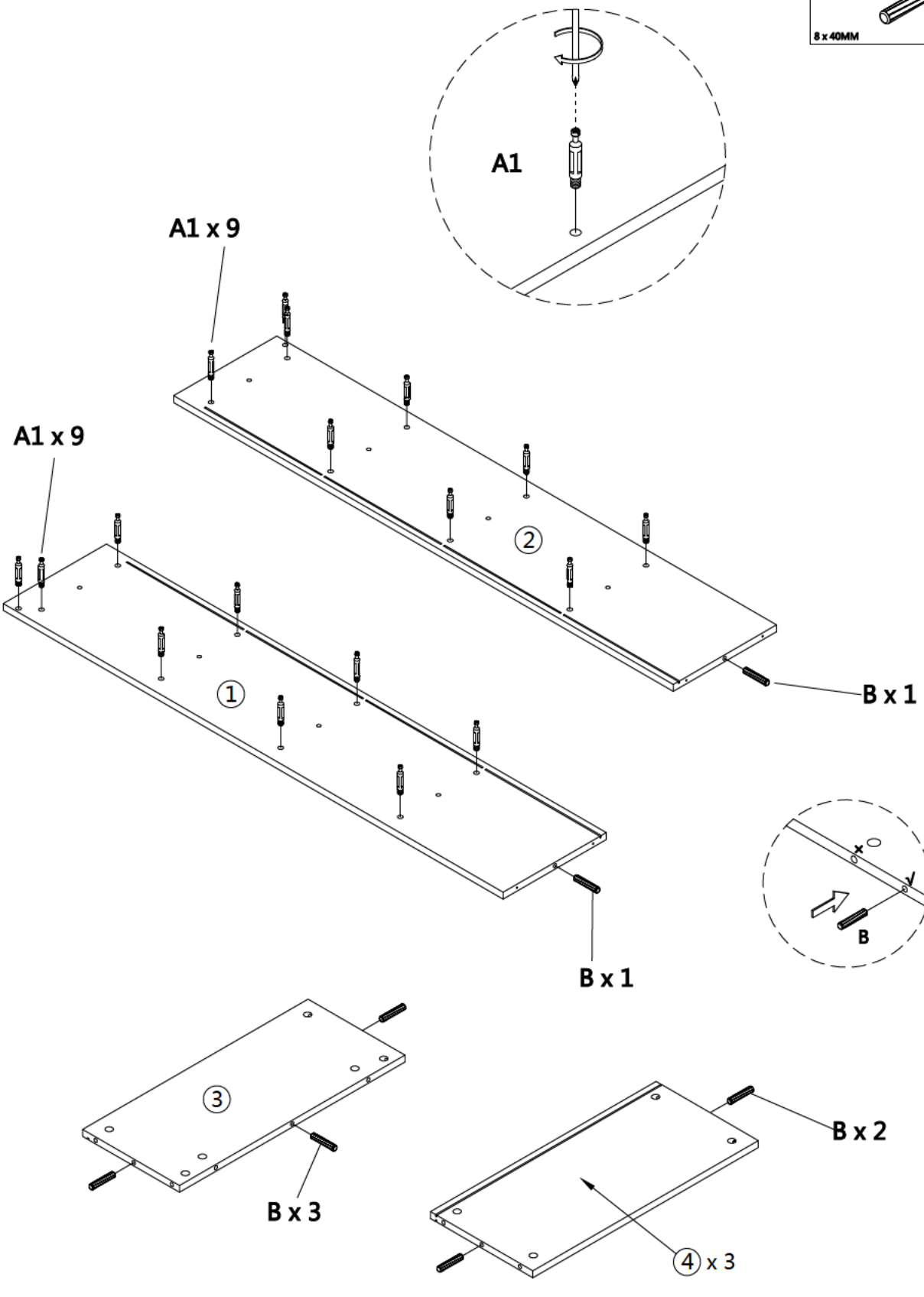

Assembly Instructions

Step 6

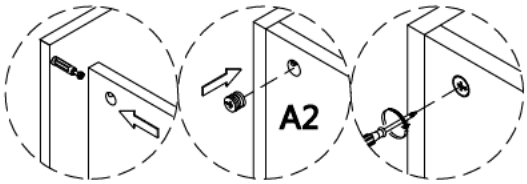

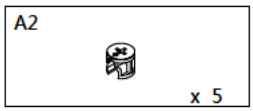

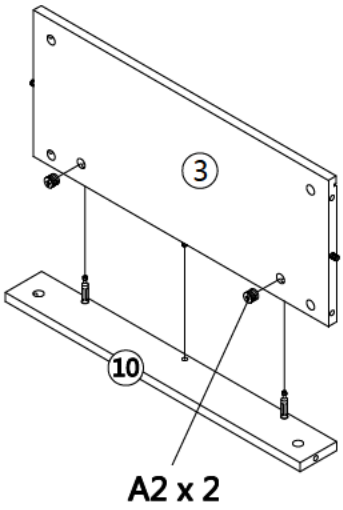

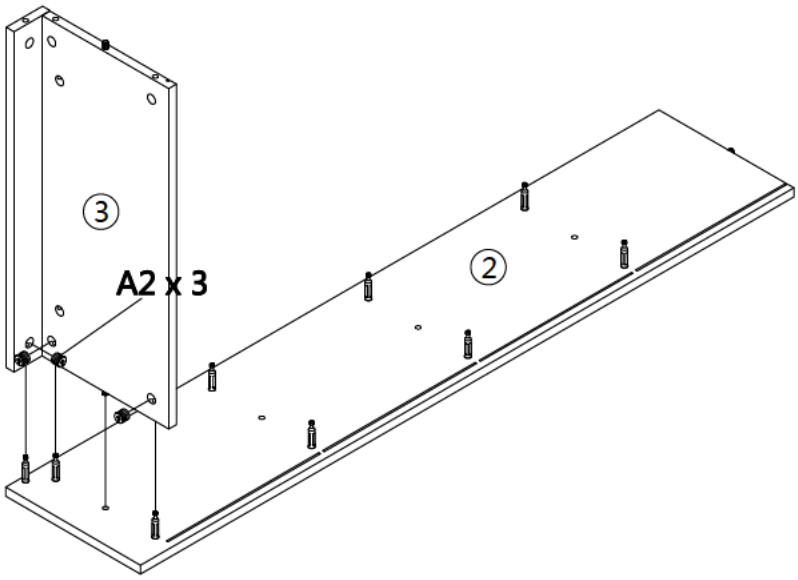

Step 7

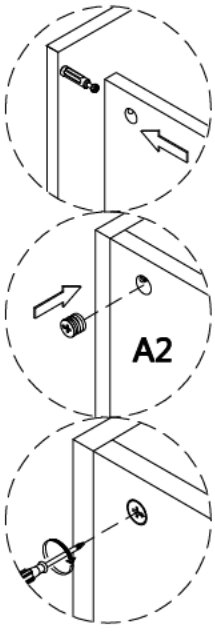

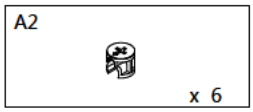

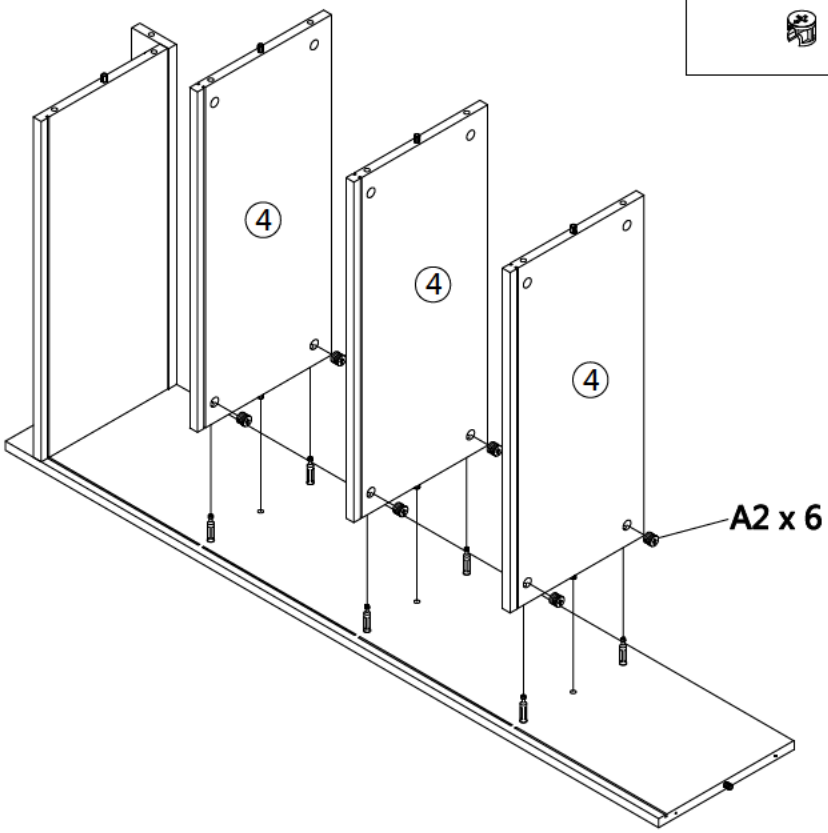

Assembly Instructions

Step 8

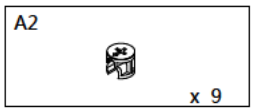

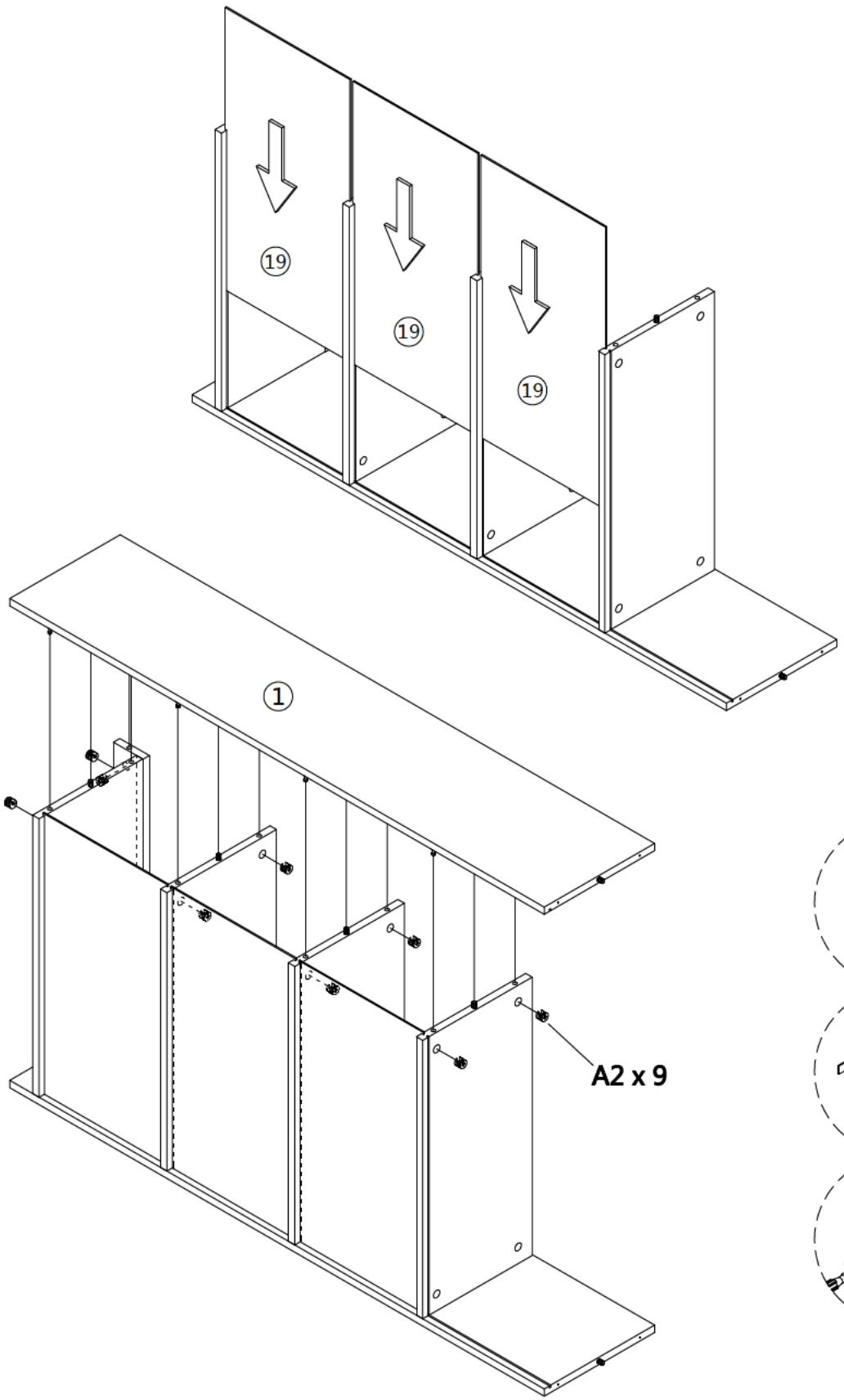

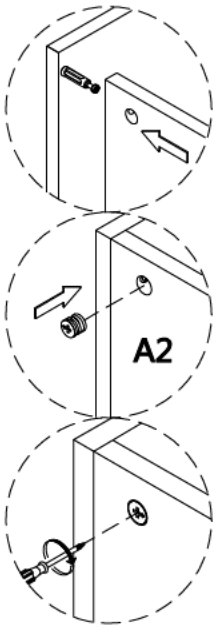

Assembly Instructions

Step 9

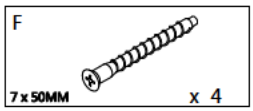

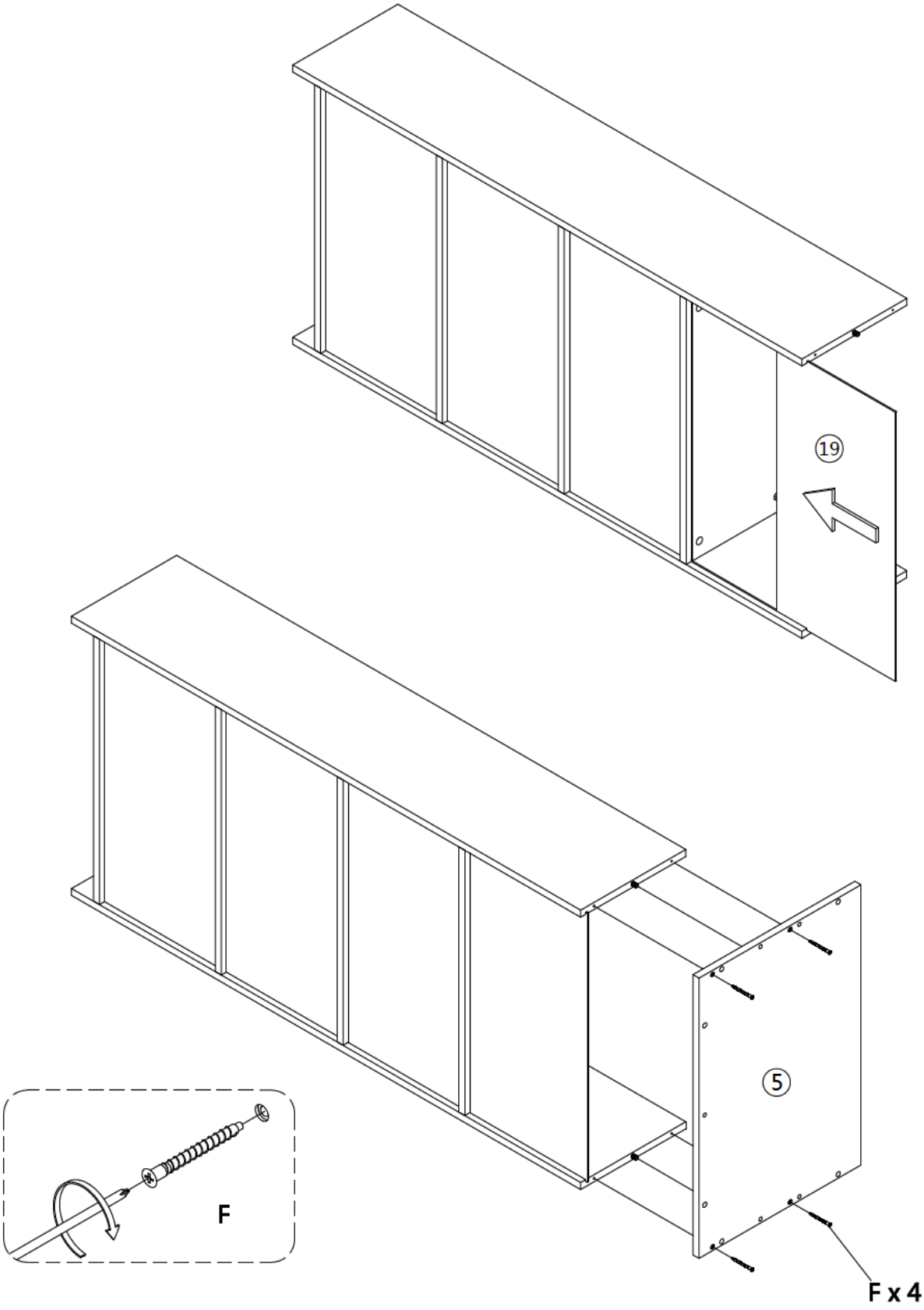

Assembly Instructions

Step 10

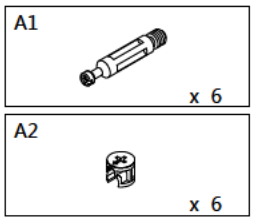

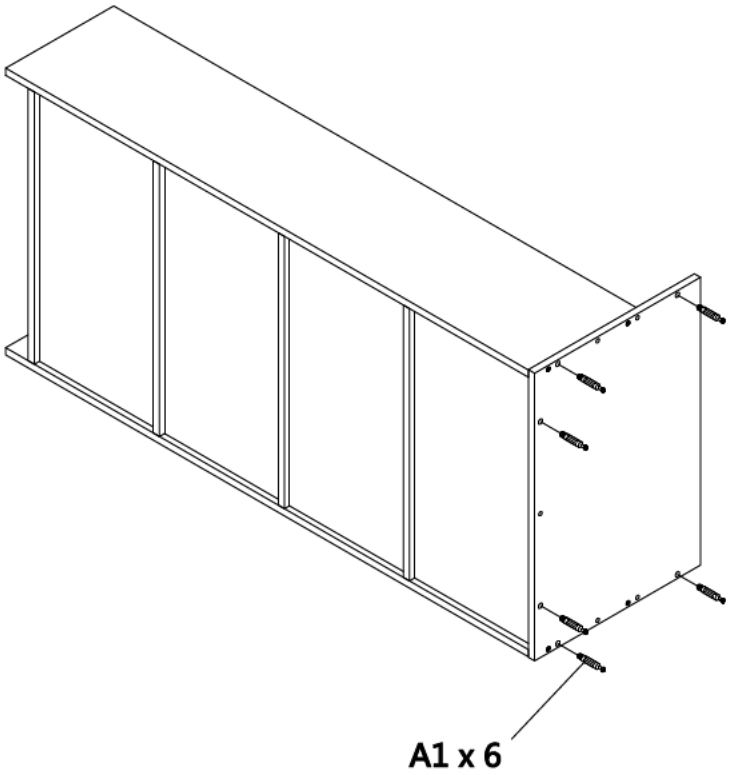

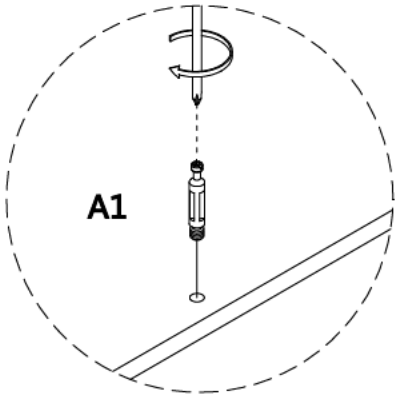

A1 x 6

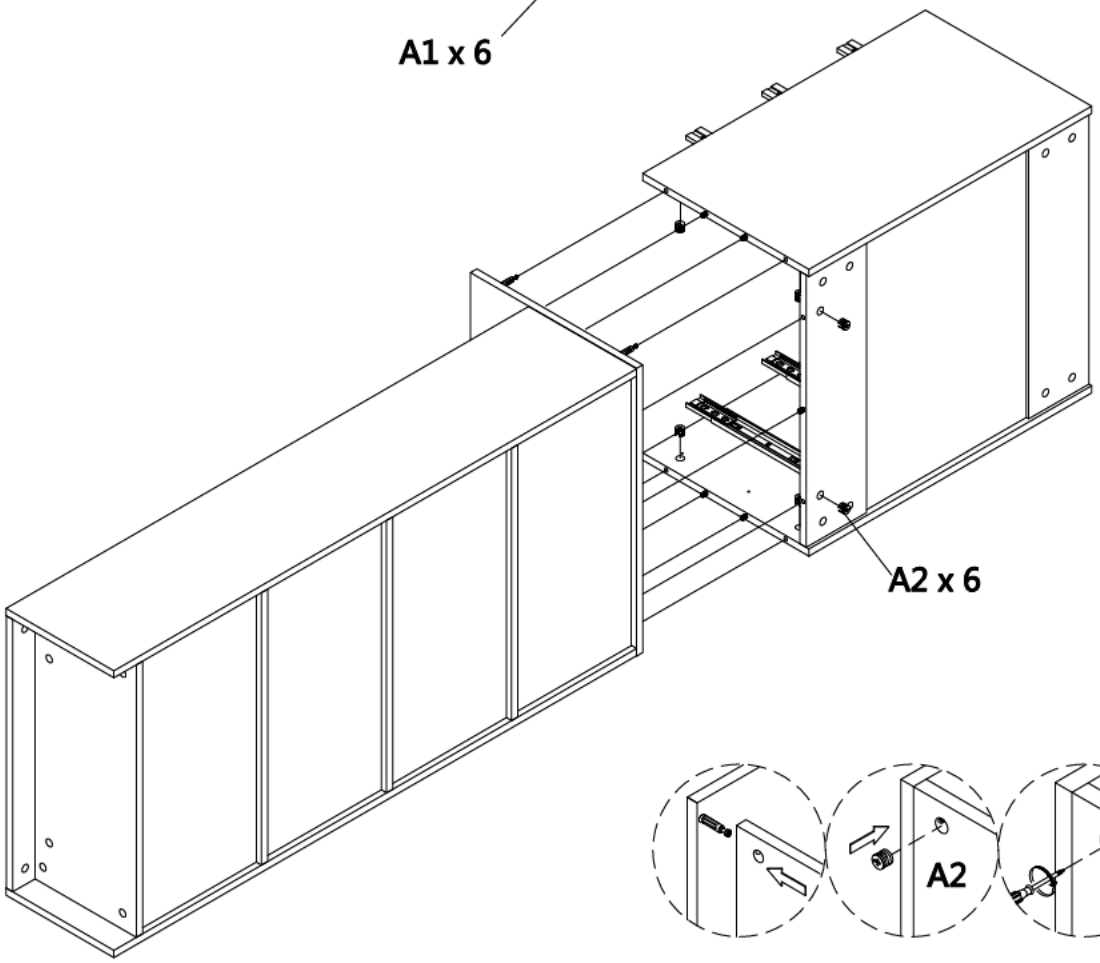

Assembly Instructions

Step 11

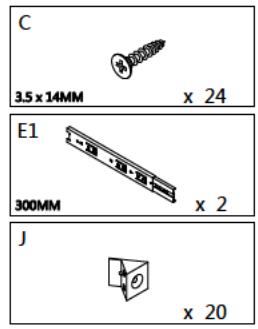

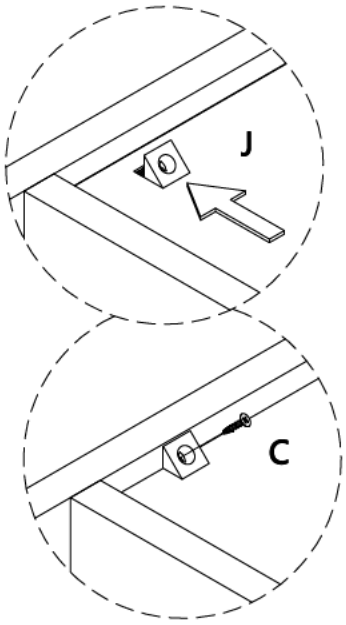

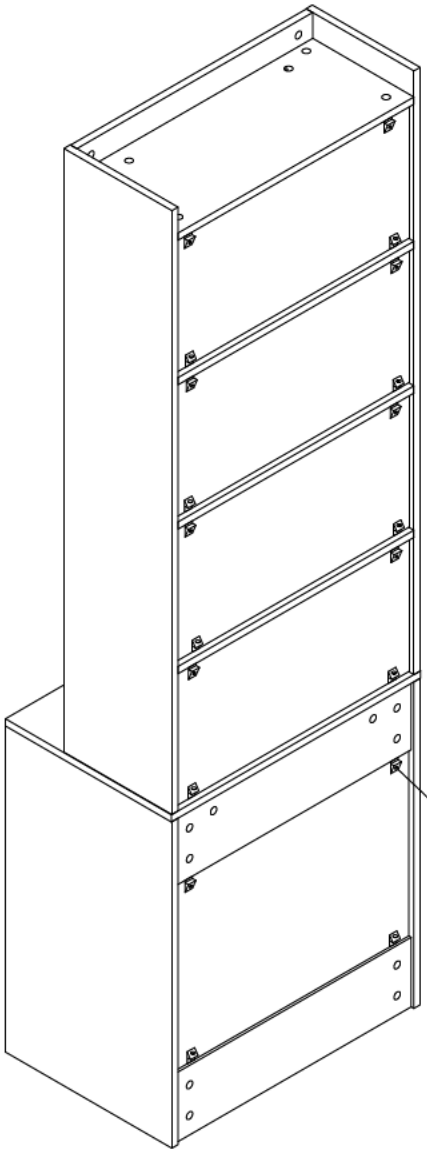

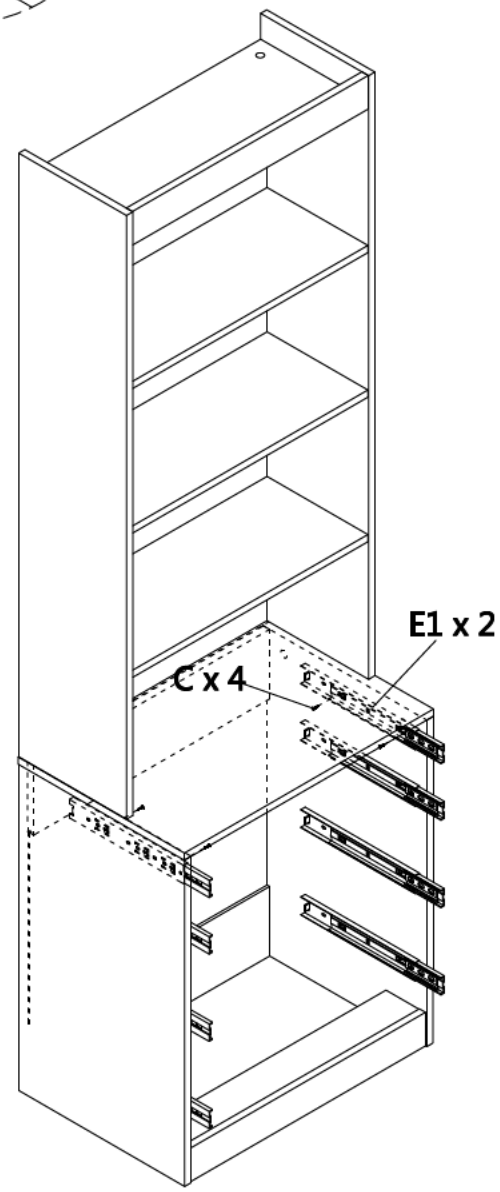

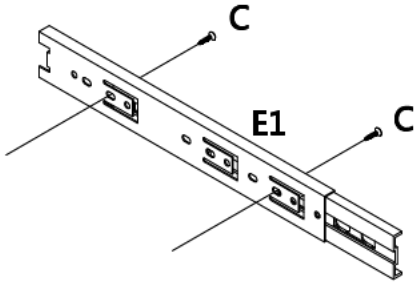

Assembly Instructions

Step 12

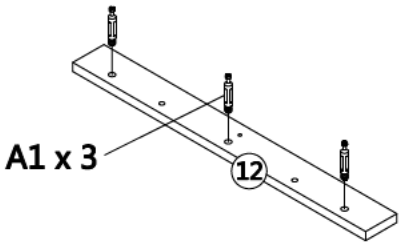

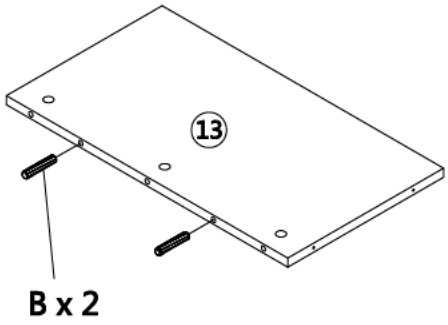

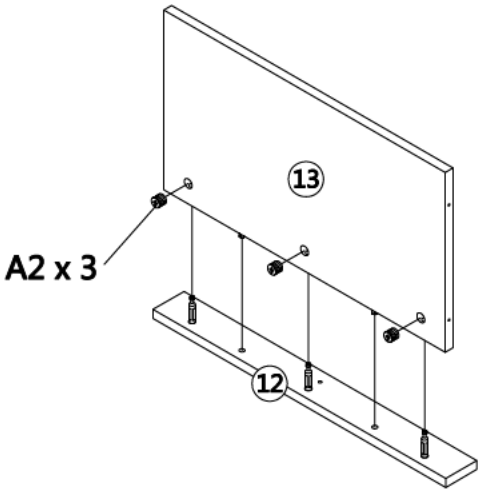

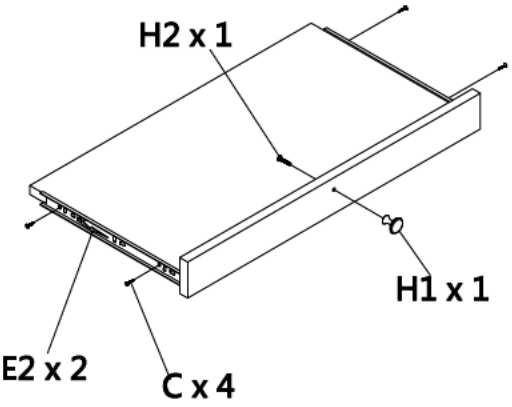

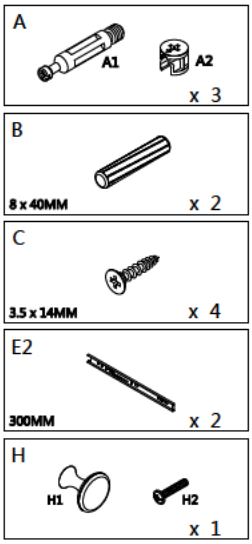

Step 13

x 3

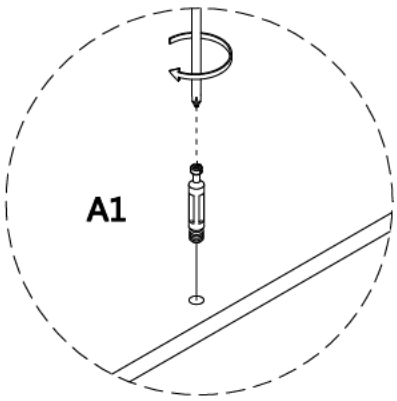

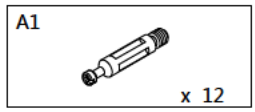

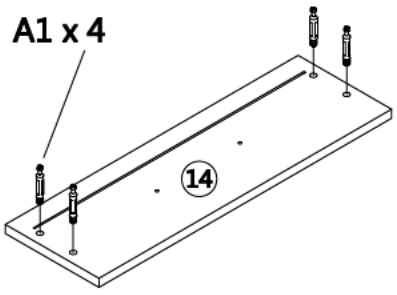

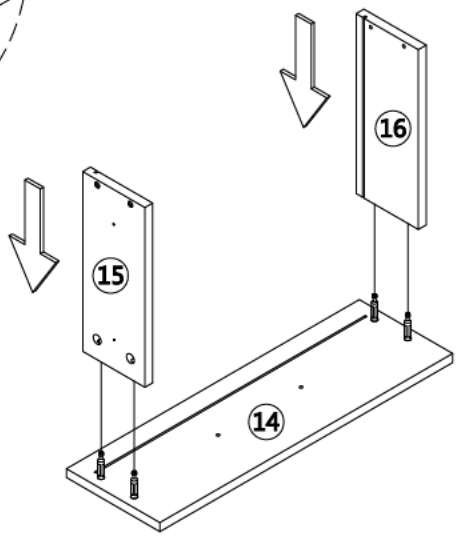

Assembly Instructions

Step 14

x 3

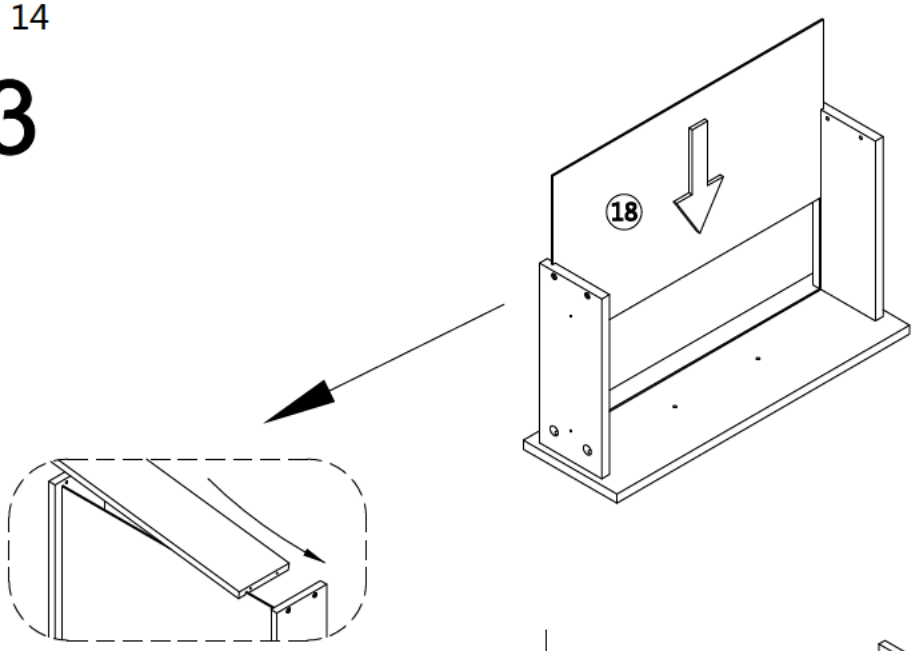

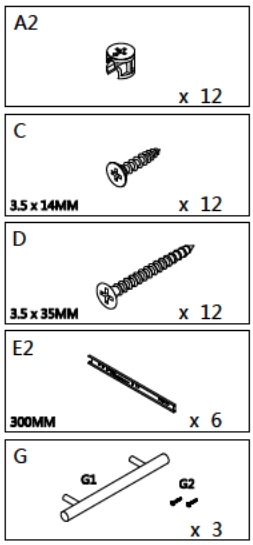

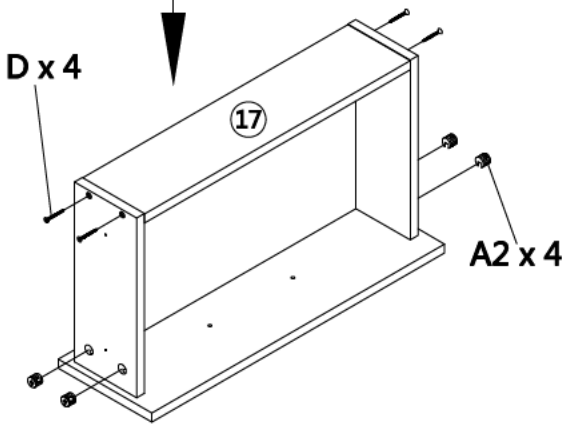

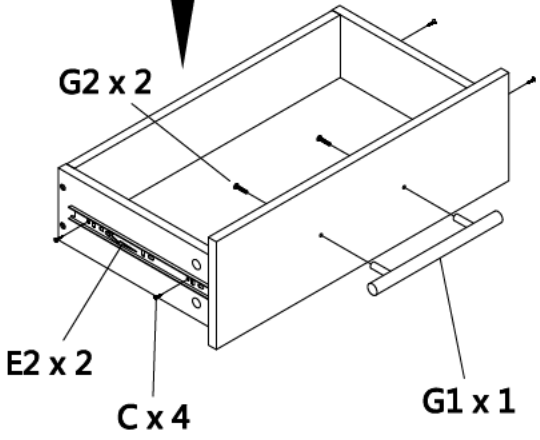

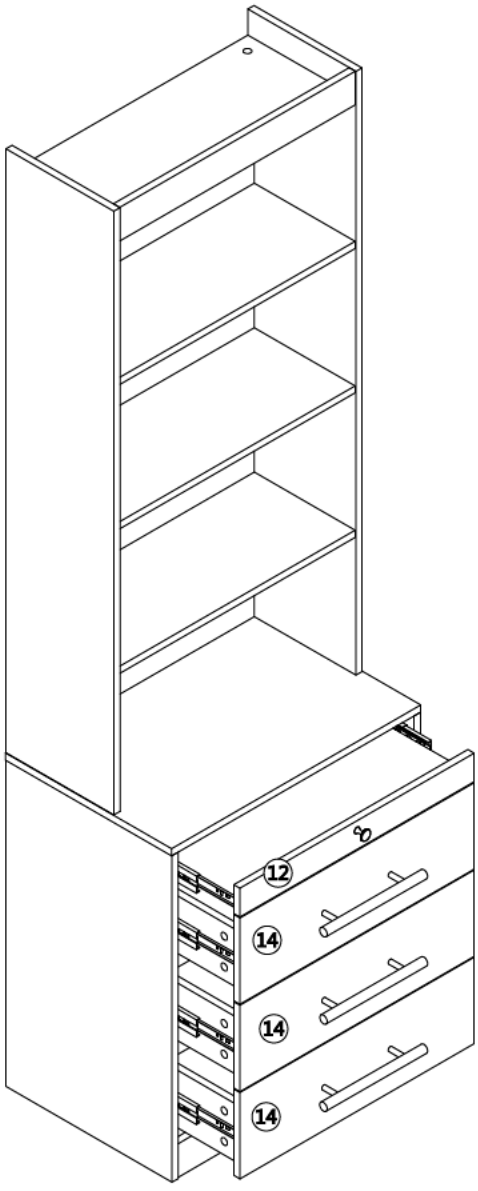

Assembly Instructions

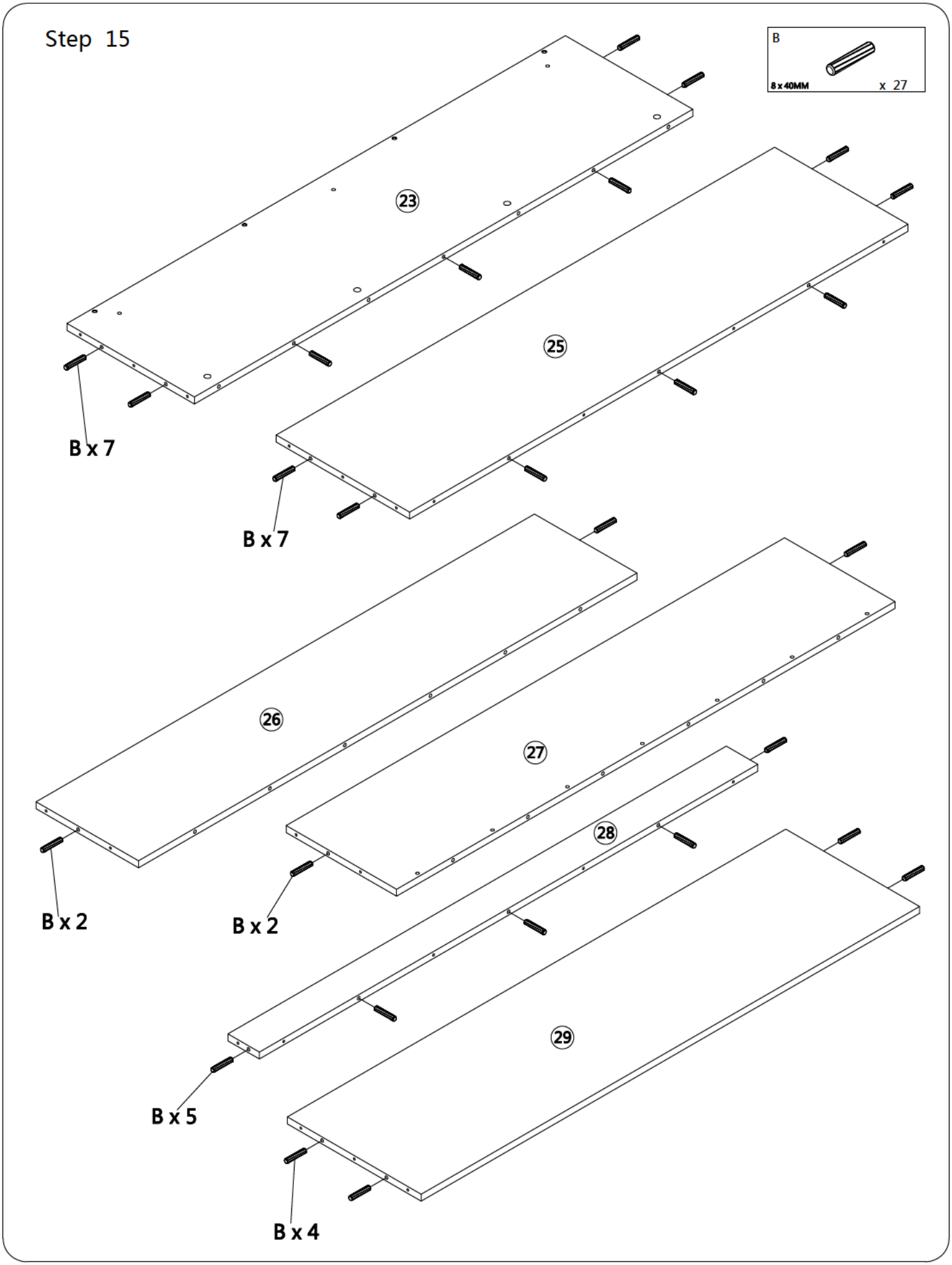

Assembly Instructions

Step 16

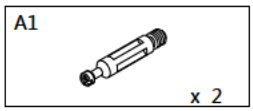

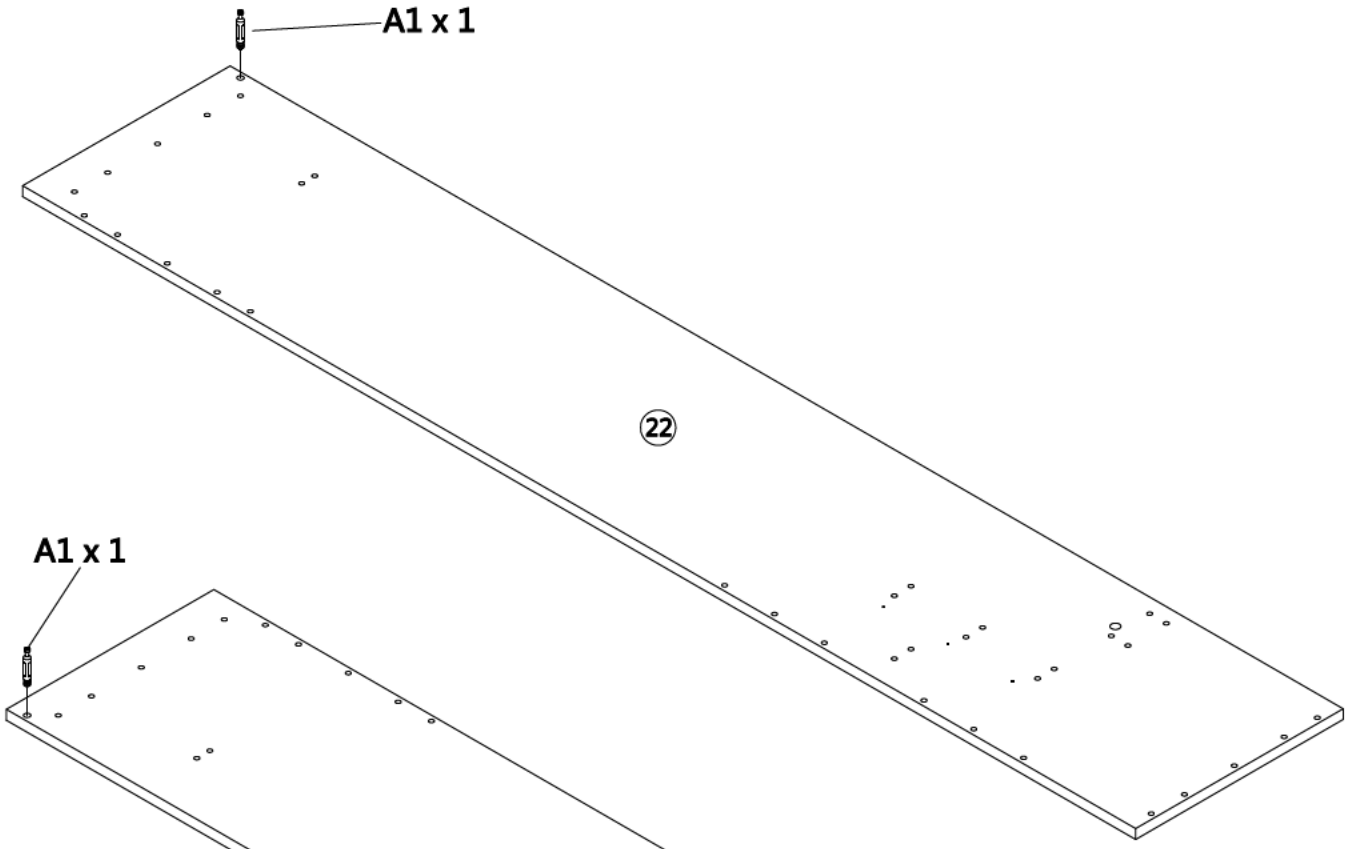

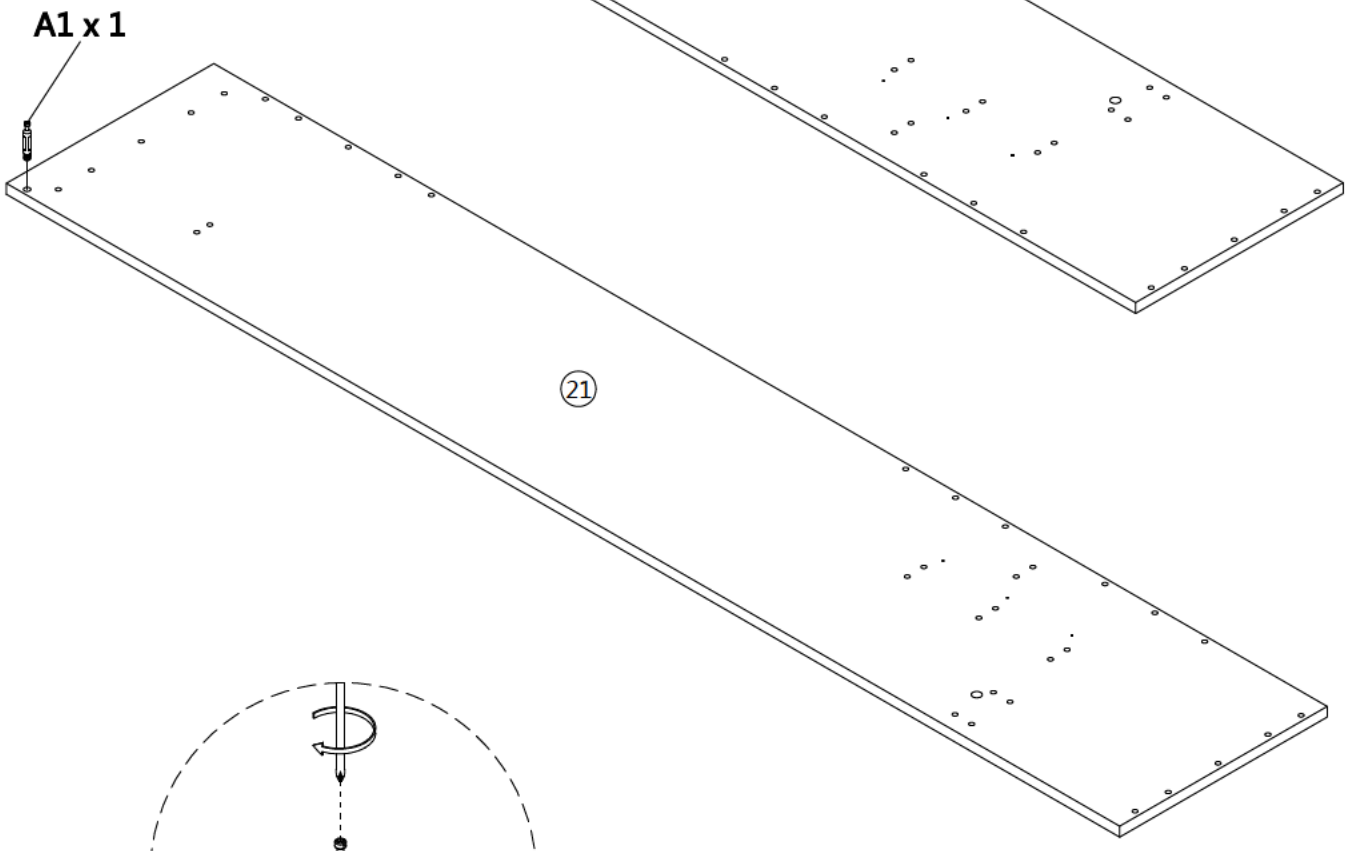

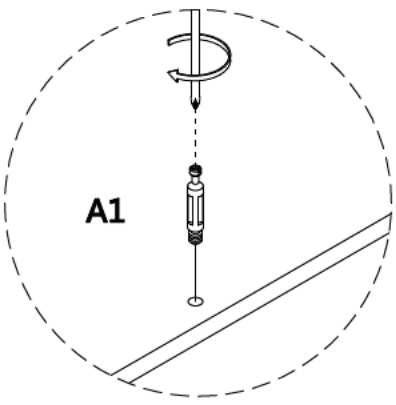

Assembly Instructions

Step 17

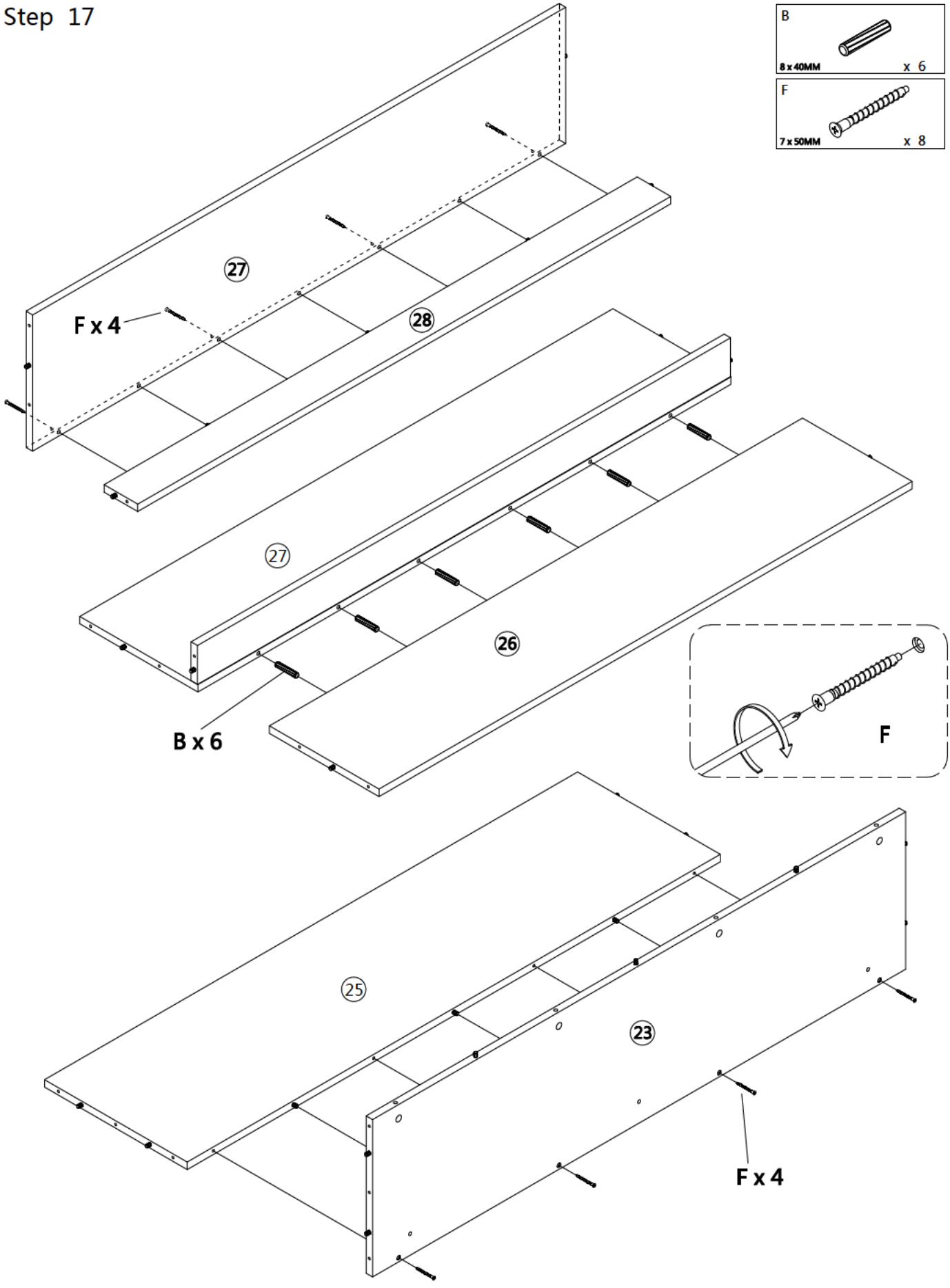

Assembly Instructions

Step 18

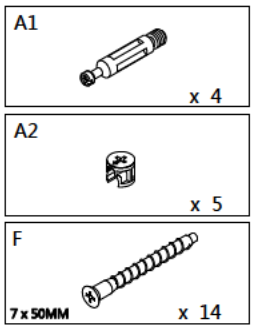

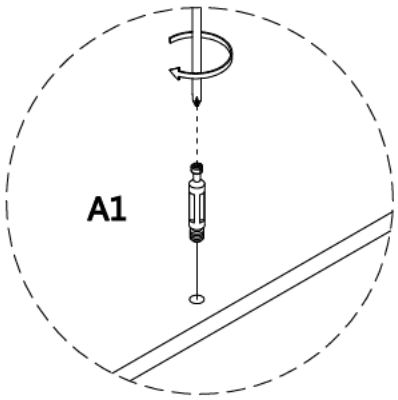

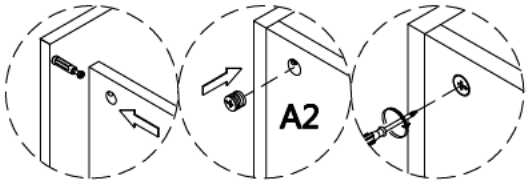

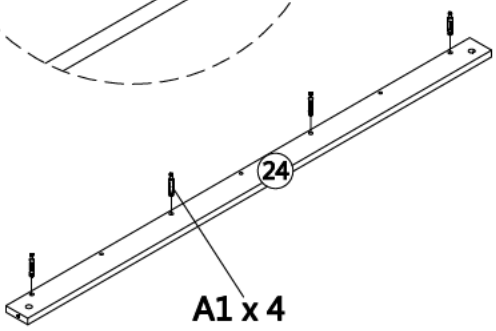

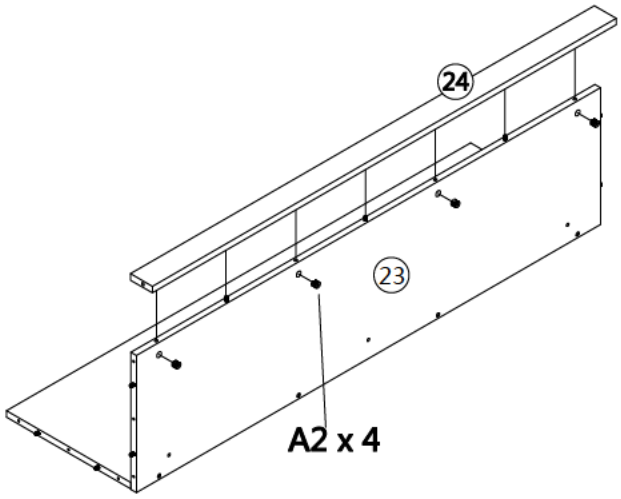

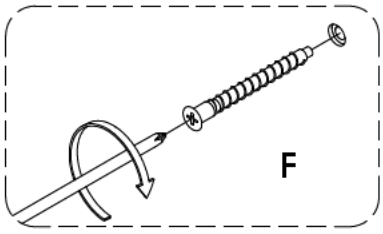

Assembly Instructions

Step 20

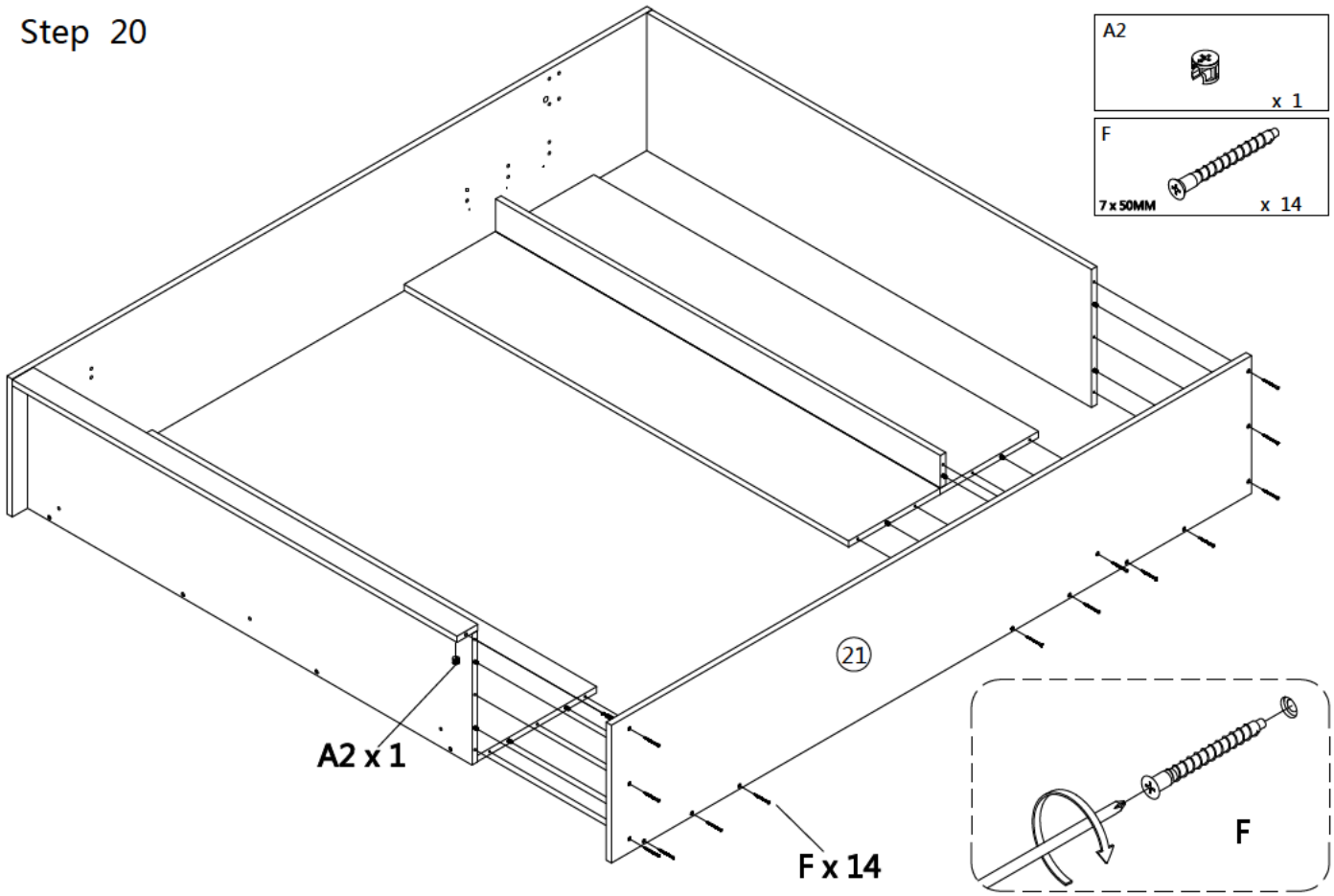

Step 21

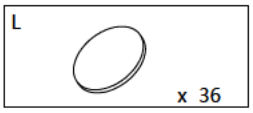

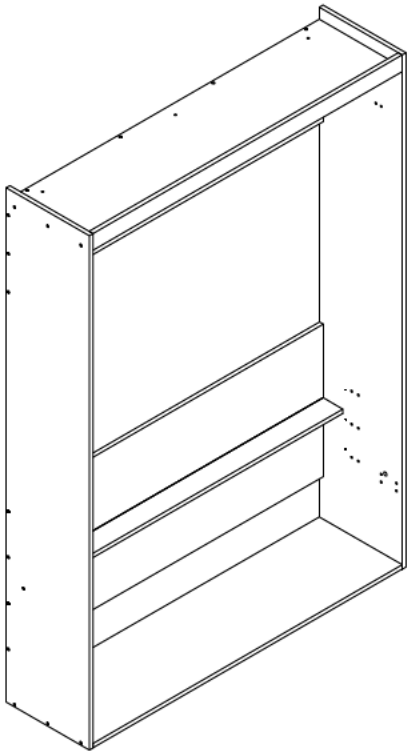

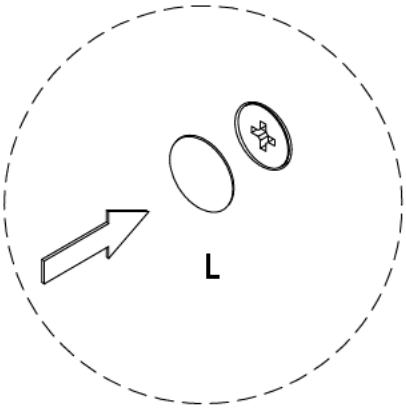

In order to make the product more beautiful, please paste hardware L on the exposed holes

Assembly Instructions

WALL ANCHORING INSTRUCTIONS

INSTALLATION RECOMMENDATIONS — MASONRY

1 Determine the position of the bed in the room.

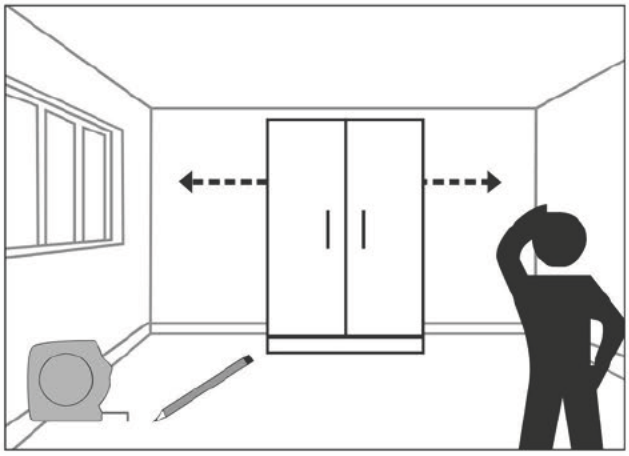

2 Put the bed back in its place. Please keep it vertical and horizontal

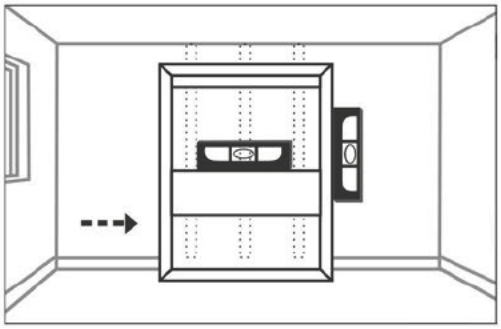

3 Pre-drill the piece of plywood #8 with 6 pilot holes of 3/8" (8 mm) diameter distributed horizontally in order to cover the width of the anchoring section. With the bed in position, mark the position of the 6 holes on the masonry wall.

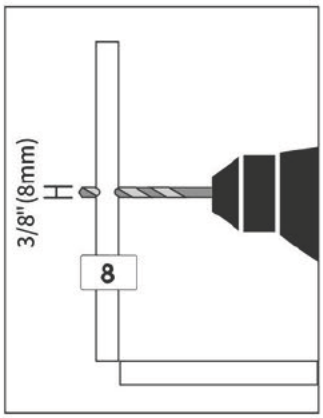

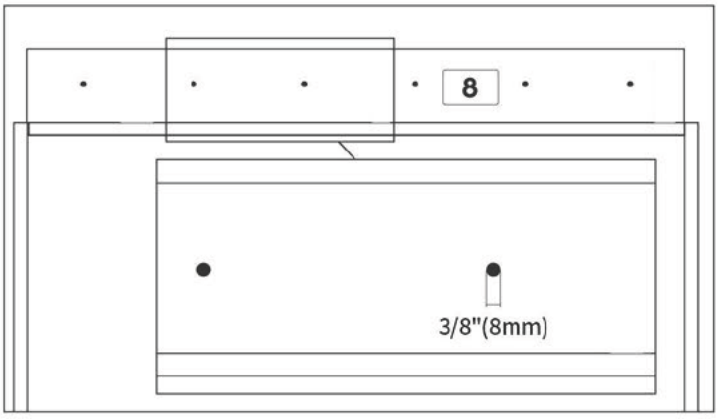

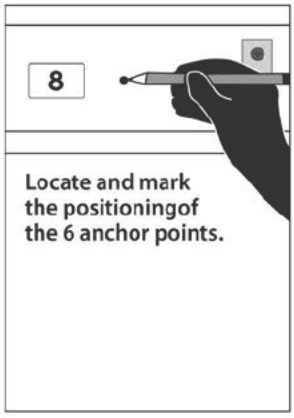

4 Move the bed again.

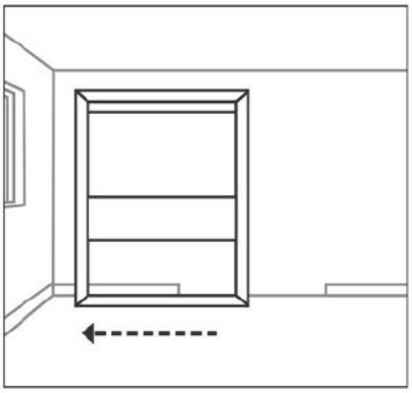

5 Using a 5/32" (10mm) diameter masonry bit, drill into the drywall and masonry (a hammer drill is required).

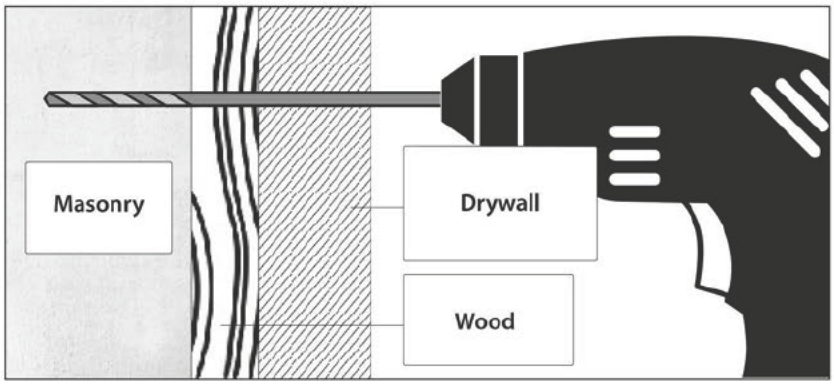

Assembly Instructions

WALL ANCHORING INSTRUCTIONS

INSTALLATION RECOMMENDATIONS — MASONRY

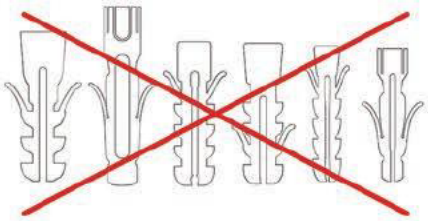

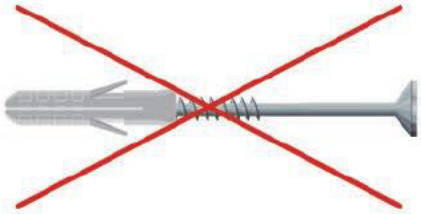

IMPORTANT WARNINGS

INSTALLATION AND APPROPRIATE HARDWARE
Using appropriate hardware, all the anchor screws of the wall bed must be firmly secured to the wood or metal studs, the structural components, or a masonry wall. **Only wall anchor screws for wood-frame walls are provided with this bed.**

NUMBER OF SCREWS NEEDED
You need a total of six (6) wall anchor screws.

THE SCREWS MUST BE VERY WELL ANCHORED TO THE STRUCTURAL COMPONENTS OF THE WALL.

6 Put the bed back in its place. Put the CONCRETE SCREWS 3/8"(10mm) diameter X APPROPRIATE LENGTH into the holes of part #8 and screw the bed onto the masonry wall until tight against the wall. Screw must be at least 43/8"(110mm) deep into masonry. USE AN ELECTRIC SCREWDRIVER WITH AN ADJUSTABLE TENSION CLUTCH THAT HELPS PREVENT OVER-TIGHTENING AND STRIPPING.

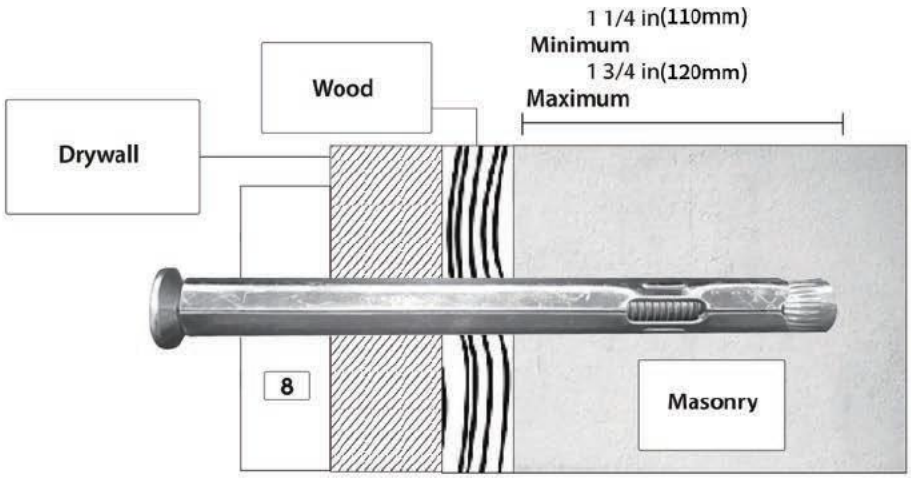

Assembly Instructions

Step 22

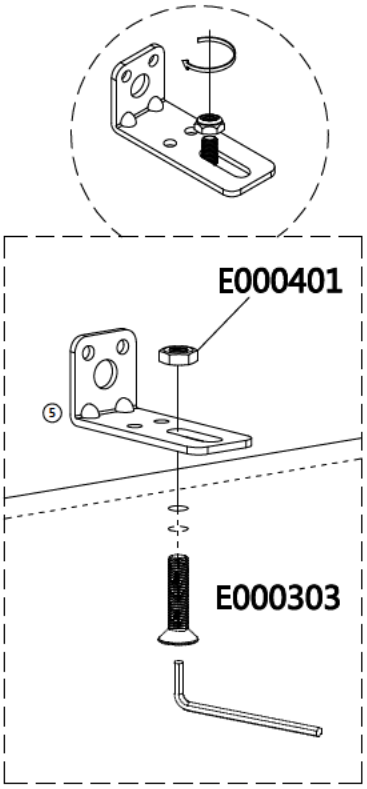

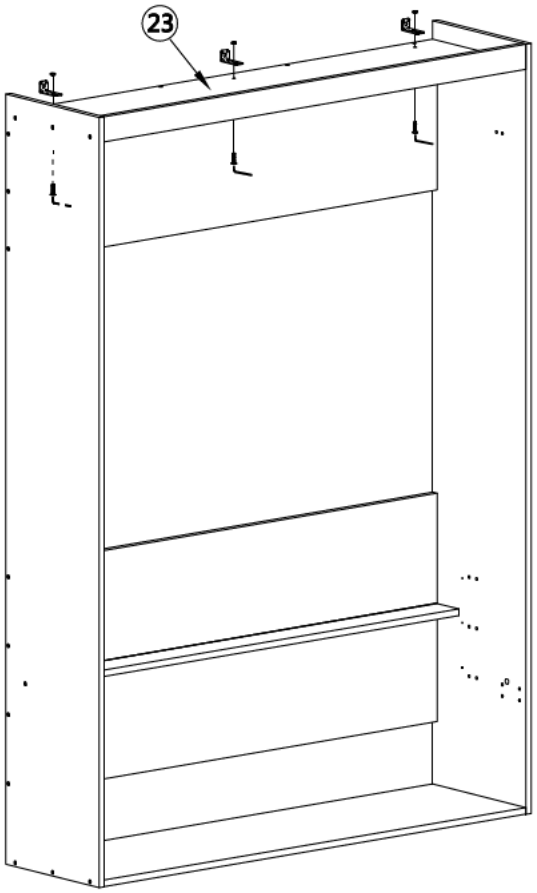

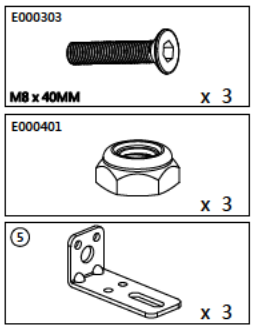

Step 23

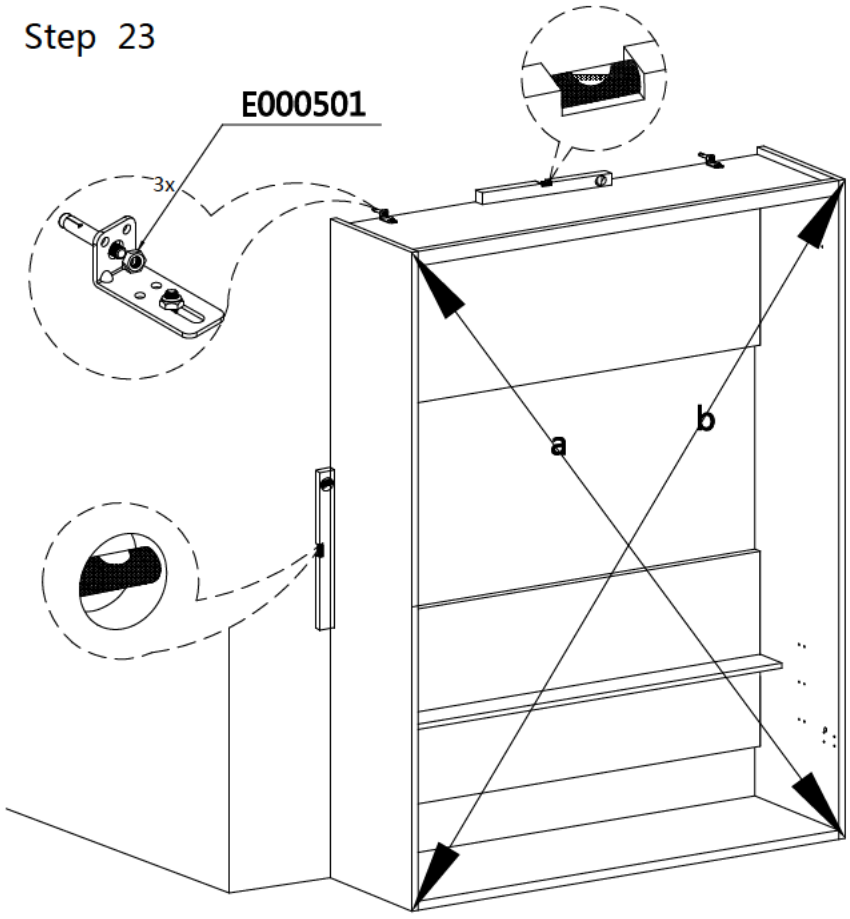

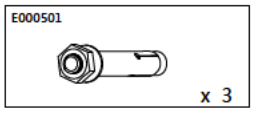

a=b √ a≠b ×

Adjust the level and verticality of the cabinet according to the level ruler (note: it is necessary to ensure that the diagonal of the cabinet is a=b)

Important reminder:

It is necessary to ensure that the cabinet body is firmly connected to the wall and ensure safety before continuing to install hardware components. And regularly check during future use to ensure safety

Assembly Instructions

Step 24

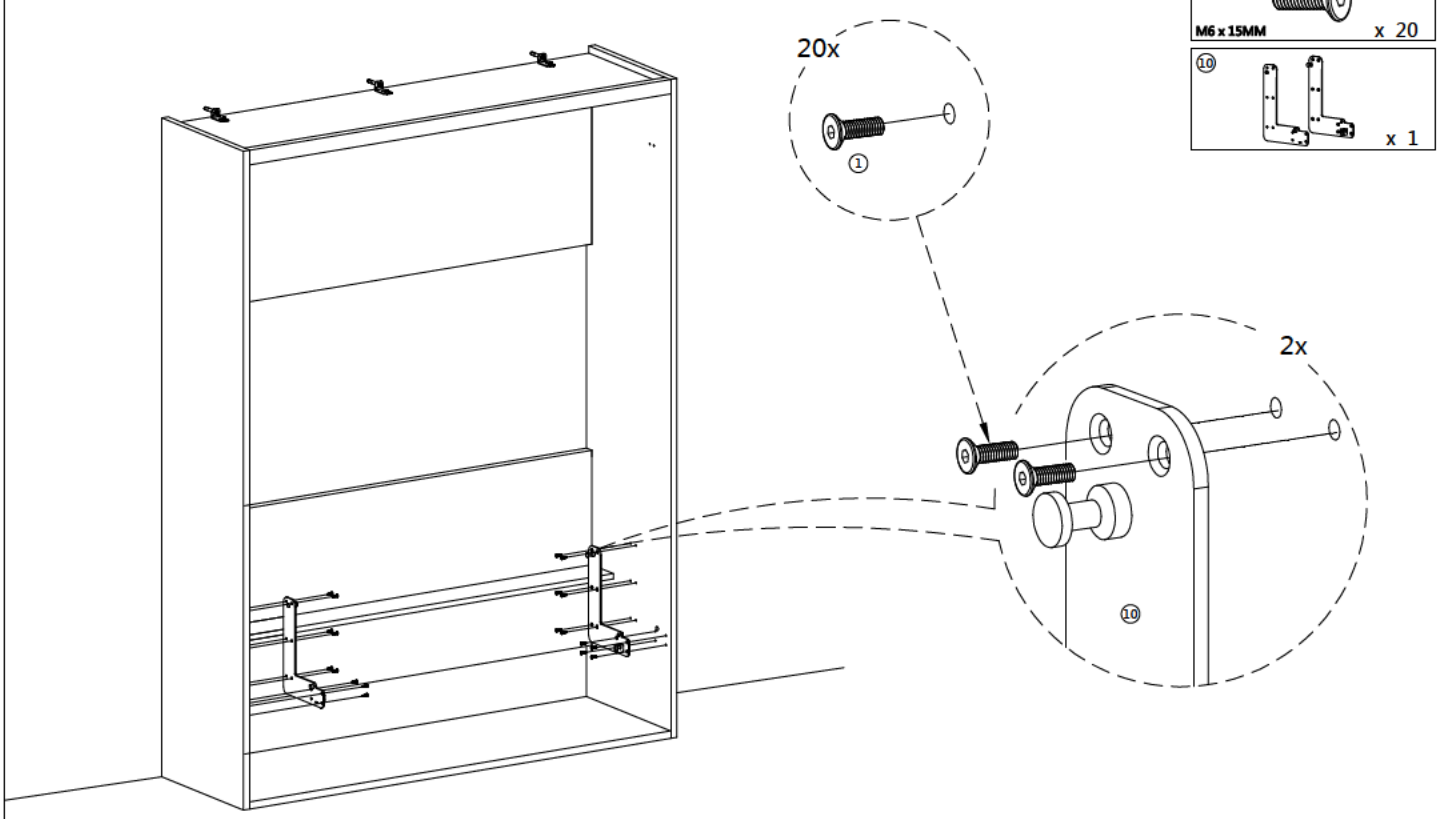

Step 25

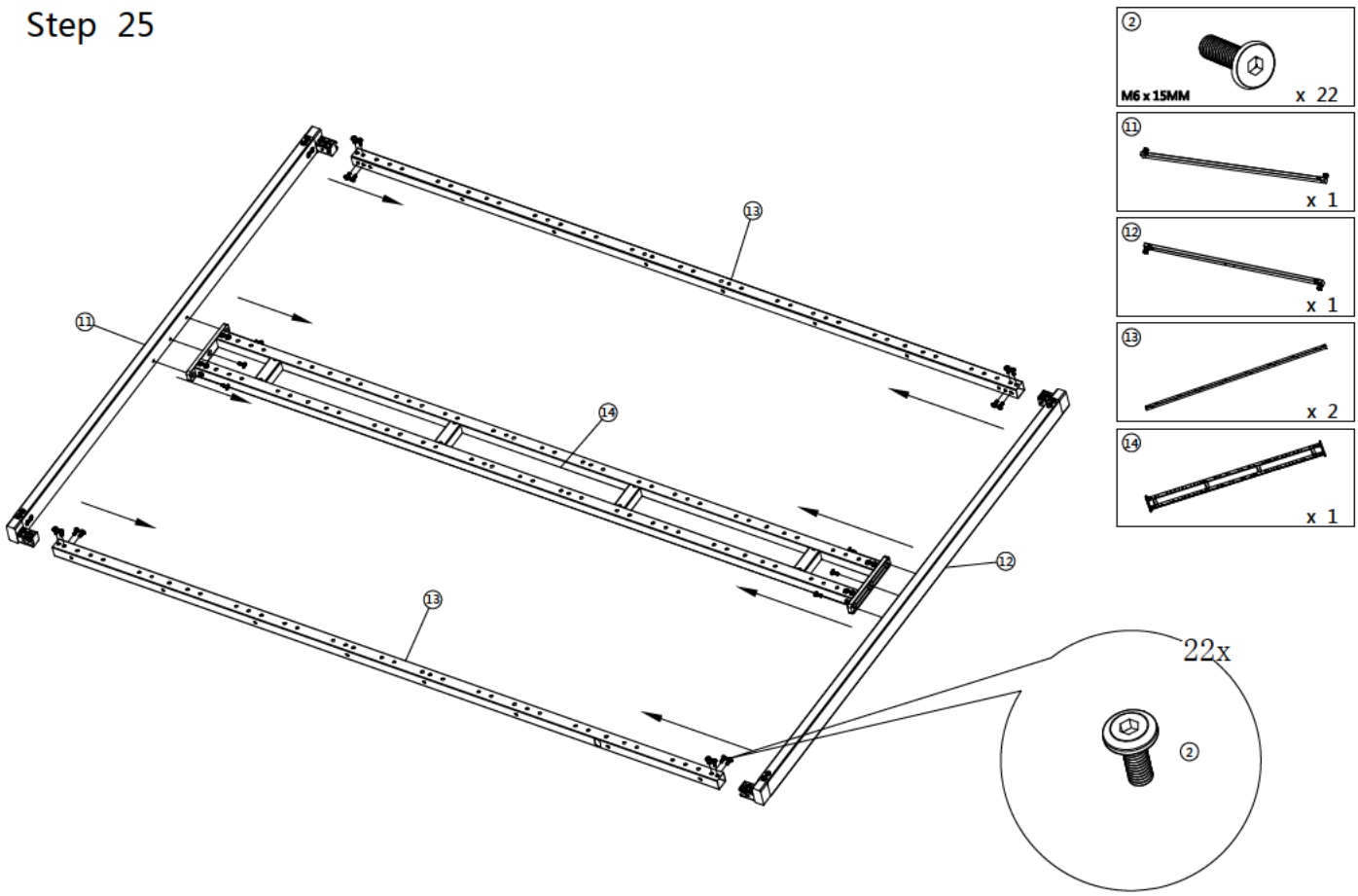

Assembly Instructions

Step 26

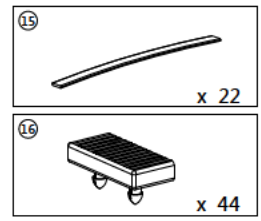

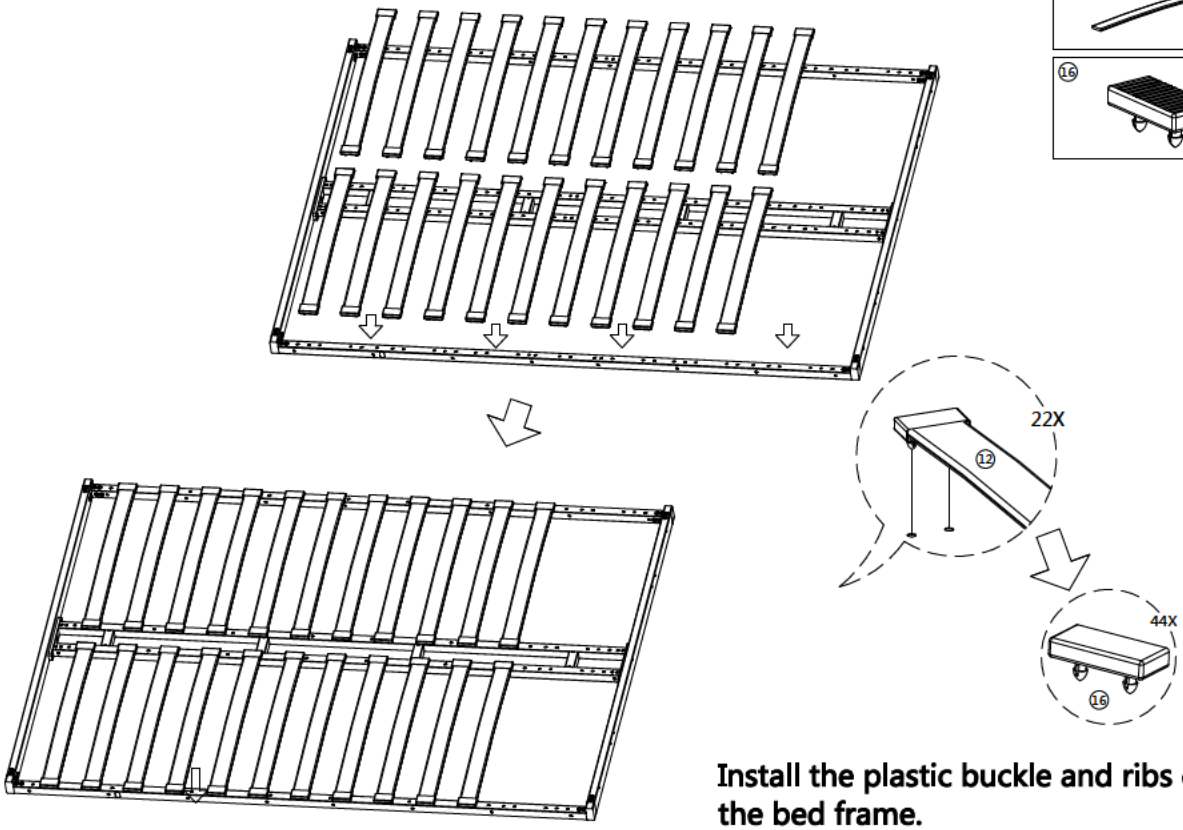

Install the plastic buckle and ribs onto the bed frame.

Step 27

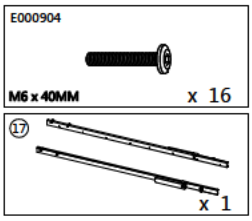

The shafts of the left and right pipes need to be inserted into the corresponding holes on the left and right sides of the bed frame, as shown.

the leg must face the direction of the frame with holes on.

Assembly Instructions

Step 28

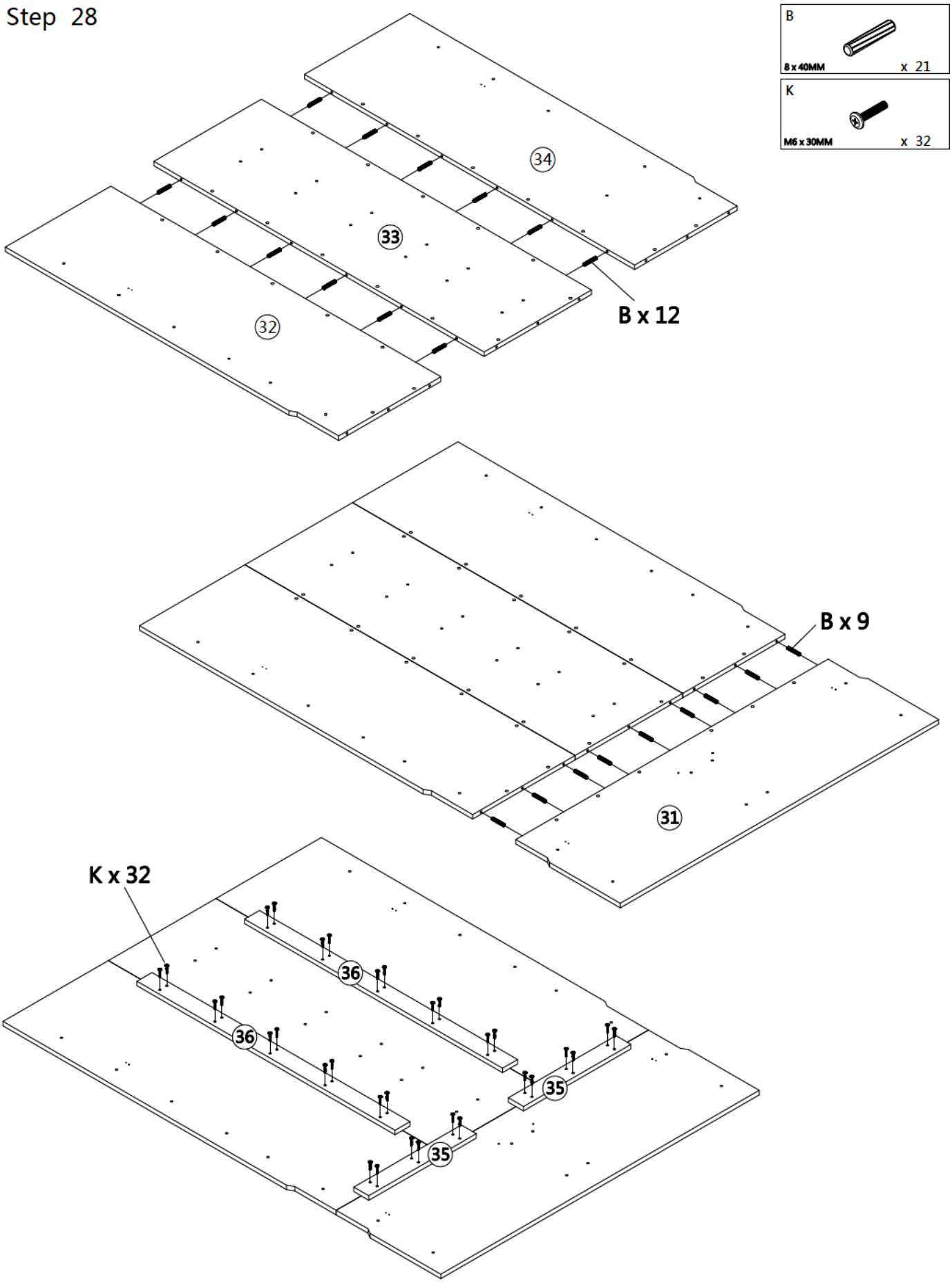

Assembly Instructions

Step 29

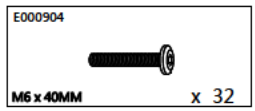

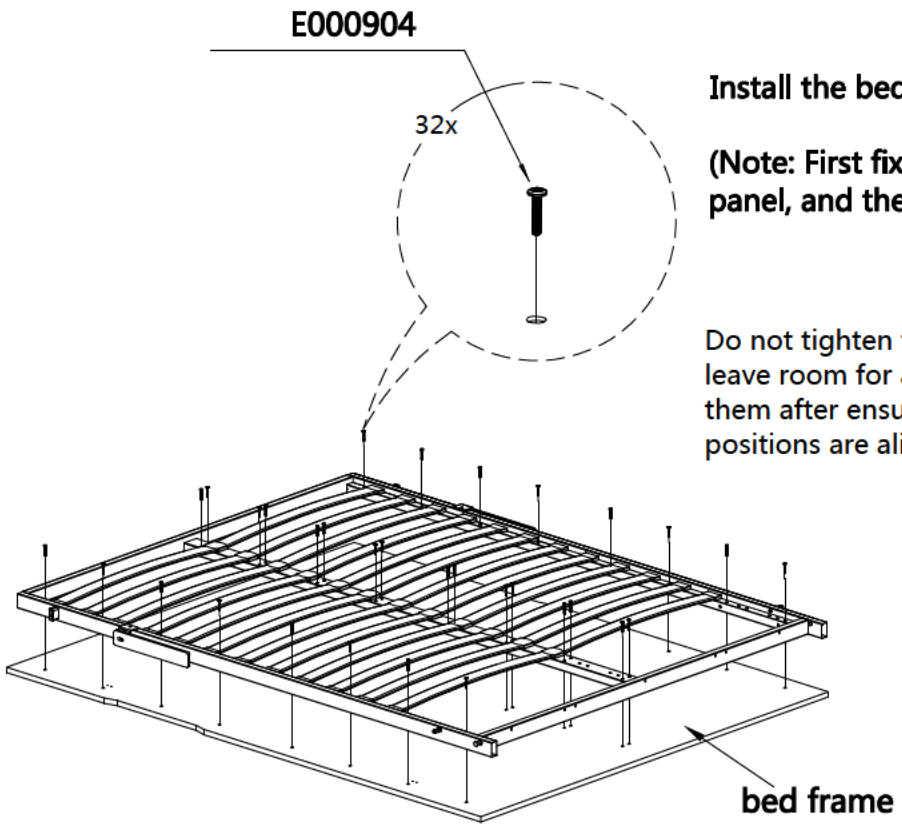

Install the bed panel onto the bed frame

(Note: First fix the four corners of the bed panel, and then install the screws around it)

Do not tighten the screws too much to leave room for adjustment. Tighten them after ensuring all the holes positions are aligned with the screws.

Step 30

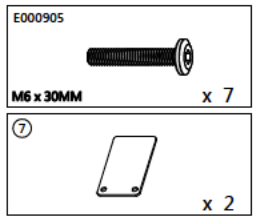

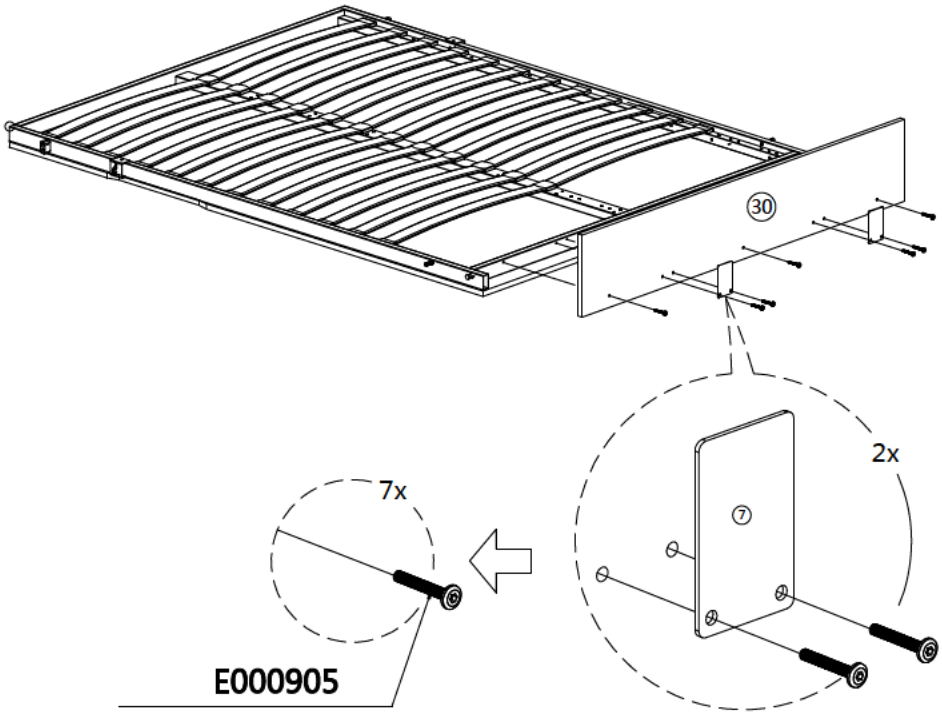

Assembly Instructions

Step 31

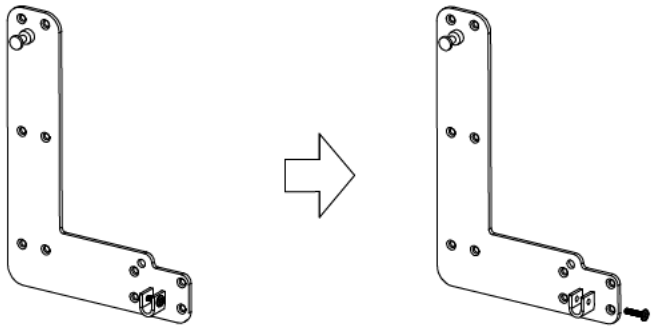

First, remove the pre installed screws here.

After placing the bed frame, use the removed screws to retract it onto the U-shaped support block and secure the bed frame.

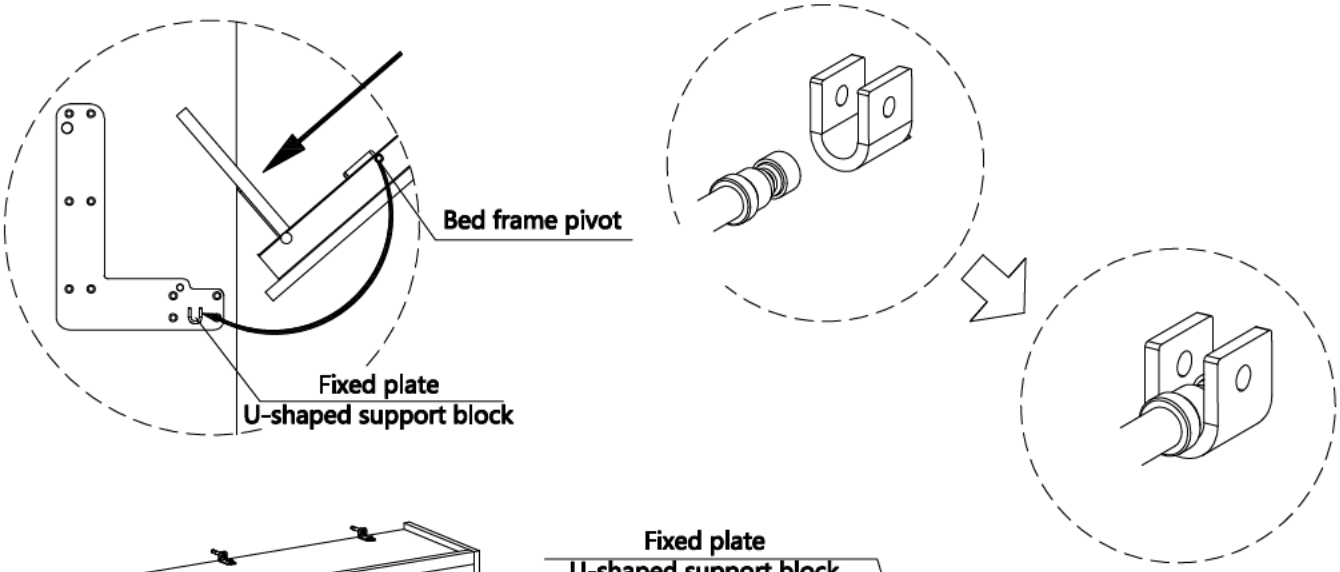

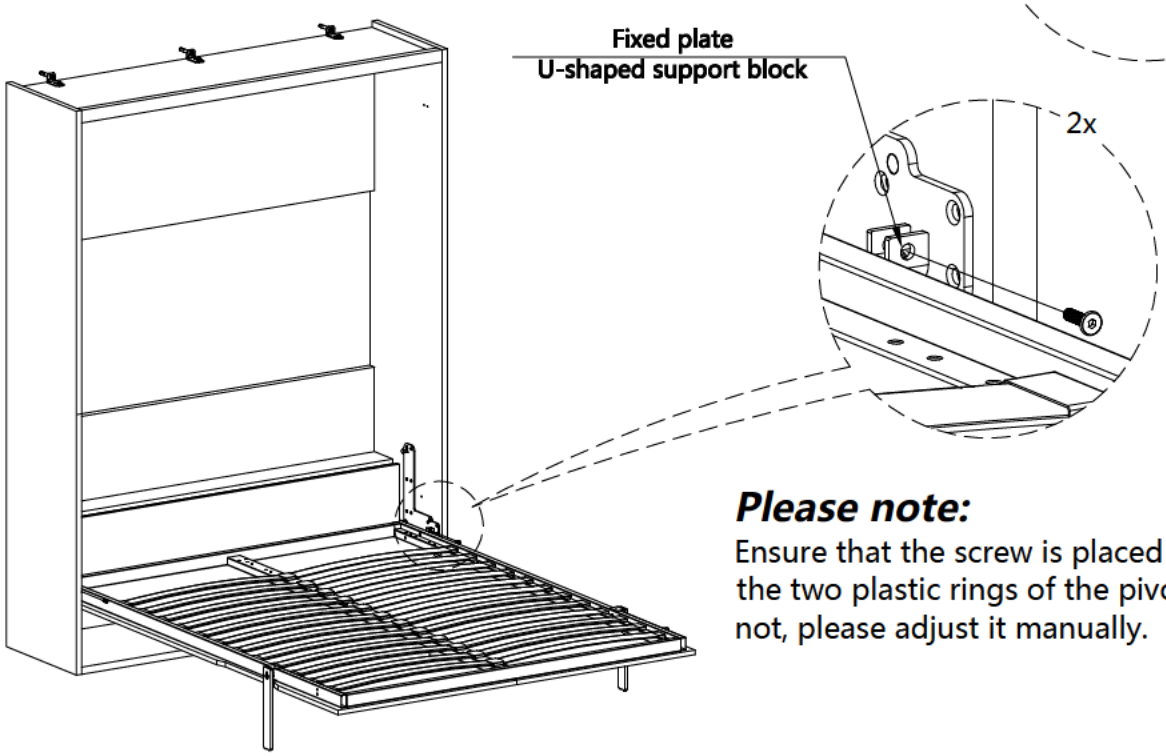

Please note:

Ensure that the screw is placed between the two plastic rings of the pivot. If it is not, please adjust it manually.

Assembly Instructions

Step 32

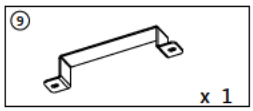

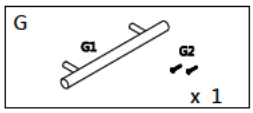

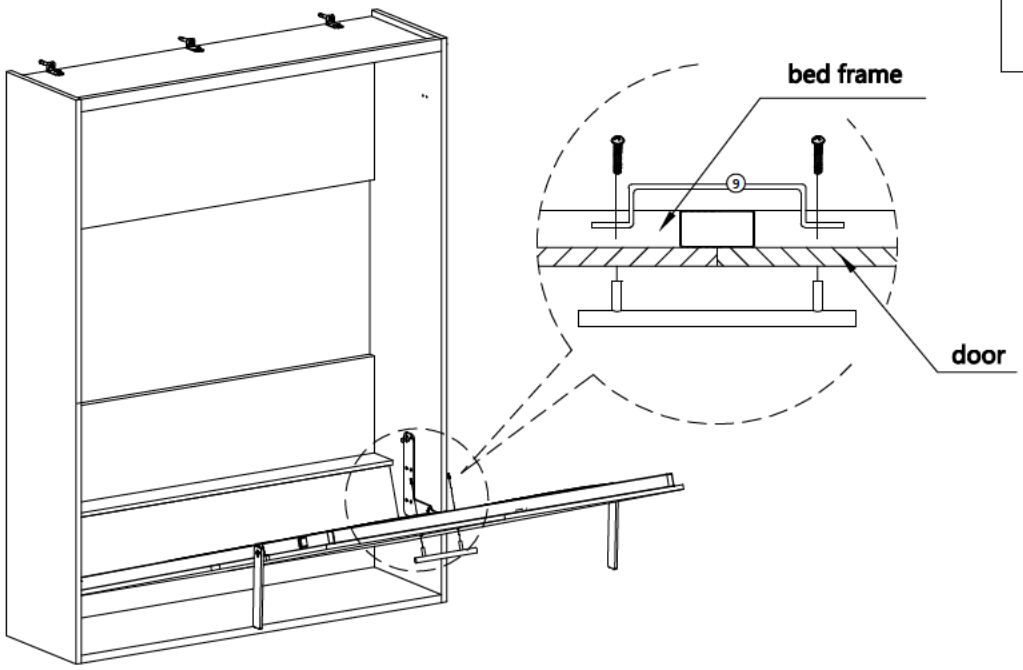

Step 33

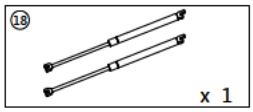

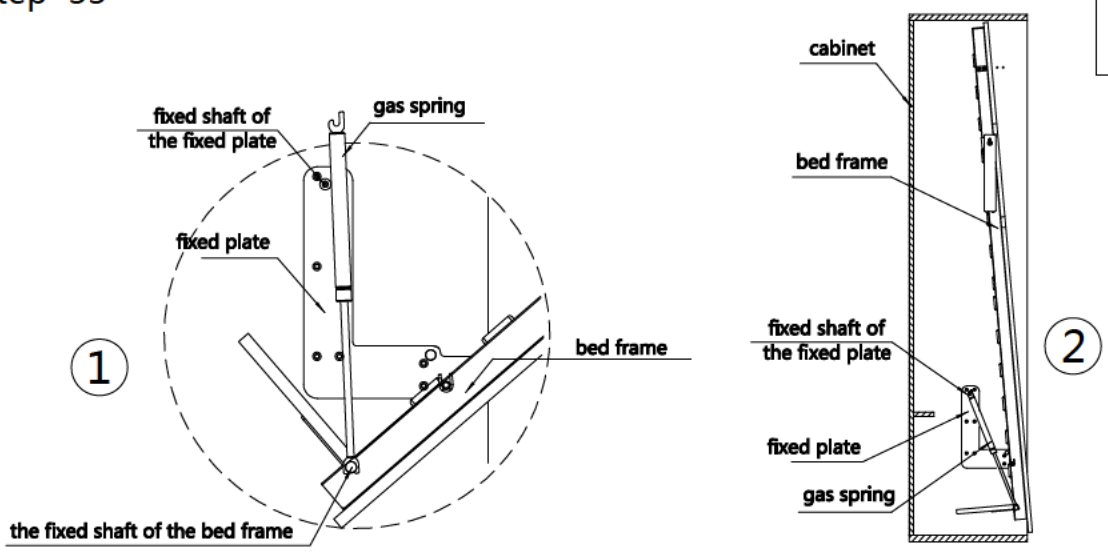

1. Place the lower end of the gas spring on the fixed shaft of the bed frame (as shown in Figure ①), and make the upper part of the gas spring lean against the fixed shaft of the fixed plate
2. Then flip the bed frame upwards to over 90 degrees, causing the upper end of the gas spring to slide onto the fixed shaft of the fixed plate (as shown in Figure ②)

(Special note: Gas springs cannot be installed upside down)

Assembly Instructions

Step 34

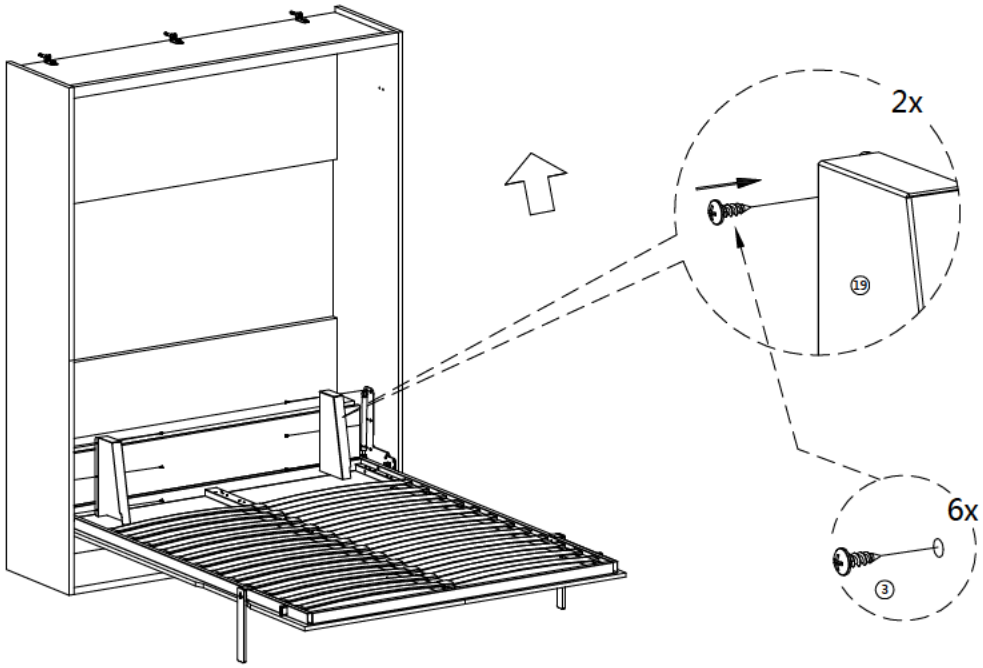

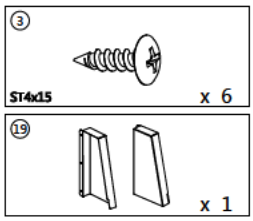

Step 35

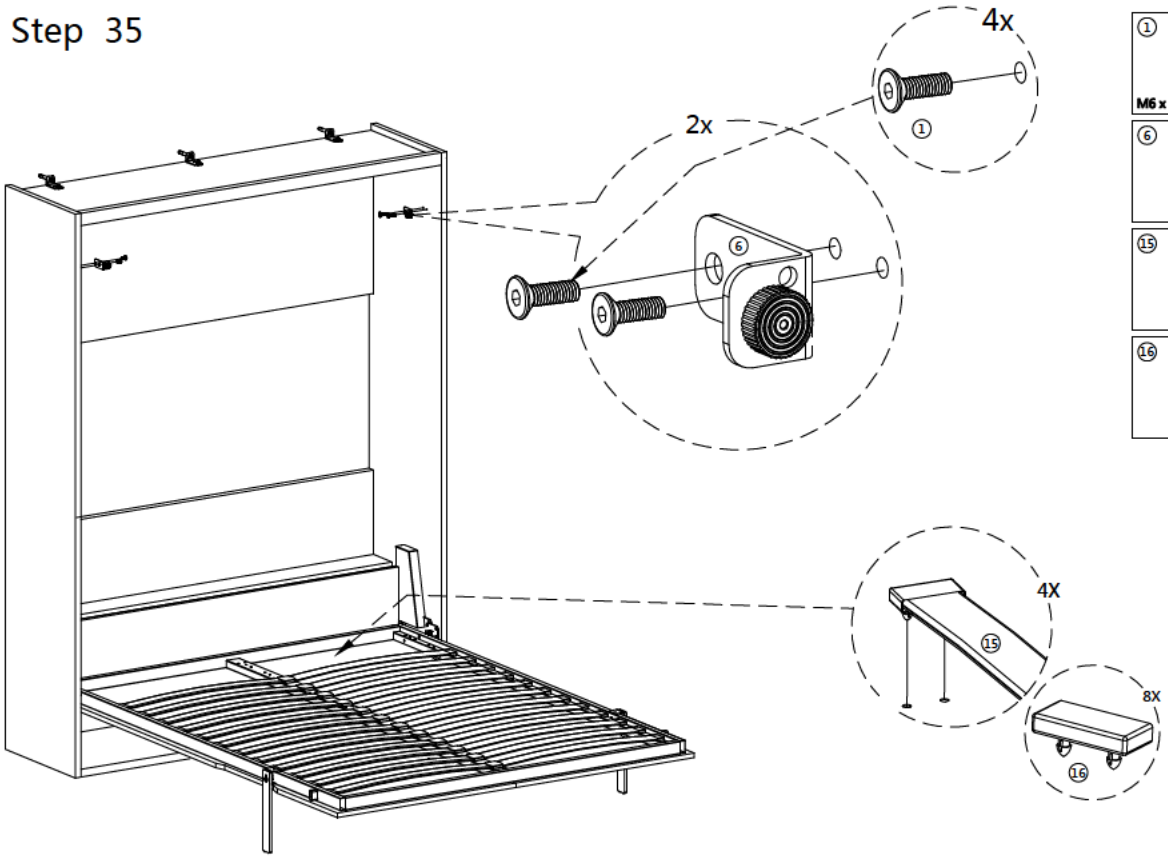

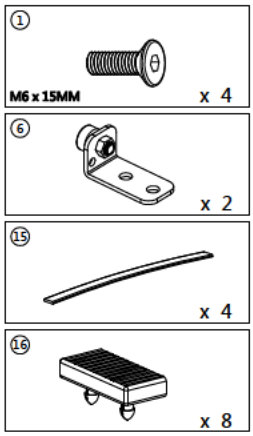

Assembly Instructions

Step 36

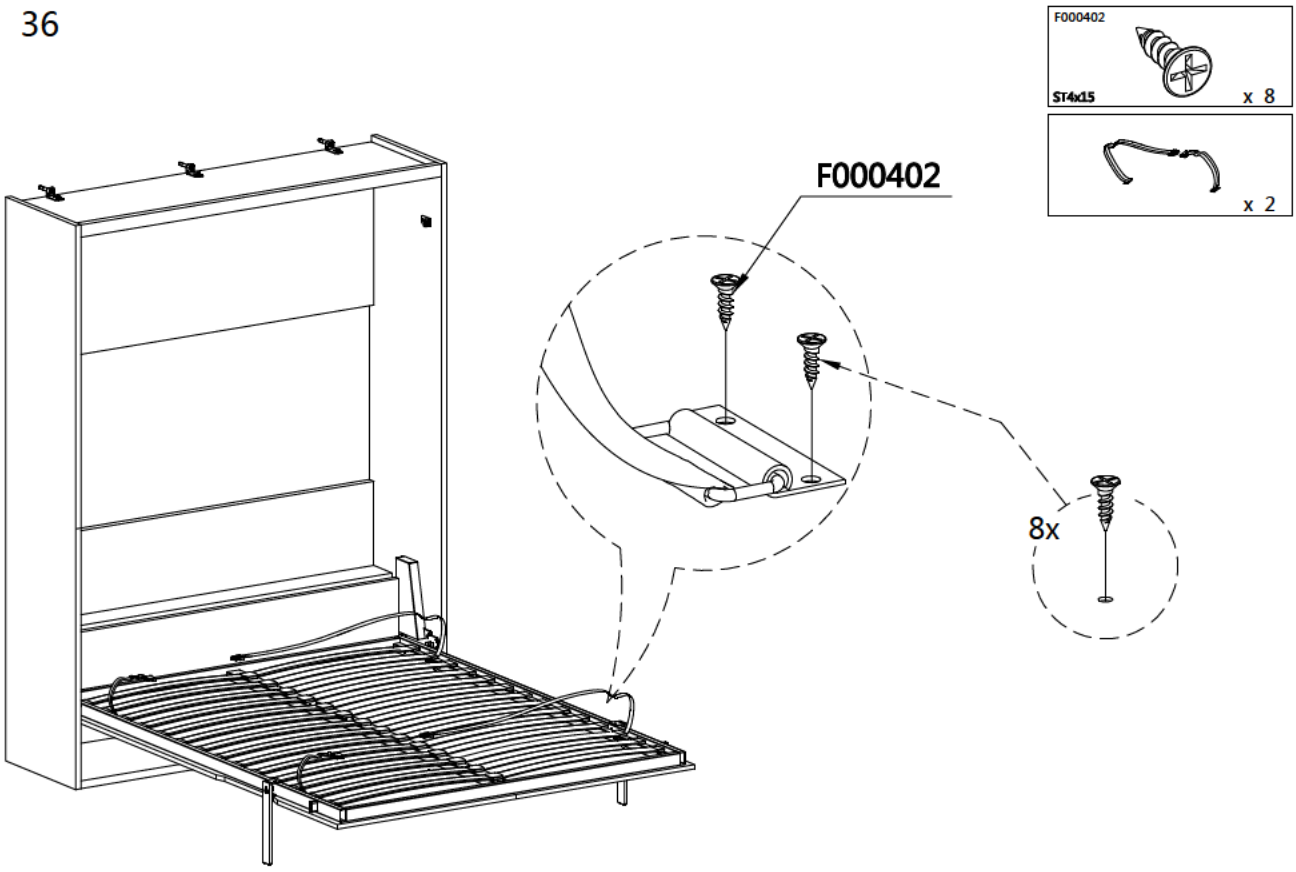

Step 37

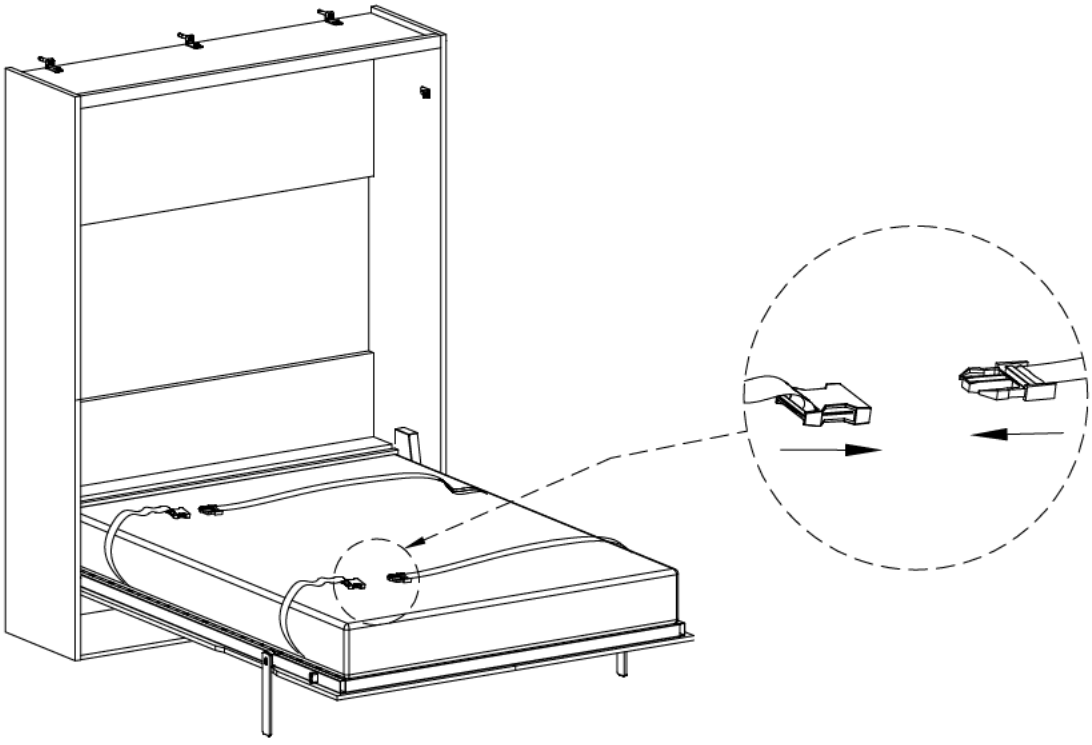

Assembly Instructions

Step 38

