DOIN-30in

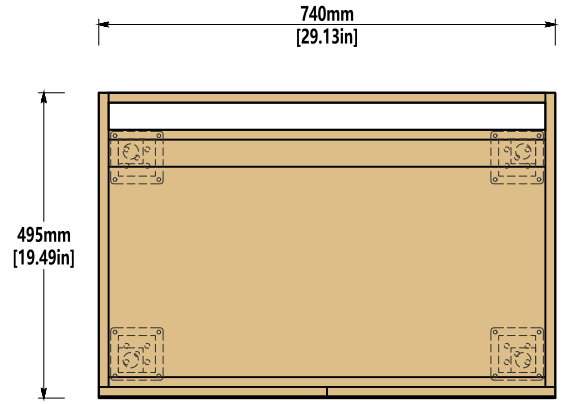

Top view of the cabinet body

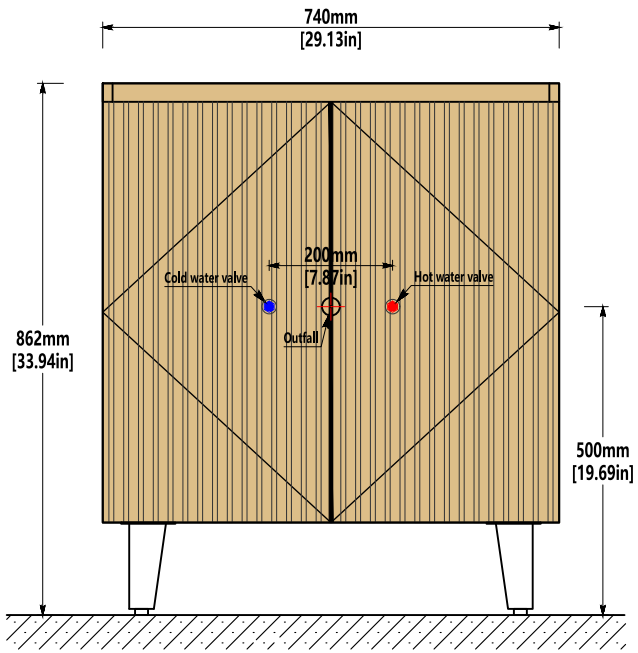

Front view of the cabinet body

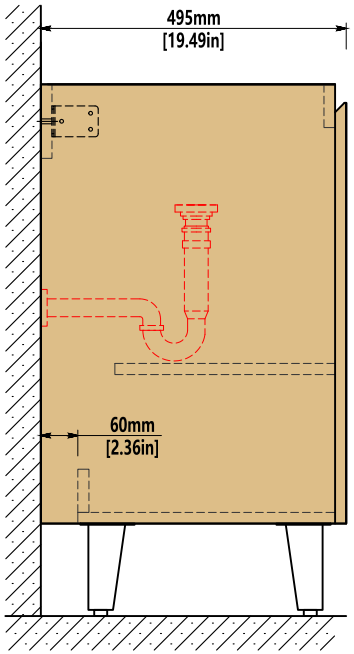

side view

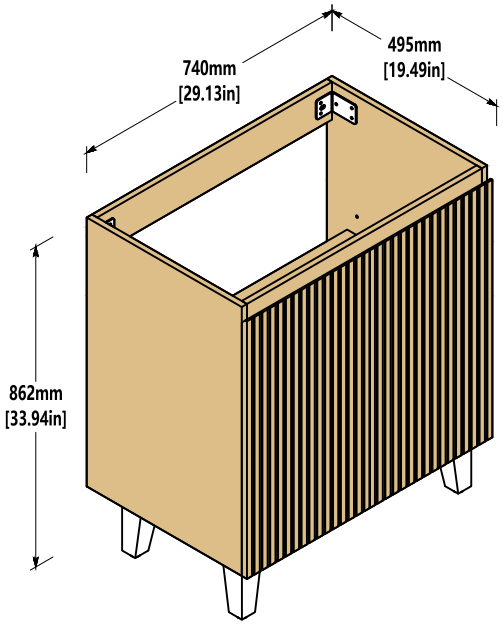

front view