ASSEMBLY INSTRUCTION
SKU CODE: BSW09100

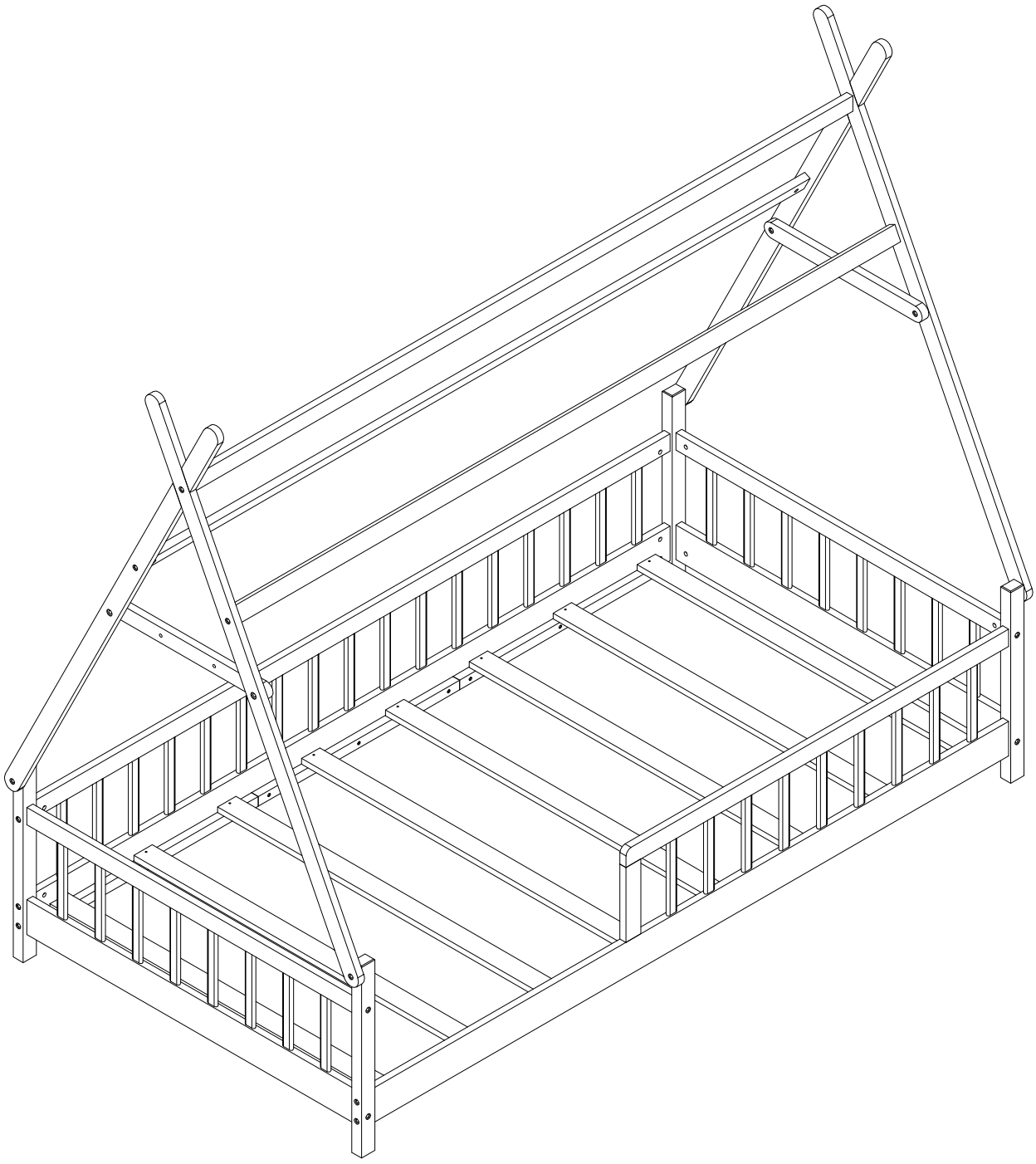

ASSEMBLY INSTRUCTION

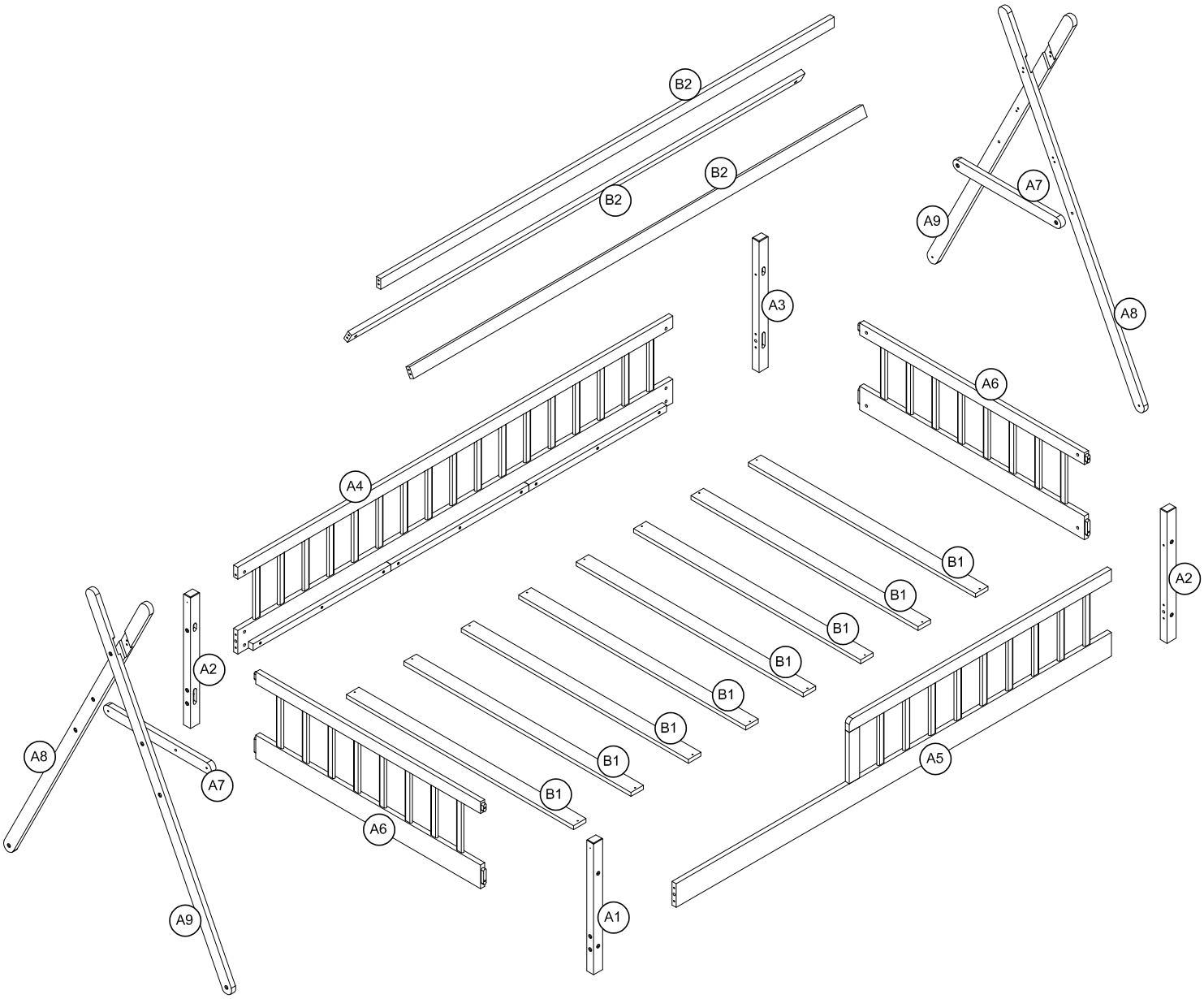

Part List (BSW09100)

A1 Leg-1pc 	A2 Leg-2pcs 	A3 Leg-1pc 
A4 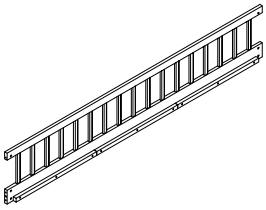 Back frame-1pc	A5 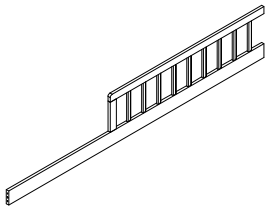 Front frame-1pc	A6 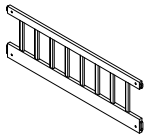 Side frame-2pcs
A7 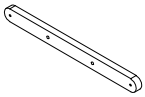 Wood bar-2pcs	A8 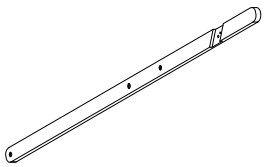 Wood bar-2pcs	A9 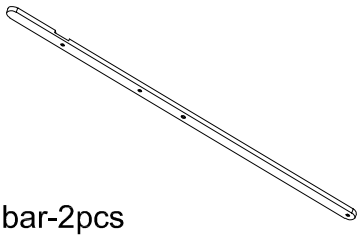 Wood bar-2pcs
B1 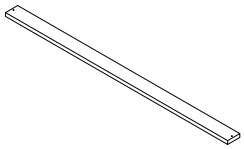 Slats-8pcs	B2 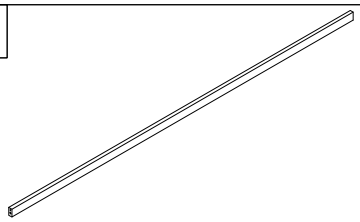 Wood bar-3pcs	B3 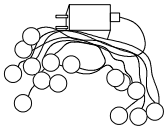 Round bulb string lights-1pc

Hardware List (BSW09100)

1 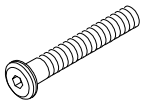 Bolts Ø1/4" x80 mm - 25pcs	2 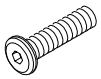 Bolts Ø1/4" x30 mm - 4pcs	3  Sleeve nut Ø1/4" x13 mm - 4pcs
4 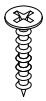 Wood Screws M4x30mm - 16pcs	5 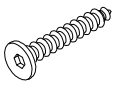 Screws 1/4" x40mm - 4pcs	6  Barrel Ø1/4" x15 mm - 25pcs
7  Wood dowel Ø6x30 mm - 6pcs	8 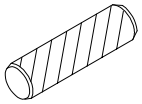 Wood dowel Ø10x40 mm - 4pcs	9 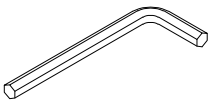 Allen Key - 2pcs

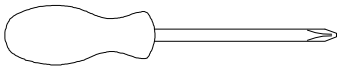

Assembly Tools Required (Not Included)

Step 1:

1	6
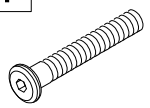	
4(pcs)	4(pcs)

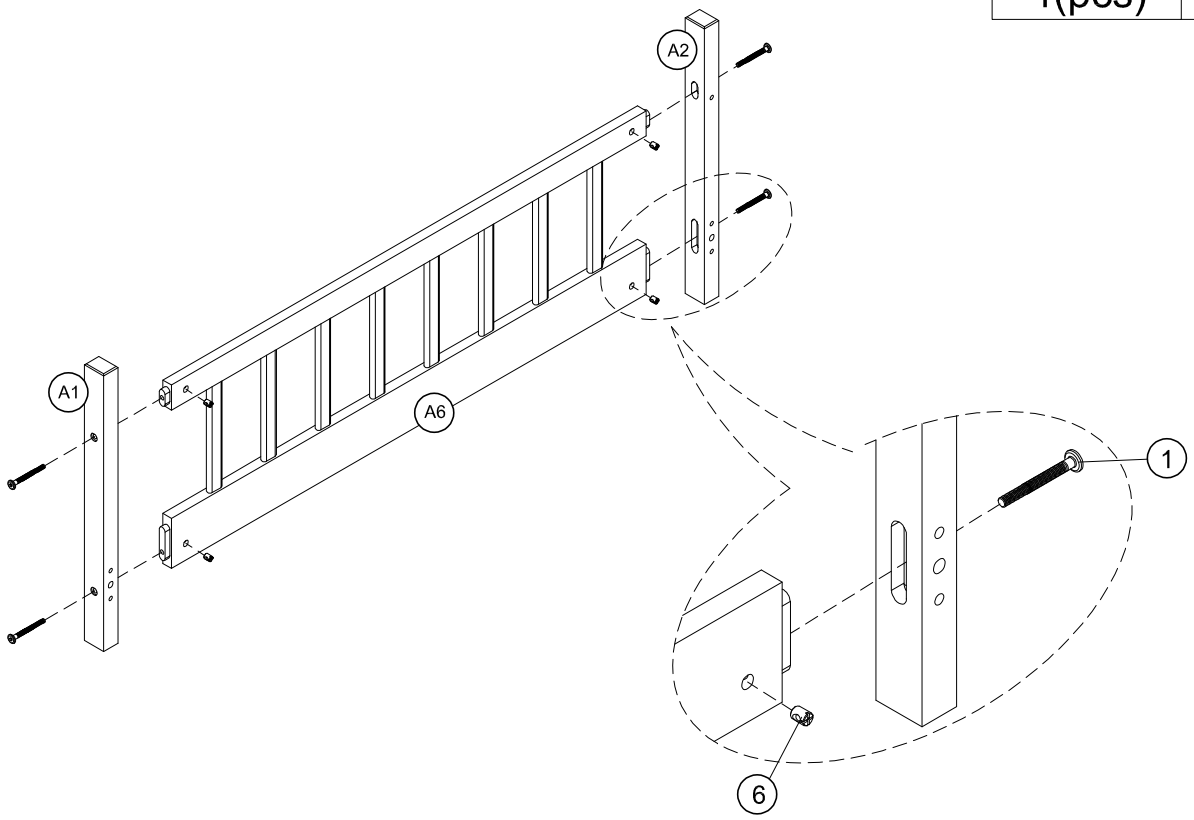

Step 2:

1	6
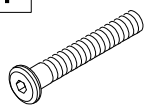	
4(pcs)	4(pcs)

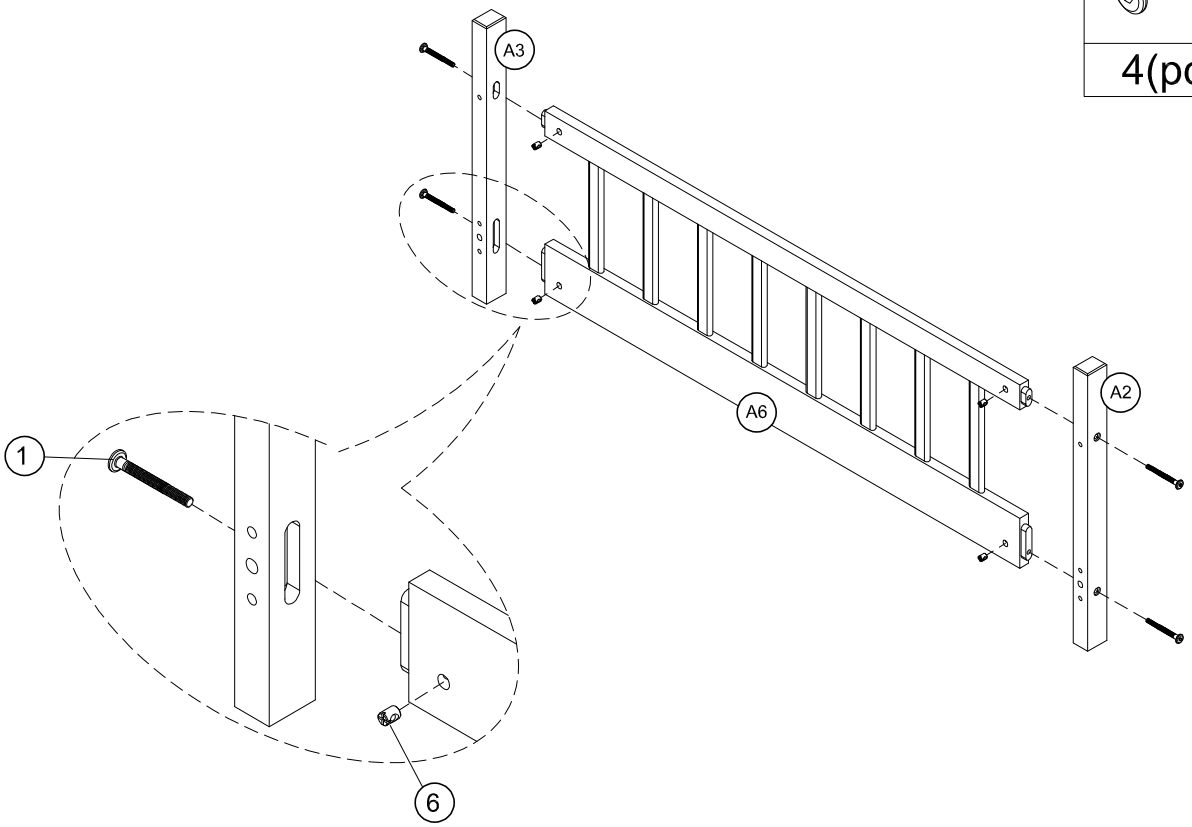

05/09

1	8
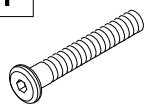	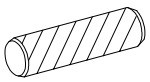
11(pcs)	4(pcs)

6

11(pcs)

Step 3:

Step 4:

4

16(pcs)

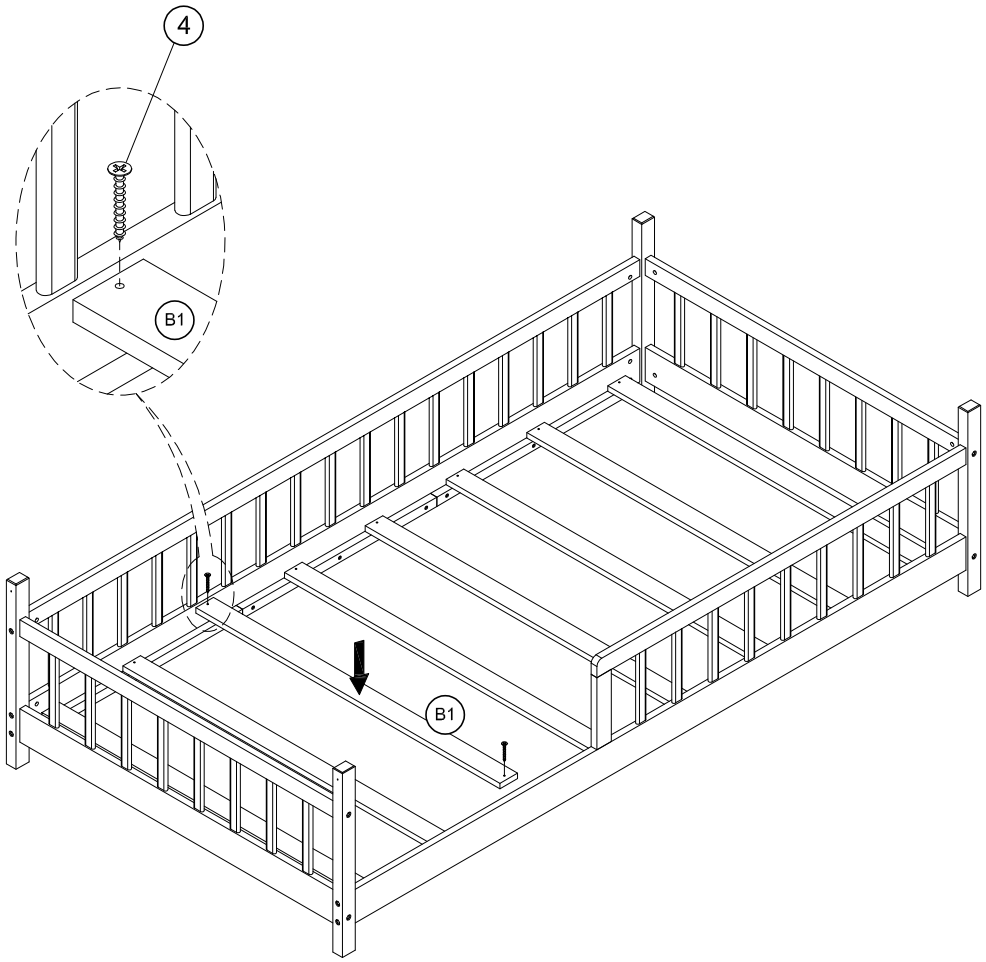

06/09

Step 5:

2	3
2(pcs)	2(pcs)

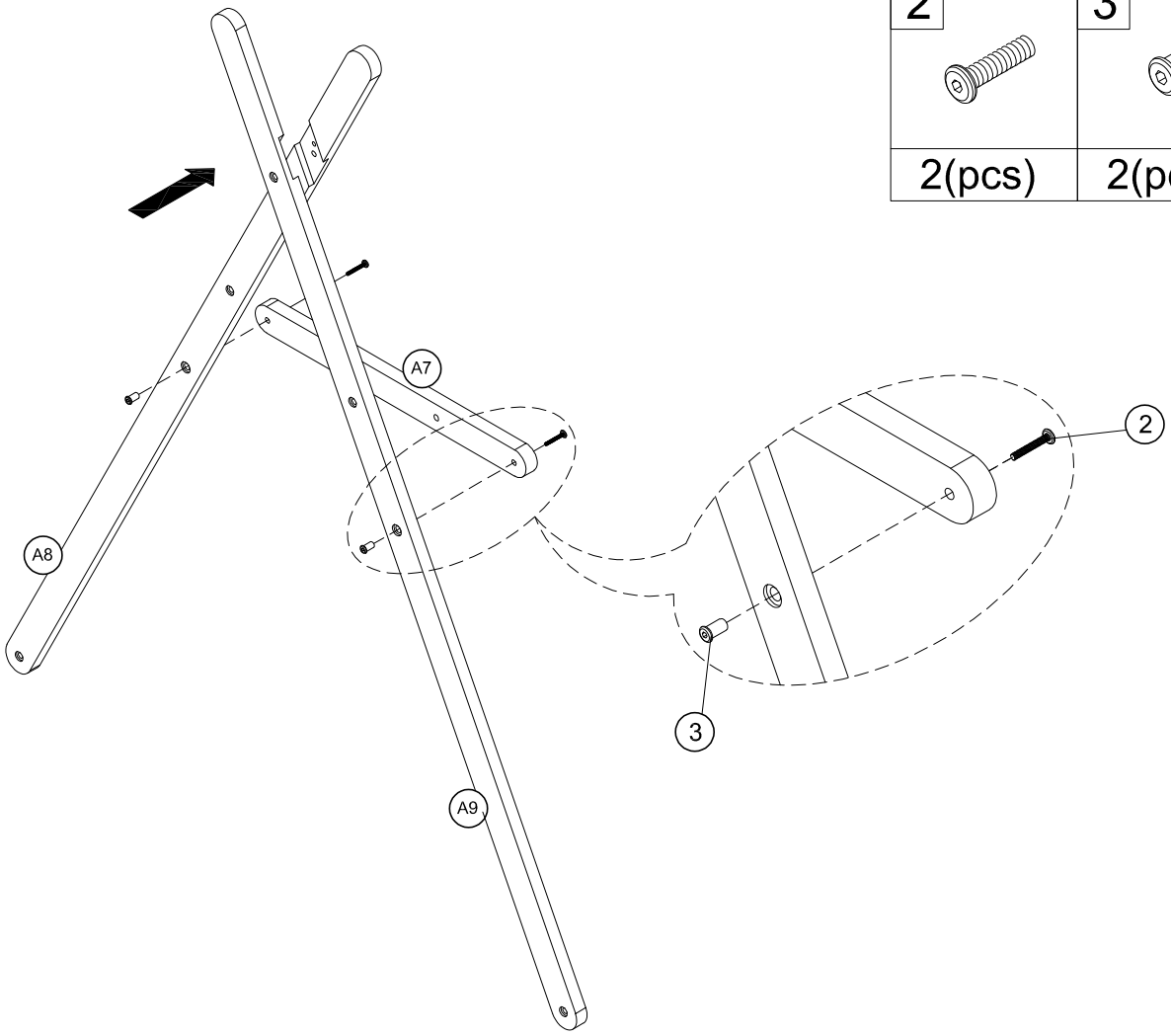

Step 6:

2	3
2(pcs)	2(pcs)

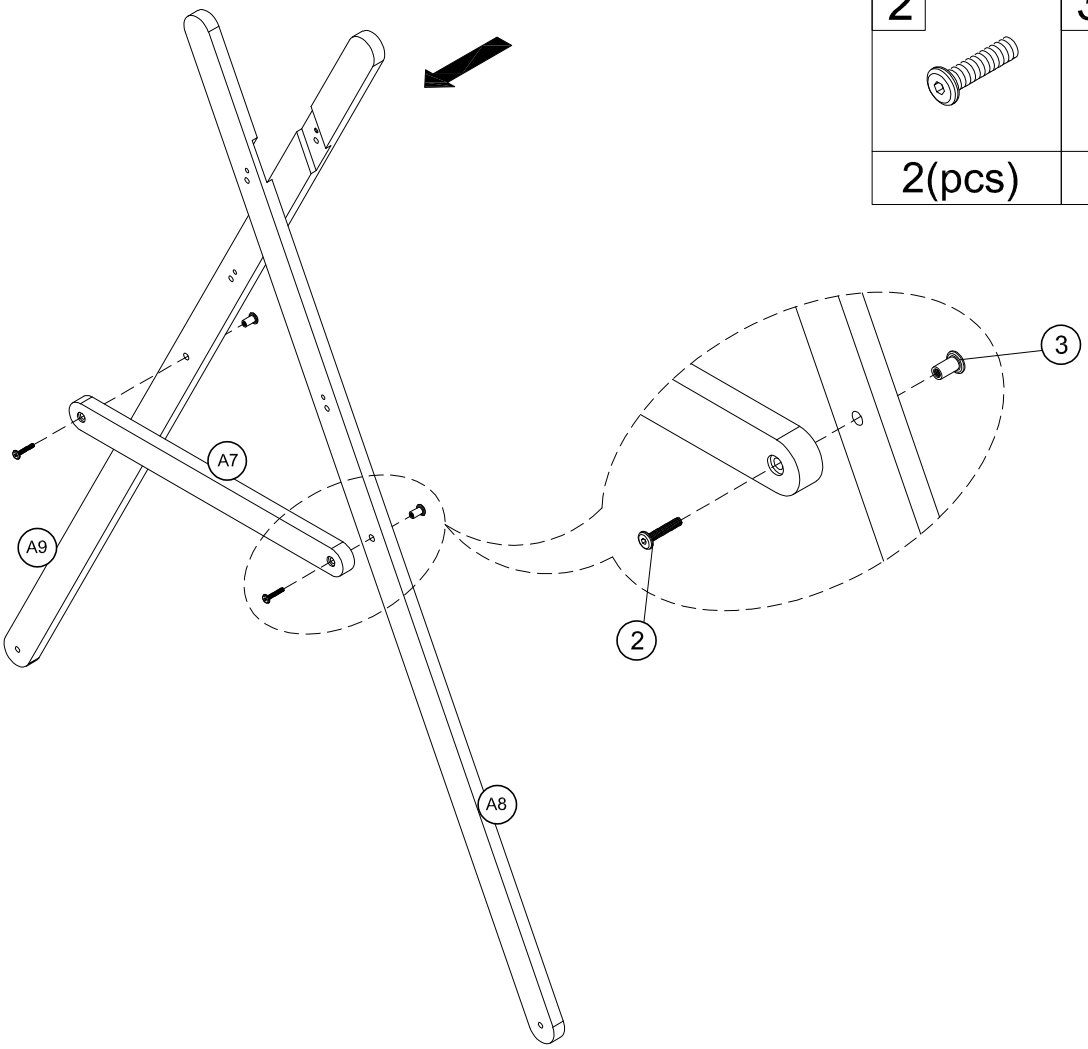

Step 7:

1	5	6
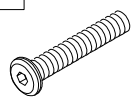	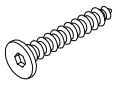	
6(pcs)	4(pcs)	6(pcs)

7

6(pcs)

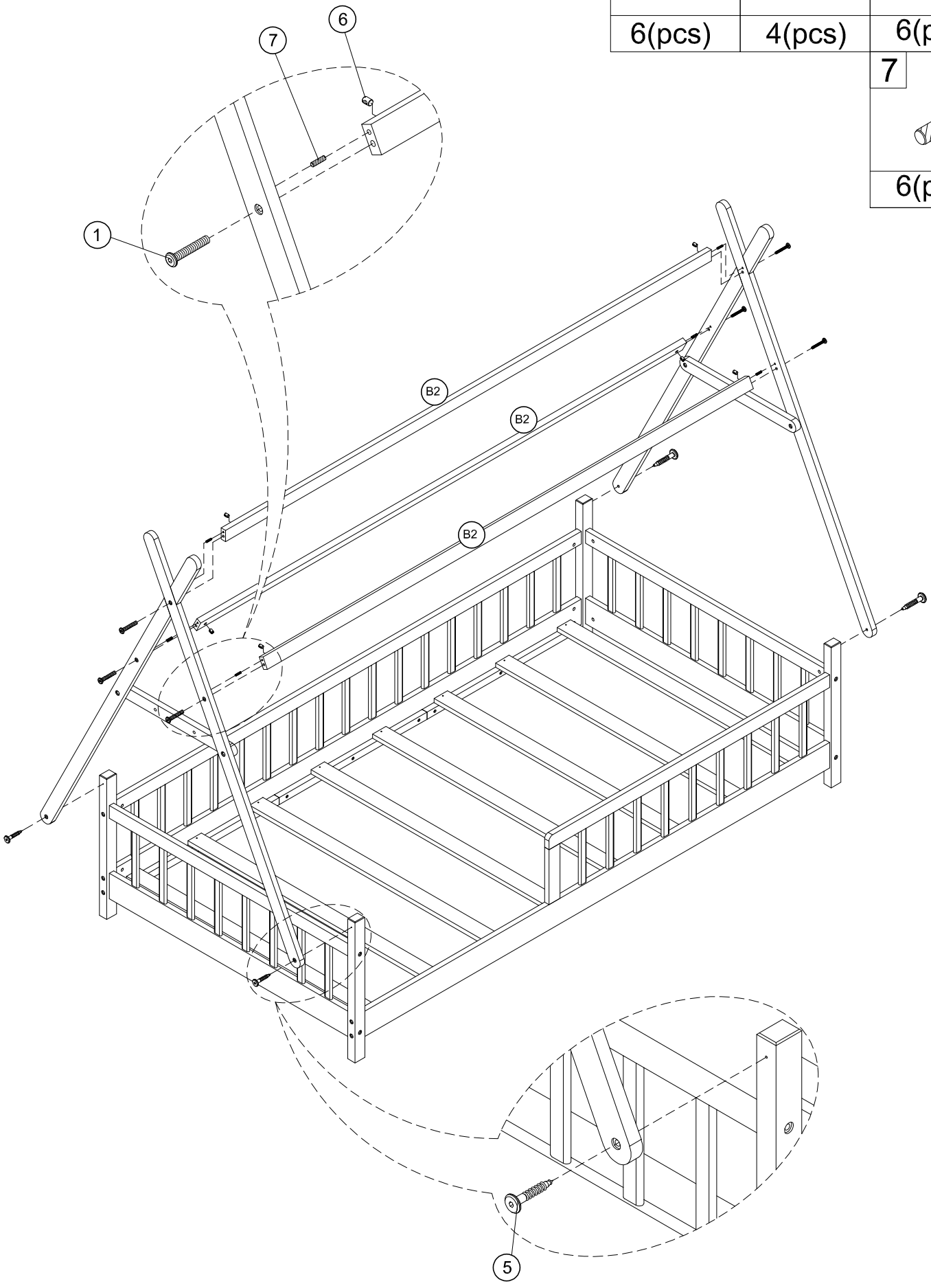

08/09

Step 8:

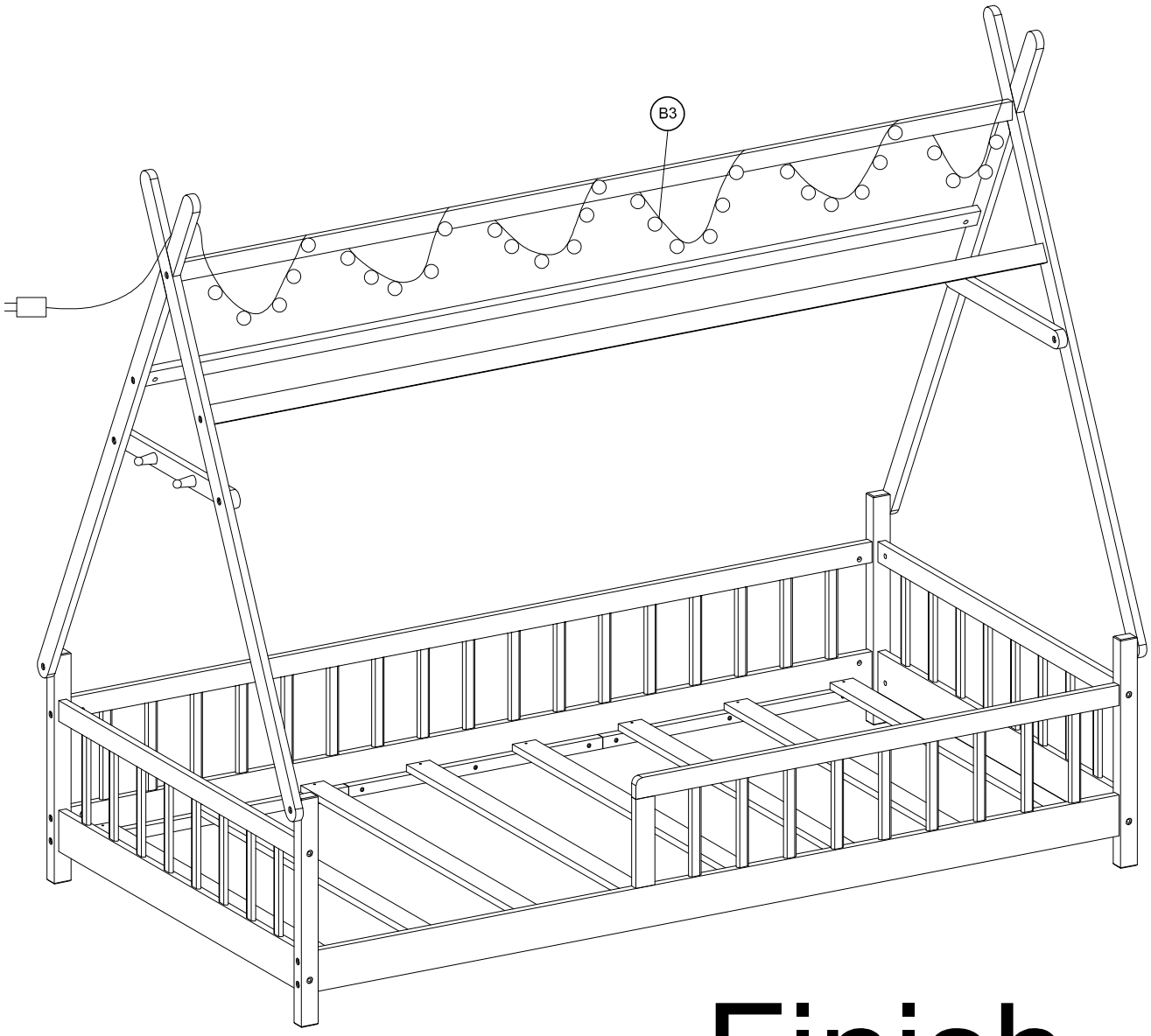

Finish