FEATURES

- Square sink cutout
- Single and widespread faucet

INCLUDED PRODUCTS

- Vanderloc® Rectangle Sink (White Porcelain)
- Sink mounting hardware (screws)

MATERIALS

- Silestone® Quartz

CODES & STANDARDS

- N/A

INSTALLATION

- Vanity top
- Single faucet hole
- Vanderloc® Rectangle Sink

VANDERLOC® ONE-YEAR LIMITED WARRANTY

- For product warranty information visit www.vanderloc.com/policies

TECHNICAL DRAWINGS

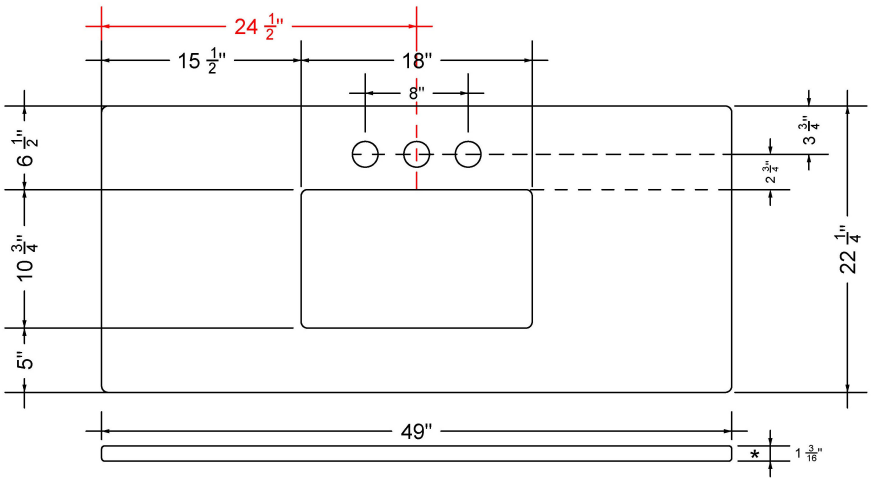

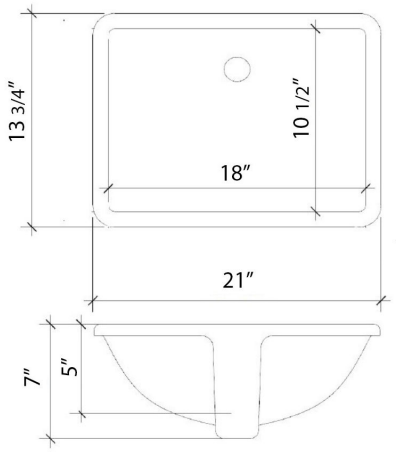

Vanderloc® reserves the right to make revisions without notice to product specifications. All product dimensions are nominal. For the most current specification sheet, visit www.vanderloc.com.