Model: CYBERPIT-ONE-PRO-B/CYBERPIT-PRO-SL-B/CYBERPIT-PRO-SL-SS

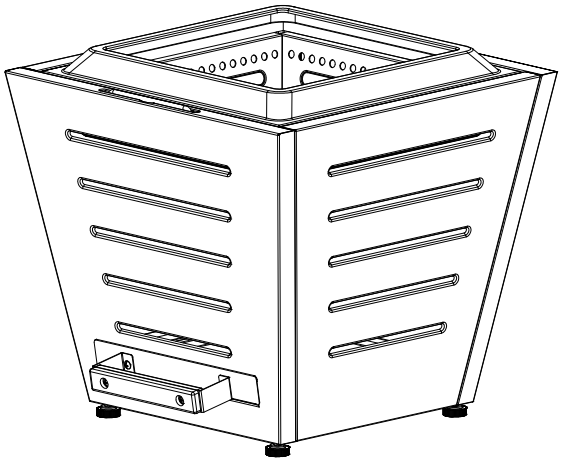

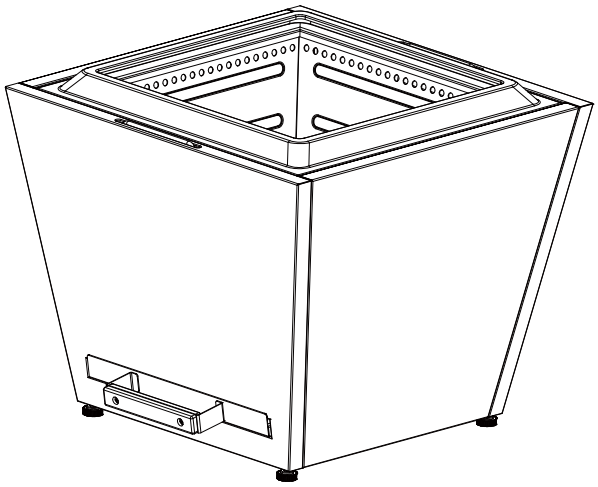

INSISTS ON THE HIGHEST STANDARD OF QUALITY IN MANUFACTURING.

IN CASE OF ANY ISSUES DO NOT RETURN .

If instructions or parts are missing, contact 800-305-8803, 8am-4pm(CST), Monday to Friday or email at service@legacy-heating.com

Table of contents

Safety 2
Assembly 4-7
Lighting 8
Extinguishing 9
Care & Maintenance 10
Frequently Asked Questions 11

Fire Pit safety

⚠**WARNING:** DO NOT use this Fire Pit until you have read the operating instructions and safety warnings. Failure to do so can cause death, serious injury or property damage.

- FOR OUTDOOR USE ONLY. Toxic carbon monoxide fumes can accumulate and cause asphyxiation.

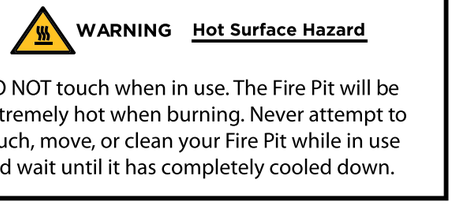

- DO NOT operate, light, or use the Fire Pit any closer than within 15 ft. of walls, structures or buildings, or other combustible materials such as dry grass/bushes, awnings, etc.
- DO NOT use under a patio roof, low hanging branches, trellises, or overhangs of any kind including covered porches.
- DO NOT use the Fire Pit in any explosive environment such as areas where flammable or combustible gases may be present.
- DO NOT use the Fire Pit with fuel sources other than the Wood Pack or natural cut firewood.
- DO NOT use an electric style grill starter. Use only matches or lighters which will provide a flame and then can be extinguished and moved away from the flame once the fire is ignited.
- DO NOT use gasoline, kerosene, diesel fuel, lighter fluid, alcohol, or any other flammable liquid to light or relight the Fire Pit.

⚠ WARNING: Cancer and Reproductive Harm-www.P65Warnings.ca.gov

- DO NOT store or use gasoline or any other flammable vapors, liquids, or materials in the vicinity of the Fire Pit.
- DO NOT store or use LP cylinders within 30 ft. of the Fire Pit while it is in operation.
- DO NOT use the Fire Pit on or near automobiles, trucks, vans, recreational vehicles, or boats.
- DO NOT place on any combustible surface such as wood, dry grass, leaves, mulch, etc.
- Only operate under the supervision of an adult.
- Keep clothing, hair and face away from flame when lighting.
- DO NOT lean over the Fire Pit when lighting or when it is in use.
- DO NOT breathe smoke from the fire and avoid getting smoke in your eyes.
- DO NOT use the Fire Pit while under the influence of drugs or alcohol.
- DO NOT leave the Fire Pit unattended, do not leave children or pets unattended near Fire Pit, and/or DO NOT leave a lit or hot Fire Pit unattended.
- Flames may reach a height of 3 ft. from the top of the Fire Pit.
- DO NOT use the Fire Pit in windy conditions.
- When using the Fire Pit, exercise the same precautions you would with any open fire.
- Never leave the Fire Pit unattended until the flames go out.
- DO NOT use water to extinguish the fire under normal circumstances as this could cause damage to the Fire Pit. Only extinguish with water during emergencies.

Fire Pit safety (cont.)

- DO NOT cover the Fire Pit with the cloth cover until it has completely cooled down approximately 12 hours.
- Always use the Fire Pit in accordance with all applicable local, state, and national codes. Contact your local fire department for details.
- DO NOT alter or modify the Fire Pit in any manner.
- The Fire Pit should be inspected and cleaned after every use.
- Be sure to wait 4 hours after the fire is out to lift the handle and carry the fire pit, while wearing protective clothing/gloves to prevent injury.

Wood Pack safety

⚠**WARNING:** DO NOT use Wood Packs until you have read the operating instructions and safety warnings. Failure to do so can cause death, serious injury or property damage.

- Wood Packs contain petroleum distillates.
- This size Wood Pack is intended for outdoor use only. The Wood Pack is combustible.
- Keep out of reach of children and pets.
- Pellets are not intended for animal or human consumption. Consuming these pellets can cause sickness, serious illness, or death.
- If swallowed DO NOT induce vomiting, and contact poison control, a physician or local emergency services.
- Store the Wood Pack in a cool, dry, and well-ventilated area.
- Store away from flame or direct heat source, or anything that may puncture the bag.
- For Fire Pit use only. Not intended for grills, smokers, pellet burners, stoves, or any other enclosed burning system.
- DO NOT add additional Wood Packs until the flame reduces below the top rim of the Fire Pit.
- Never leave fire unattended.
- Disposal of Ashes—Once the unit has cooled down, ashes should be placed in a metal container with a tight-fitting lid. The closed container of ashes should be placed on a non-combustible floor or on the ground, well away from combustible materials, pending final disposal.
- When the ashes are disposed by burial in soil or otherwise locally dispersed, they should be retained in the closed container until all cinders have thoroughly cooled.
- The poker should not be used when there is a flame while burning, it will burn the hand. After the fire is out, the burned wood can be stirred with a poker for full combustion.

Assembly

⚠**CAUTION:** Some parts may contain sharp edges. Wear protective gloves (not included) when assembling, moving, or handling product.

Part	Description		Quantity
A	Front panel		1
B	Left panel		1
C	Back panel		1
D	Right panel		1
E	Ash tray		1
F	Wood tray ring		1
G	Cover plate		1
H	Wood tray		1
I	Cover		1
J	Poker		1
K	Adjusting foot pad		4
L	heat insulation panel		1

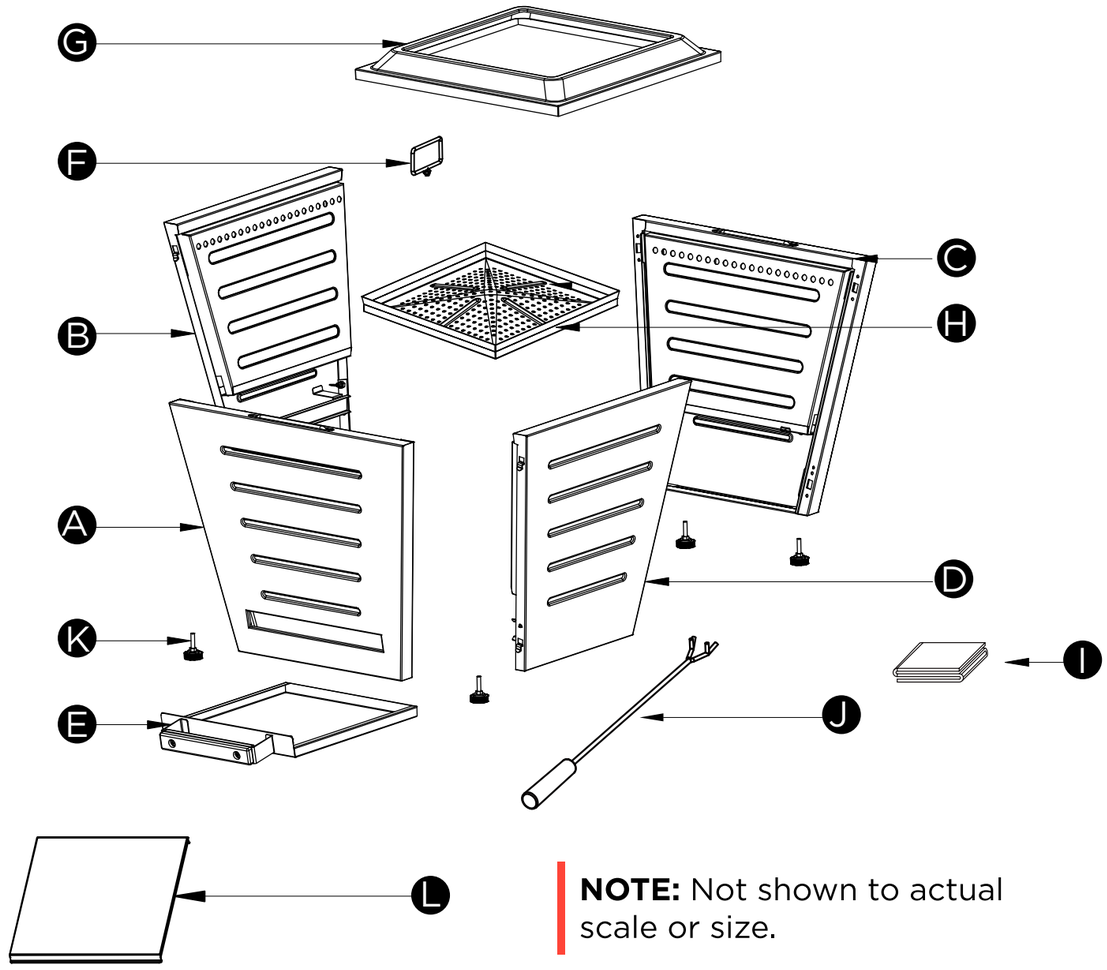

NOTE: Not shown to actual scale or size.

Assembly

⚠**CAUTION:** Some parts may contain sharp edges. Wear protective gloves (not included) when assembling, moving, or handling product.

STEP 1

Screw the 4 adjusting foot pads into the front panel(A) and back panel(C).

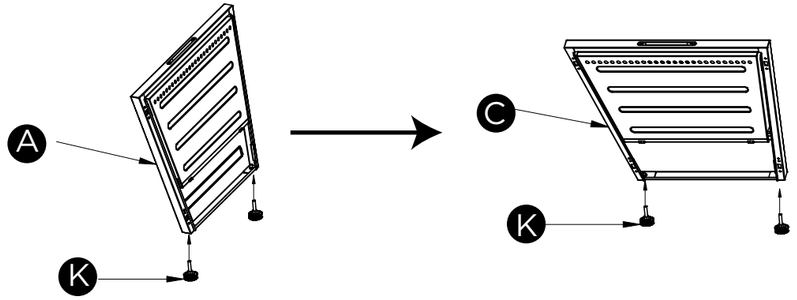

STEP 2

Attach the back panel(C) to the left panel(B). And Attach the left panel (B) to the front panel (A). Thirdly attach the right panel(D) to the panel (C) and panel (A). Make sure all hooks inserted into the rectangle holes and pins insterted into the holes as well.

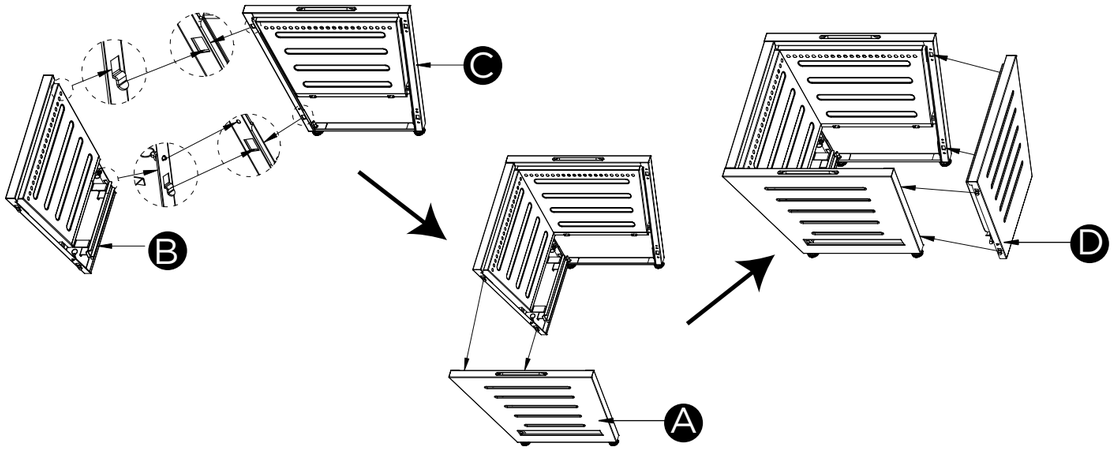

STEP 3

Put heat insulation panel(L).

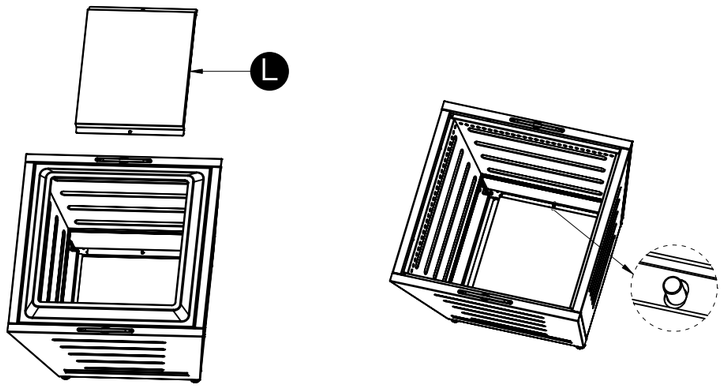

STEP 4

Screw off the nut from the wood tray handle(F) and assemble this handle to wood tray(H),then put it into the fire pit body.

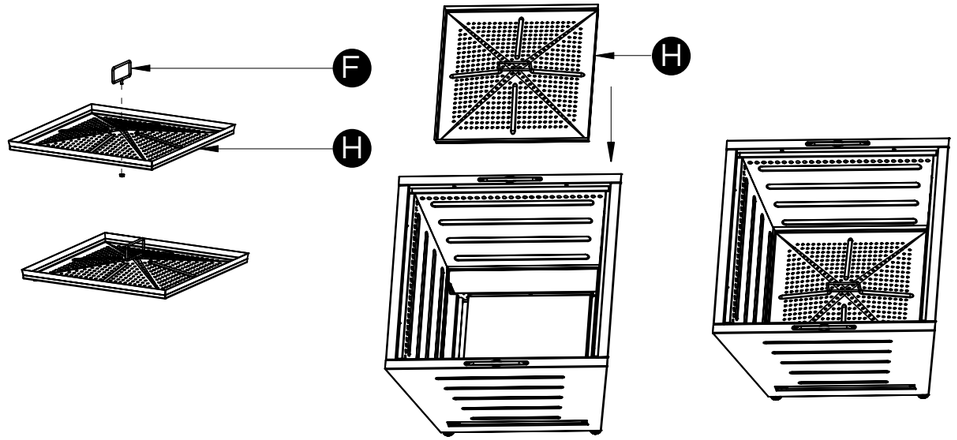

STEP 5

Put cover plate (G).

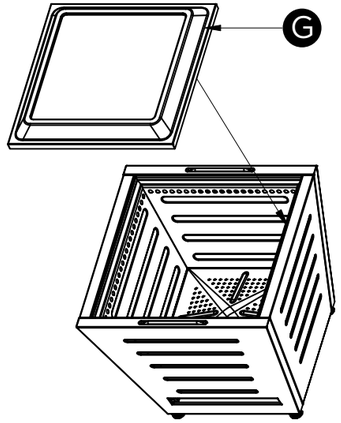

STEP 6

Put ash tray (E) to the tray hole.

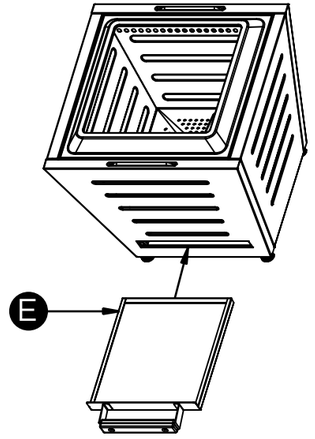

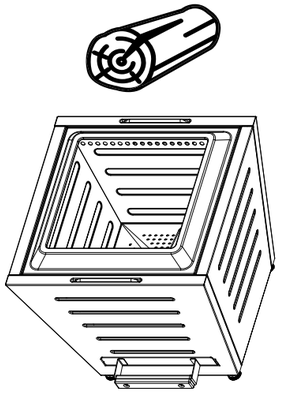

Light your Fire Pit using natural cut firewood

- Stack kindling, newspaper, a commercially-available fire starter in the center of the Fire Pit.
- Build larger pieces of wood around the fire starter.
- Ignite the kindling, newspaper, or fire starter with a match. Use with caution as these ignitable materials could catch fire quickly and could cause burns if your hand is too close to the fire.
- DO NOT use lighter fluid to light the natural cut wood. Logs should be less than 11.8inch in the length for 20inch fire pit.Logs should be less than 15.7inch in the length for 25in fire pit. DO NOT use any flammable fluids (gasoline, lighter fluid,etc.) to light or relight fires. Doing so could cause serious injury and lead to the fire getting out of control.

Extinguishing

The safest and preferred method for extinguishing a fire is to wait it out and allow the fire to burn out naturally. This method takes the longest but results in the least amount of smoke, less mess, and the best experience. To ensure the fire goes out competely, NEVER leave the Fire Pit unattended.

Only in the case of an emergency should you use a garden hose and water:

> **NOTE:** If no garden hose is available, you can pour water over the Fire Pit. Use caution as this generates a significant amount of steam and smoke. You can also use sand or a dry chemical extinguisher that is specified for wood fire applications.

- Stand back at least 5 ft. while spraying to avoid the hot steam and debris.
- Spray the coals and inside the Fire Pit continuously for 5 minutes or until there is no visible flames and steam has dissipated.
- Using your fire poker (sold separately), stir remaining contents to ensure no hot coals or flames remain. Spray an additional 5 minutes if flames persist.

Care & maintenance

> ⚠**CAUTION:** Allow the Fire Pit to cool for at least 12 hours before performing any cleaning or maintenance. Some parts may contain sharp edges. Wear protective gloves when moving or handling product.

With proper care, you can improve the efficiency and performance of your Fire Pit and prolong its life. Here is how you should care for your Fire Pit:

- **Cover during periods of inactivity.** Cover the Fire Pit after the Fire Pit has completely cooled.
- **Use 2 people to move the Fire Pit.** when empty and is dangerous to move with 1 person.
- **Clean out ash regularly after Fire Pit has cooled completely.** Cleaning regularly will help maintain airflow and reduce smoke. Carefully brush the left-over ash through the grate and into the ash tray. Remove the ash tray and dispose of the ash and debris properly. Wood ash mixed with water creates a basic (alkaline) solution which can affect finishes and stainless steel.

  You should always use metal containers for ash disposal. Never leave the ash container on a combustible surface.

  DO NOT use or dispose of ash in a garden or landscape application unless you review local laws and ordinances.
- **Clean the Fire Pit with dish soap or baking soda.** Rinse clean with water. Thoroughly clean the top of the Fire Pit if you notice any residue. DO NOT use oven cleaner or abrasive cleaners as they will damage the finish. Thoroughly dry the Fire Pit with a soft cloth to prevent rust from forming.

Frequently asked questions

Can I use firewood in the Fire Pit?
Yes. Never use “green” wood. For example, freshly cut wood from a live tree (cut less than six months prior to each use.). The moisture content is too high and will result in smoke and incomplete combustion. Logs should be less than 16 in. in length. At least one portion of every log should be touching the bottom of the flame basin for maximum stability. Approximately 3 standard split cord wood logs should fit. Never add flammable or combustible liquids to the Fire Pit after ignition. This could lead to flare ups in the ash pan and flame basin.

Can I add more than one Wood Pack?
Avoid adding a second Wood Pack until the flames stop reaching above the top of the Fire Pit. Adding a second Wood Pack too early reduces your total burn time. The Wood Pack burns with a flame for approx. 30 min.

Can I control the flame height?
The Wood Pack is designed to maintain a full and consistent flame for approximately 30 minutes. If you desire more control over the flame size you can use wood logs and add more or less based on preference.

When should I add another Wood Pack or firewood?
When the flames stop reaching above the top of the Fire Pit, add another Wood Pack or firewood to continue burning with a brilliant flame.

Do I need lighter fluid or newspaper to start the Wood Pack?
No, simply light the bag in each corner to start the fire.

How do I clean the Fire Pit?
If soot or ash has accumulated on the outside of the Fire Pit, once the Fire Pit is completely cool, wipe down with a damp cloth. Rinse with clean water and use dish soap or baking soda. DO NOT use any abrasive cleaners as they will damage the finish. Once you’ve removed all residue, dry with a soft cloth to prevent any rust from forming.

How long do I have to wait before I put the cover on?
If using the Wood Pack, this should take approximately 12 hours and is designed to completely consume leaving minimal ash. If you are using wood logs, times will vary depending on the amount of wood used and consumed. Be sure to clean out all ash, taking appropriate safety measures, to ensure there are no embers left over before putting the cover on.

Where can I put my Fire Pit?
The Fire Pit should not be used closer than 15 ft. to any walls, structures or buildings, and should not be placed on any combustible surface such as wood, dry grass, leaves or mulch. Flames may reach a height of 3 ft. above the top of the Fire Pit. Further, the Fire Pit should not be used under a patio roof, any low hanging branches, trellises or overhangs of any kind, including covered porches. If used on a grassy area, you should have a non-flammable, heat resistant mat placed under the Fire Pit.

What are the best practices for storing my Fire Pit?
Keep the Fire Pit in a covered environment away from moisture. Keep it out of reach of children and pets.

How often do I need to empty the ash catcher pan?
The pan should be emptied after every use.

How do I clean out the ash from the bottom of the Fire Pit?
Remove the center cone and carefully sweep ash through bottom holes. Once all the ash has been swept through the holes, remove the ash pan and dispose of ash properly.