Notice:

1.Follow the installation instructions.Please confirm all accessories are preset before installation.

2. Do not fully tighten the screws during initial assembly.Fully tighten screws only once all pieces which are correctly assembled.

3.If you encounter any problems during installation,please contact our customer service.

4.Please unbox the item from the side with an open-label and put a carpet on the floor to avoid scratching it.

Item no.	Reference Image	Qty	Item no.	Reference Image	Qty
Ⓐ		X1	①		X6
Ⓑ	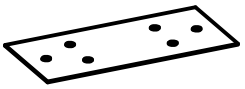	X1	②		X1

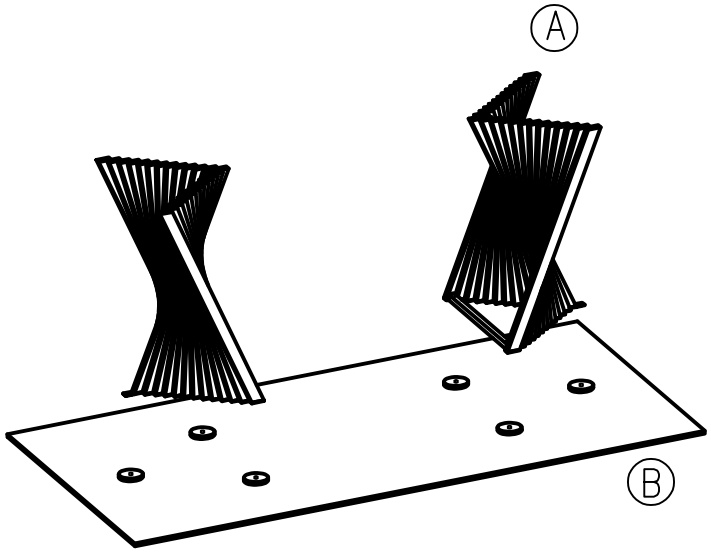

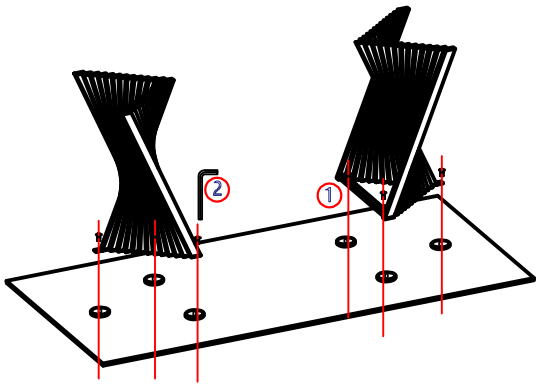

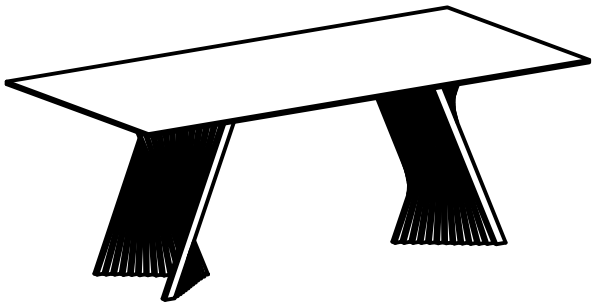

Installlation Completed

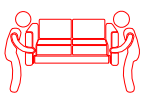

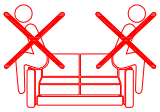

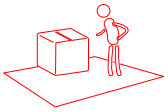



Notice:

Cpatibleosls : Sewdriver or Eeic Drilewdrriver(Not Include)



