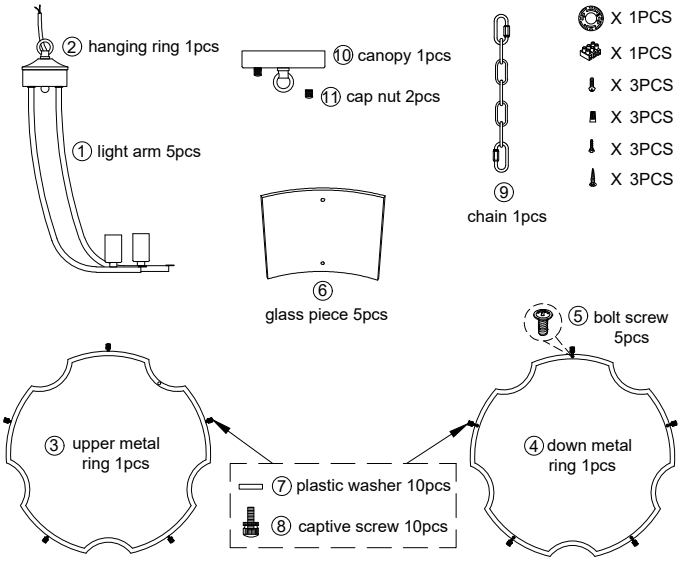


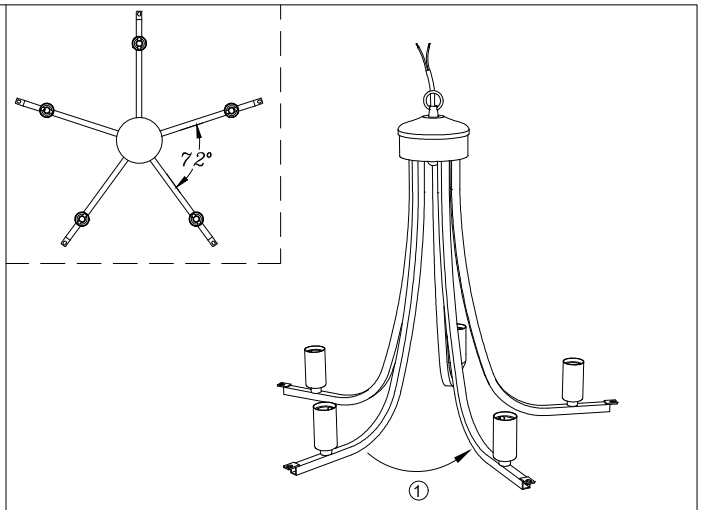


1.Adjust the light arms ① to suitable position like picture shown.

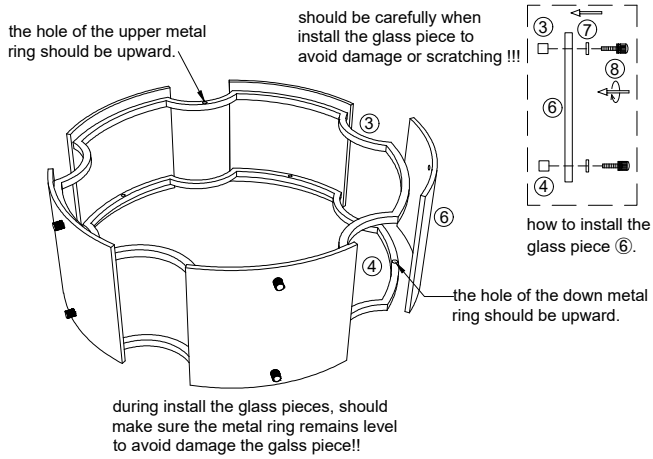


2.Install the glass piece to the up metal ring ③ and down metal ring ④ with plastic washer ⑦ and captive screw ⑧, don't tighten the screw ⑧ until all washer ⑦ and screw ⑧ are ready in the holes, rotate to fasten the screw ⑧ at last.（should be carefully when install the glass piece to avoid damage or scratching !!!)

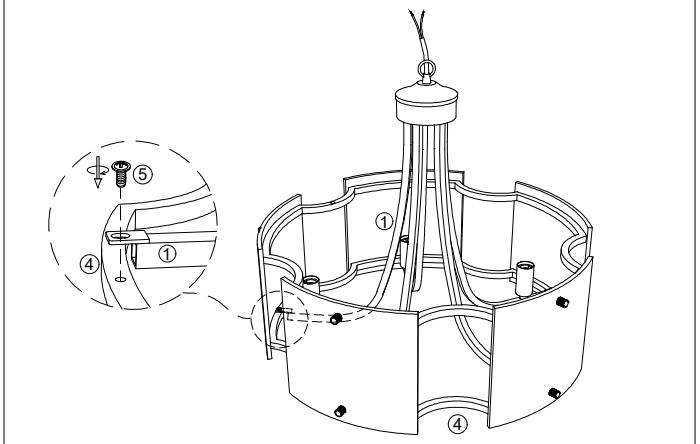


3.Install the glass lampshade to the arms of light fixture with bolt screw ⑤,don't tighten the screw ⑤ until all screws are ready in the holes, rotate to fasten the screw ⑤ at last.

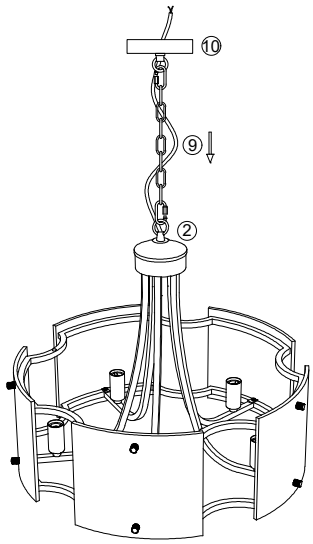


4.Hang the fixture to the canopy ⑩ with chain ⑨, let the wire go through the chain ⑨ and canopy ⑩.

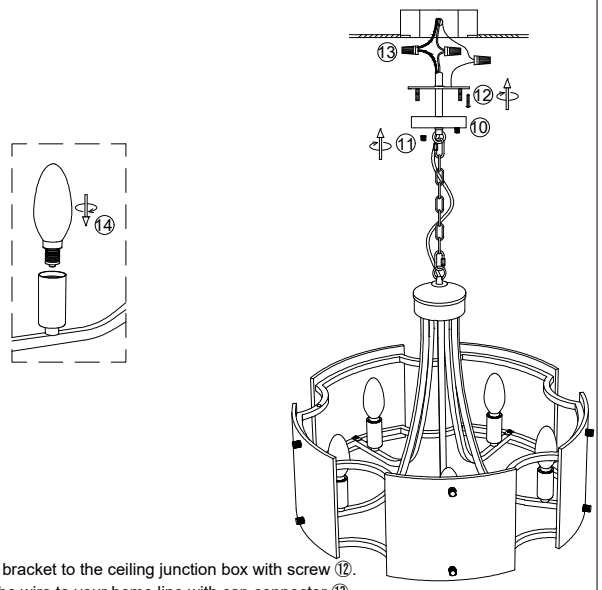


5.Install the bracket to the ceiling junction box with screw ⑫.
6.Connect the wire to your home line with cap connector ⑬.
7.Install the fixture to the bracket with cap nut ⑪.
8.Install the bulb ⑭.

Please read carefully before installation!!!
Note : Please make sure that the electricity is powered off during installation !
Only a professional electrician should install this kind of product !