INSTRUCTIONS MANUAL

PATIO SWIVEL CHAIR

Loosely assemble before tightening.

IF YOU PURCHASED THE PRODUCT ONLINE AND HAVE
ANY QUESTIONS OR CONCERNS
PLEASE CONTACT US VIA EMAIL,TEXT,OR PHONE

Warning:

1. Very important!

After receiving the product, please check if all parts are intact.

Do not open the vacuum-sealed packaging of the mat immediately.

Only proceed with opening the packaging if you are satisfied with the product.

2. When unpacking the box, please use tools carefully to avoid scratching the mat.

Note: Since the mat is vacuum-packed, if you are not satisfied with the product after opening, it may affect the after-sales process.

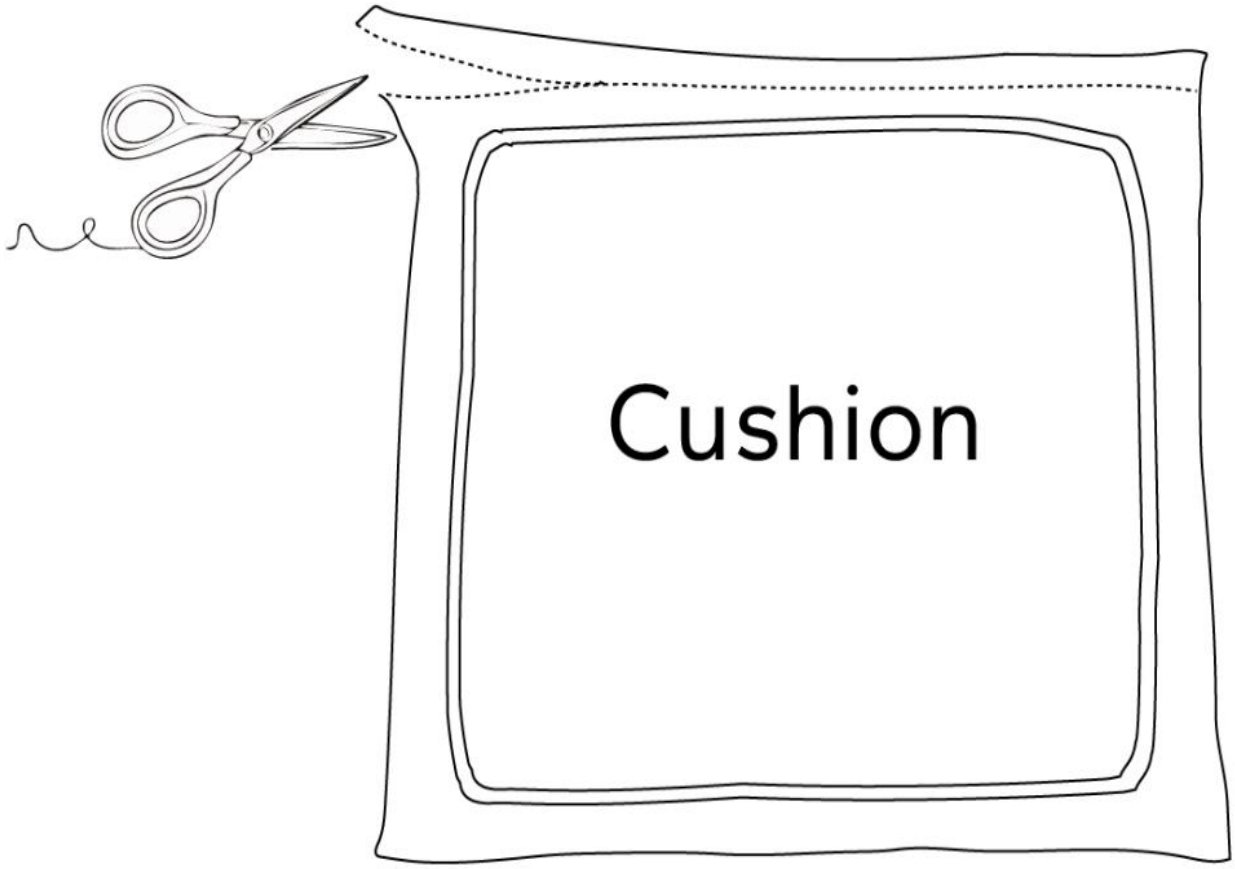

Warning and Cautions:

Thank you for choosing our furniture. Please read and understand this entire manual before attempting to assemble or install the product.

GENERAL BEST PRACTICES FOR ASSEMBLY

1. Familiarize yourself with the product and check all parts against the packing list. If any Parts are missing or damaged, do not install. Contact us immediately.

2. Some parts may contain sharp edges. Wear protective gloves, if necessary, during assembly.

3. Check all nuts and bolts periodically for tightness and, when required, tighten them again.

4. Pay attention to the parts orientation.

5. Save all packing materials until assembly is complete to avoid accidentally discarding smaller parts or hardware.

IMPORTANT

●Make sure to place the washer on the bolt before inserting it into the bolt hole.

●To ensure the best fit, assemble loosely before tightening.

●Tighten all bolts after all parts are assembled.

WARNINGS

⚠ **Keep children and pets away from the working area during assembly and adjustments.**

1. Keep the assembly area at least 6 feet from any obstruction, such as a fence, garage, house, overhanging branches, laundry lines, or electrical wires.

2. When assembling and using this product, always follow basic safety precautions to reduce the risk of personal injury and product damage. Please read all instructions before assembly and use.

3. Check all bolts for tightness before use. IMPORTANT - check and tighten bolts often to keep them secure!

4. The chair is not to be used for standing purposes and will not function as a stool or step-ladder. Use on even surfaces only.

5. The chair supports a weight of 350lb (159 kg). Improper use of this product or failure to use it as directed may result in injury. Not intended for commercial use.

WARRANTY

•WHAT IS COVERED?

•The limited warranty is extended to the original purchaser and covers material and manufacturing defect, provided the item is properly maintained and used for personal residential purposes only.

•Warranty: 180 DAYS.

•Lost Accessories or Parts Policy: Costs for lost accessories or parts will be charged after 90 days from the date of purchase.

MAINTENANCE

•**STAIN RESISTANT CUSHIONS CARE:** Keep cushions in storage on rainy days.

•**SPILLS:** Immediately wipe up spills using a white damp cloth. Repeat if necessary until the stain is gone. Allow cushions to air dry.

• **FABRIC CARE:** Hand wash with cold water, non-chlorine bleach when needed, and lay flat to dry. Cool iron if necessary. Do not dry clean.

• RESIN WICKER PRODUCT CARE:

1. General Cleaning: Before use, clean the product with a soft, dry towel. When not in use, wipe off any dirt or loose debris. For regular cleaning, use a mild soap and water solution, rinse thoroughly, and dry completely.

2. Weather Protection: To prolong the life of your resin wicker, avoid prolonged exposure to intense sunlight or heavy rain. Whenever possible, use a protective cover when the furniture is not in use, especially during extreme weather conditions.

3. Avoid Harsh Cleaners: Do not use strong detergents or abrasive cleaners, as these may damage the finish.

•**Regular Maintenance:** Over time, nuts and bolts may loosen. Occasionally check and re-tighten them on all products as needed.

Assembly Instructions for 1PC Swivel Glider

A	B	C	D
1PC Left Sofa Arm	1PC Right Sofa Arm	1PC Seat Panel	2PCS Sofa Side Panel

E	F	G	H
1PC Sofa Back	1PC Base	1PC Connecting Rod-Down	1PC Connecting Rod-Up

I	J	K	L
1PC U-shaped Fitting with 4PCS Swing Arm	1PC Swivel Plate	1PC Seat Cushion	1PC Back Cushion

SC4	SC6	SC8	SC31
M6*20mm 4PCS Bolts	**M6*30mm** 8PCS Bolts	**M6*35mm** 8PCS Bolts	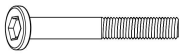 **M6*45mm** 4PCS Bolts

SC9	SC17	SC33	SC19
M6*40mm 10PCS Bolts	**Ø16*Ø6.5*1mm** 38PCS Washer	**Ø18*Ø6.5*1mm** 4PCS Washer	16PCS Spring Washer

SC20	SC30	SC1	
12PCS M6 Nut	1PC M6 Socket Wrench	1PC Allen Wrench	

Tools: SC29

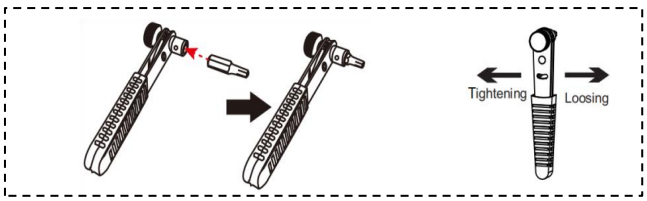

1.Secure the Left Arm (A) to assemled Sofa Back (E) with 2 Bolts (SC9), 2 Washers (SC33) and 2 Spring Washers (SC19), using an Allen Wrench (SC1). Ensure all bolts are loose to allow for alignment.

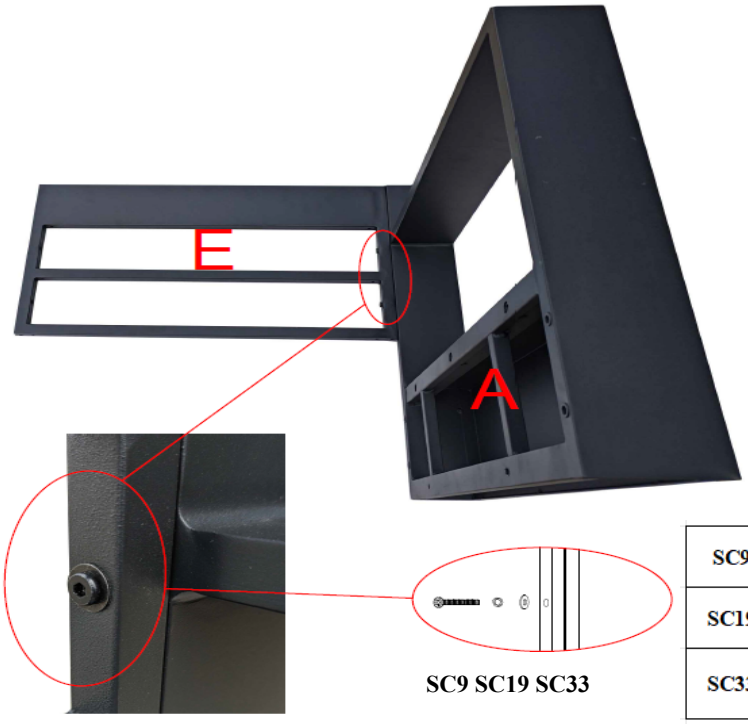

SC9 SC19 SC33

SC9		M6*40mm	2
SC19		Spring Washer	2
SC33		Ø18*Ø6.5*1mm	2

2.Secure the Left Arm (A) to assemled Sofa Side Panel (D) with 2 Bolts (SC6), 2 Washers (SC17), using an Allen Wrench (SC1). Ensure all bolts are loose to allow for alignment.

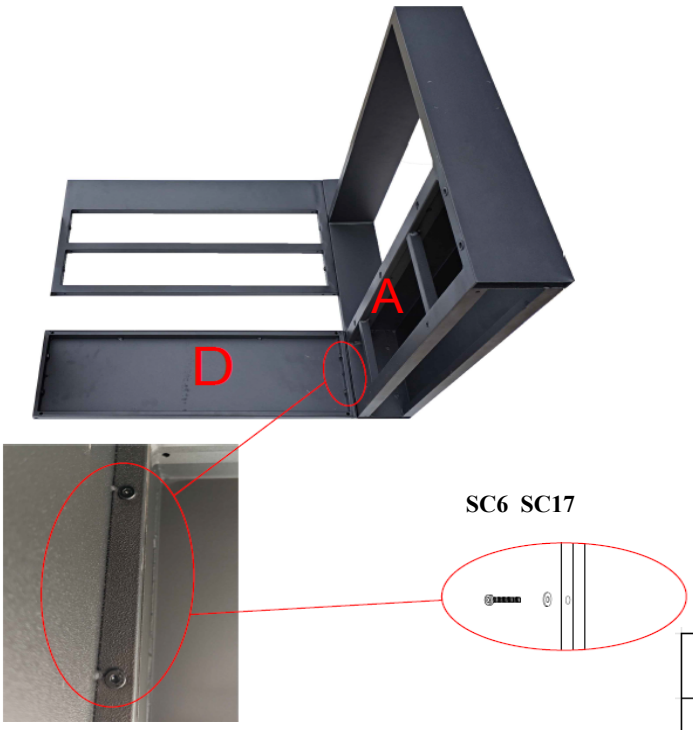

SC6 SC17

SC6		M6*30mm	2
SC17		Ø16*Ø6.5*1mm	2

3.Secure the Right Arm (B) to to assemled Sofa Back (E) with 2 Bolts (SC9), 2 Spring Washers (SC19) and 2 Washers (SC33); Secure the Right Arm (B) to assemled Sofa Side Panel (D) with 2 Bolts (SC6), 2 Washers (SC17), using an Allen Wrench (SC1). Ensure all bolts are loose to allow for alignment.

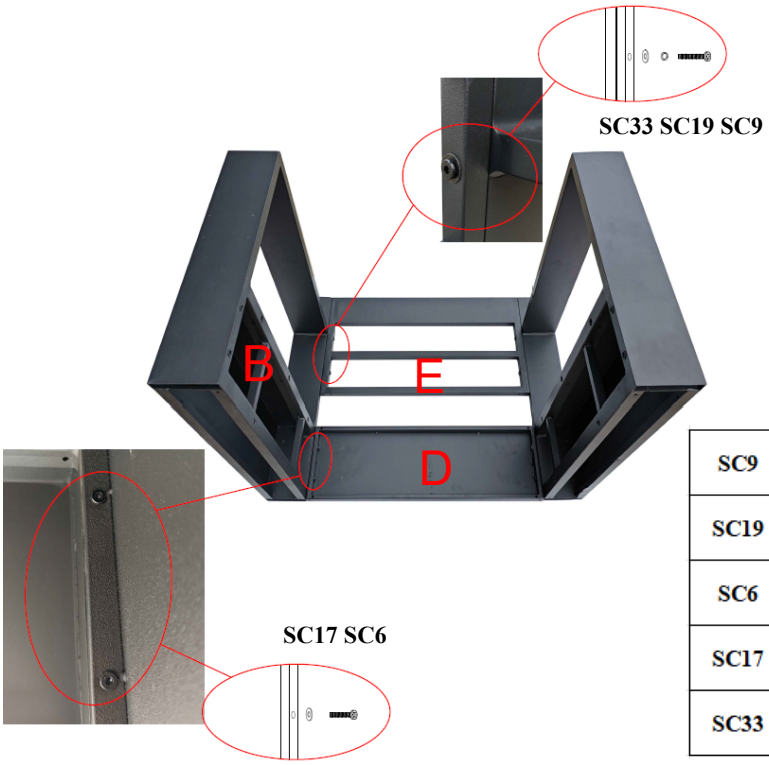

SC9		M6*40mm	2
SC19		Spring Washer	2
SC6		M6*30mm	2
SC17		Ø16*Ø6.5*1mm	2
SC33		Ø18*Ø6.5*1mm	2

4. Secure the Sofa Side Panel (D) to assemled Sofa Arm (A & B) with 4 Bolts (SC6), 4 Washers (SC17), using an Allen Wrench (SC1). Ensure all bolts are loose to allow for alignment.

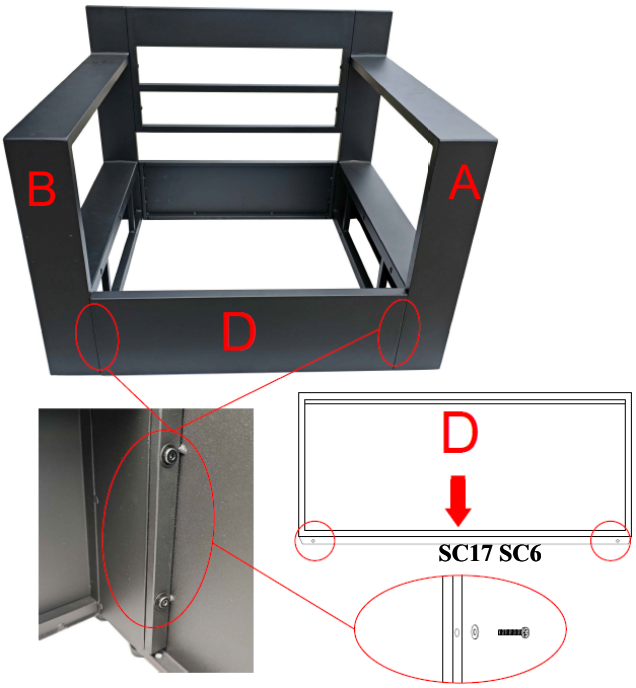

SC6		M6*30mm	4
SC17		Ø16*Ø6.5*1mm	4

5. Secure the Sofa Seat Panel (C) to assemled Sofa Arm (A & B) with 6 Bolts (SC9), 6 Washers (SC17), using an Allen Wrench (SC1). Ensure all bolts are loose to allow for alignment.

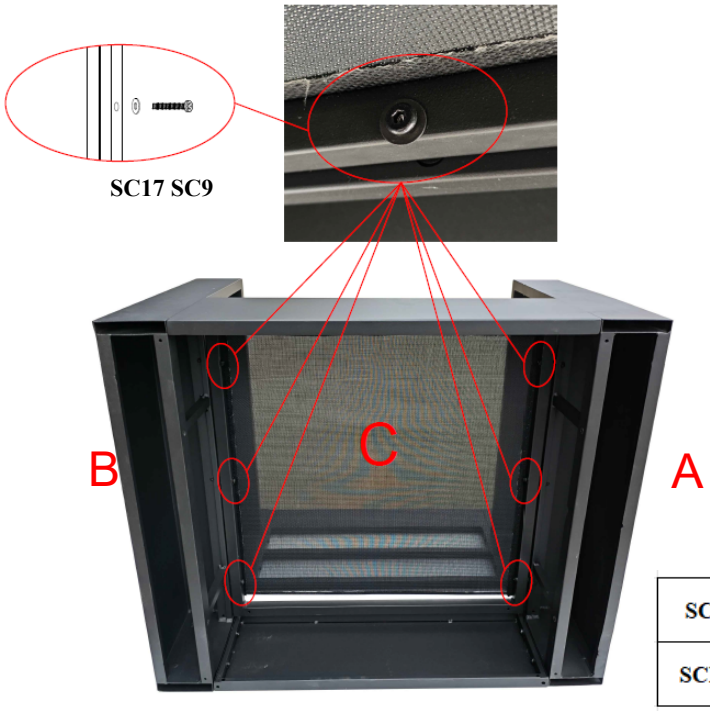

SC9		M6*40mm	6
SC17		Ø16*Ø6.5*1mm	6

6. Secure the Connecting Rod (G) to assemled Base (F) with 2 Bolts (SC4), 2 Washers (SC17), using an Allen Wrench (SC1). Ensure all bolts are loose to allow for alignment.

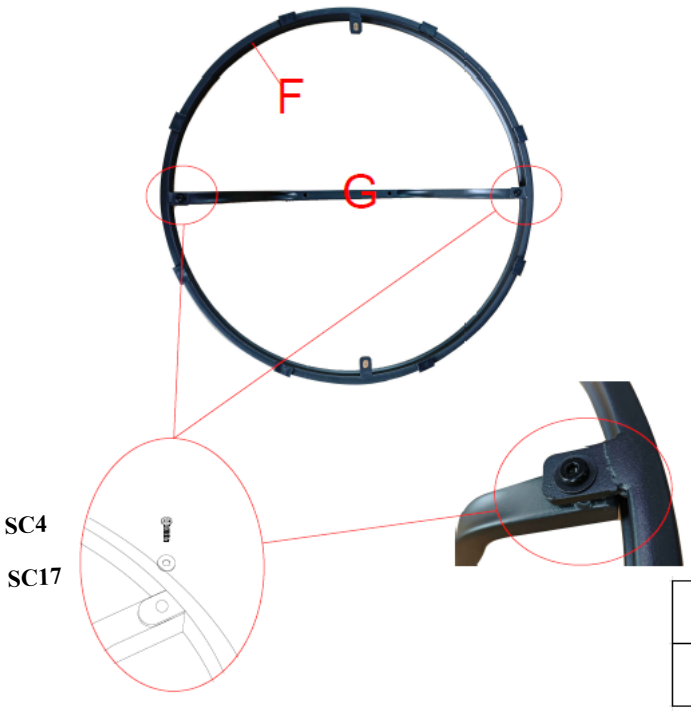

SC4		M6*20mm	2
SC17		Ø16*Ø6.5*1mm	2

7. Secure the Connecting Rod (H) to assemled Base (F) with 2 Bolts (SC4), 2 Washers (SC17), using an Allen Wrench (SC1). Ensure all bolts are loose to allow for alignment.

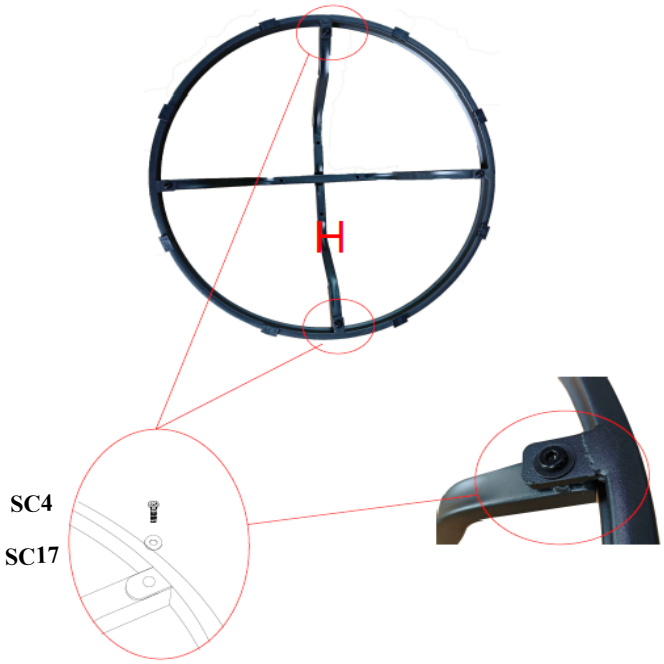

SC4		M6*20mm	2
SC17		Ø16*Ø6.5*1mm	2

8. Secure the Swivel Plate (J) to assemled Connecting Rod (G & H) with 4 Bolts (SC8), 8 Washers (SC17), 4 Spring Washers (SC19) and 4 M6 Nuts (SC20), using an Allen Wrench (SC1) and a Socket Wrench (SC30). Ensure all bolts are loose to allow for alignment.

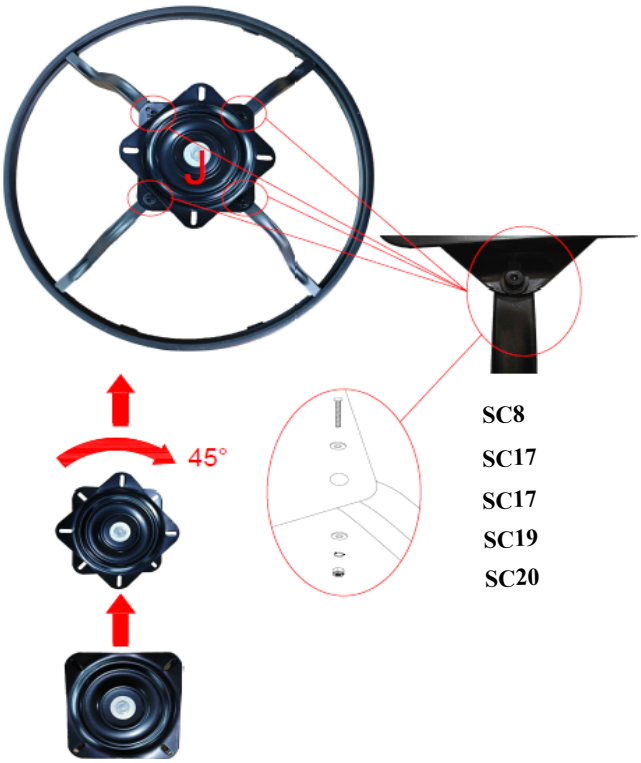

SC8		M6*35mm	4
SC17		Ø16*Ø6.5*1mm	8
SC19		Spring Washer	4
SC20		M6 Nut	4

9 Secure the U-shaped Fiting (I) to assemled Swivel Plate (J) with 4 Bolts (SC8), 8 Washers (SC17), 4 Spring Washers (SC19) and 4 M6 Nuts (SC20), using an Allen Wrench (SC1) and a Socket Wrench (SC30). Ensure all bolts are properly loose.

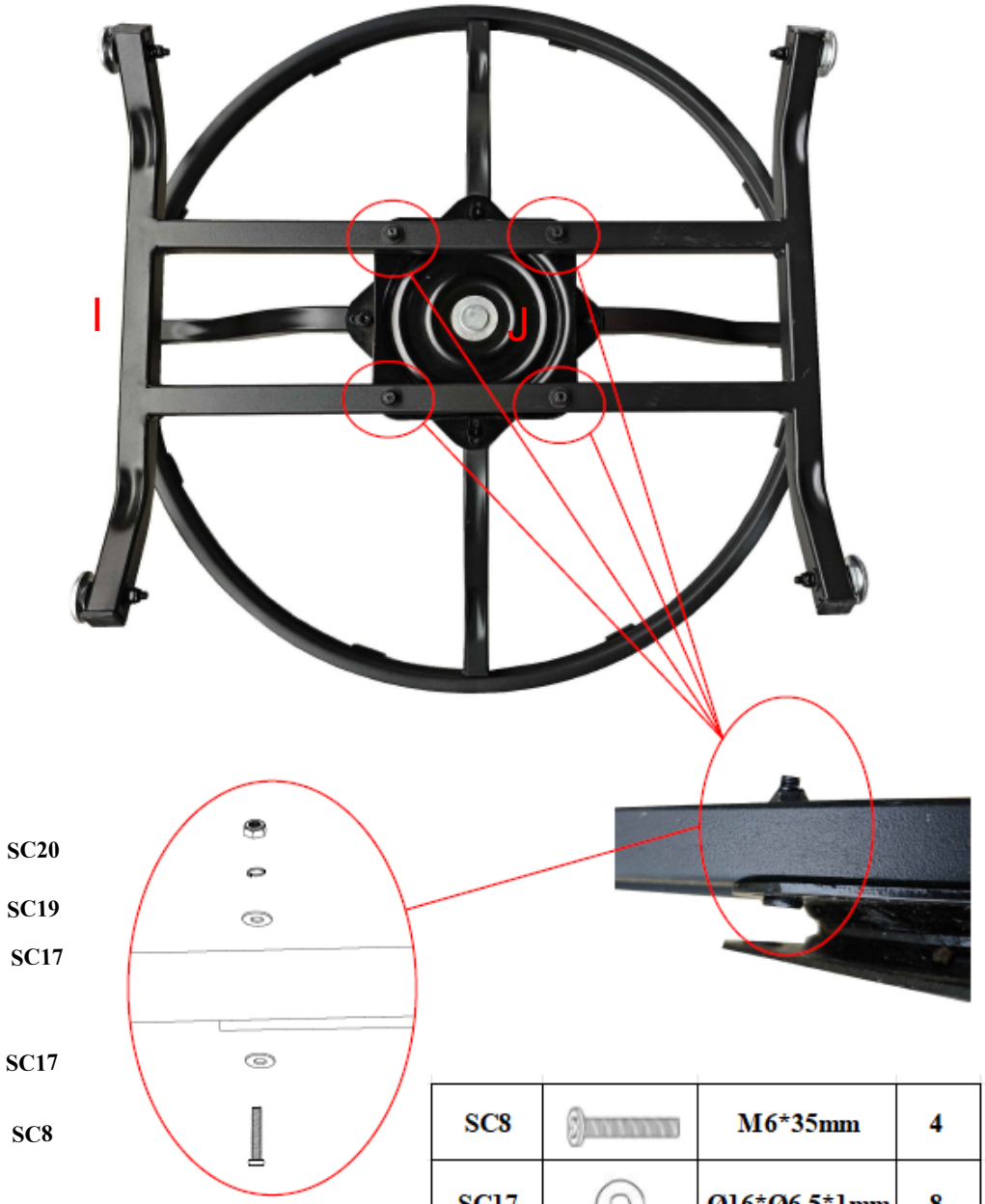

SC8		M6*35mm	4
SC17		Ø16*Ø6.5*1mm	8
SC19		Spring Washer	4
SC20		M6 Nut	4

10. Secure the Swing Arm (K) to assemled Sofa Arm (A & B) with 4 Bolts (SC31), 4 Washers (SC17), 4 Spring Washers (SC19) and 4 M6 Nuts (SC20), using an Allen Wrench (SC1) and a Socket Wrench (SC30). Ensure all bolts are properly tightented.

Do not lift the Swivel Plate up to assemble the Swing Arm and Sofa Arm.

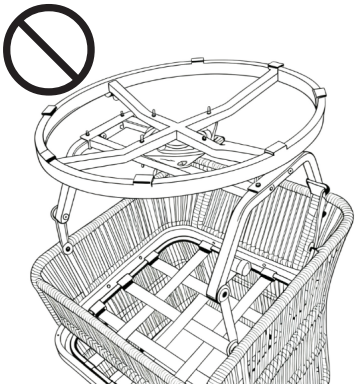

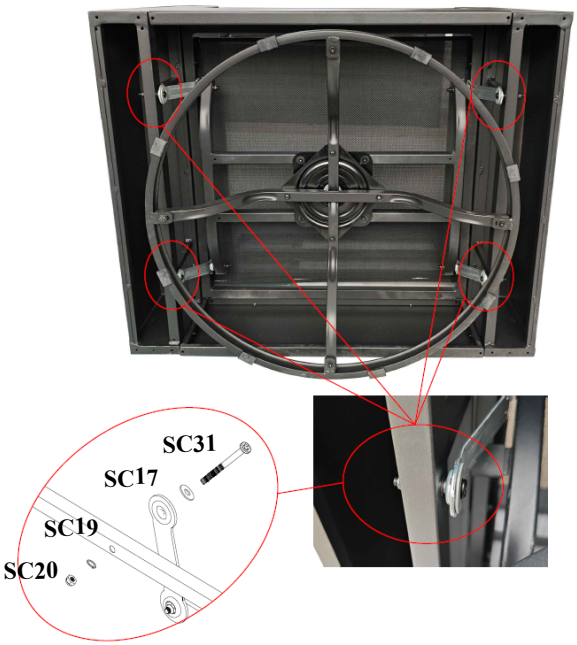

SC31		M6*45mm	4
SC17		Ø16*Ø6.5*1mm	4
SC19		Spring Washer	4
SC20		M6 Nut	4

11. Place the Seat and Back Cushions (L & K) onto the Sofa and it is ready for use.

Tips: All Seat Cushions should be tighted on the Back Panel, Right image for reference.

SPECIAL WARNING:

THIS CHAIR IS NOT A TOY. DON'T OVER-SWING THE CHAIR. OVER-SWING THE CHAIR MAYBE MAKE THE CHAIR TIP OVER AND RESULT IN INJURY.

DO NOT STAND ON THE CHAIR. ANY IMPROPER USE OF THIS PRODUCT MAY RESULT IN INJURY.