Assembly Instructions

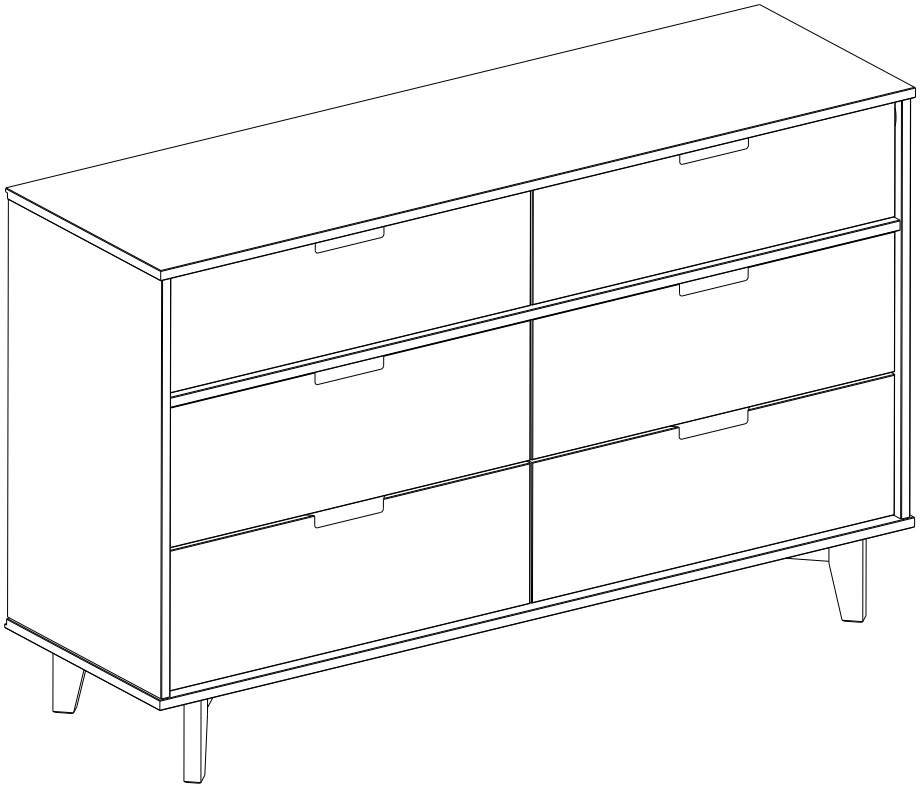

General Assembly Guidelines

I. Ensure that all parts and hardware are available before beginning assembly.

II. Follow each step carefully to ensure the proper assembly of this product.

III. Two people are recommended for ease in the assembly of this product.

IV. The three main types of hardware used to assemble this product are wood dowels, screws and bolts.

V. The provided glue is to secure wood dowels in place . When first inserting dowels , locate the appropriate hole for the dowel , place a small amount of glue in the hole and insert the dowel . Wipe away excess glue immediately.

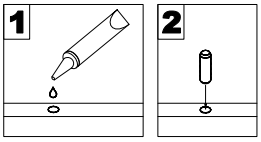

In future assembly steps when dowels are necessary to attach assembly parts together , place a small amount of glue on the end of the dowel before attaching parts together . Wipe away excess glue immediately.

VI. A Phillips head screwdriver is required for the assembly of this product.

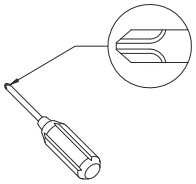

VII. Power tools should not be used to assemble this product.

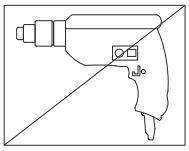

VIII. Maintenance Guide

To maintain long term performance and easy gliding of your solid wood drawers, we recommend applying wax to the wooden guide rails.
1. Bee's wax is recommended or Paraffin wax from a standard candle can be used.
2. Apply the wax by rubbing it on the wooden guide rails where there is wood-on-wood contact when opening and closing the drawer. (Wax should be room temperature, do not melt the wax onto the wood)
3. Wax should be applied every few months for the first year and then only when needed after that to keep the drawers sliding smoothly.

Parts List

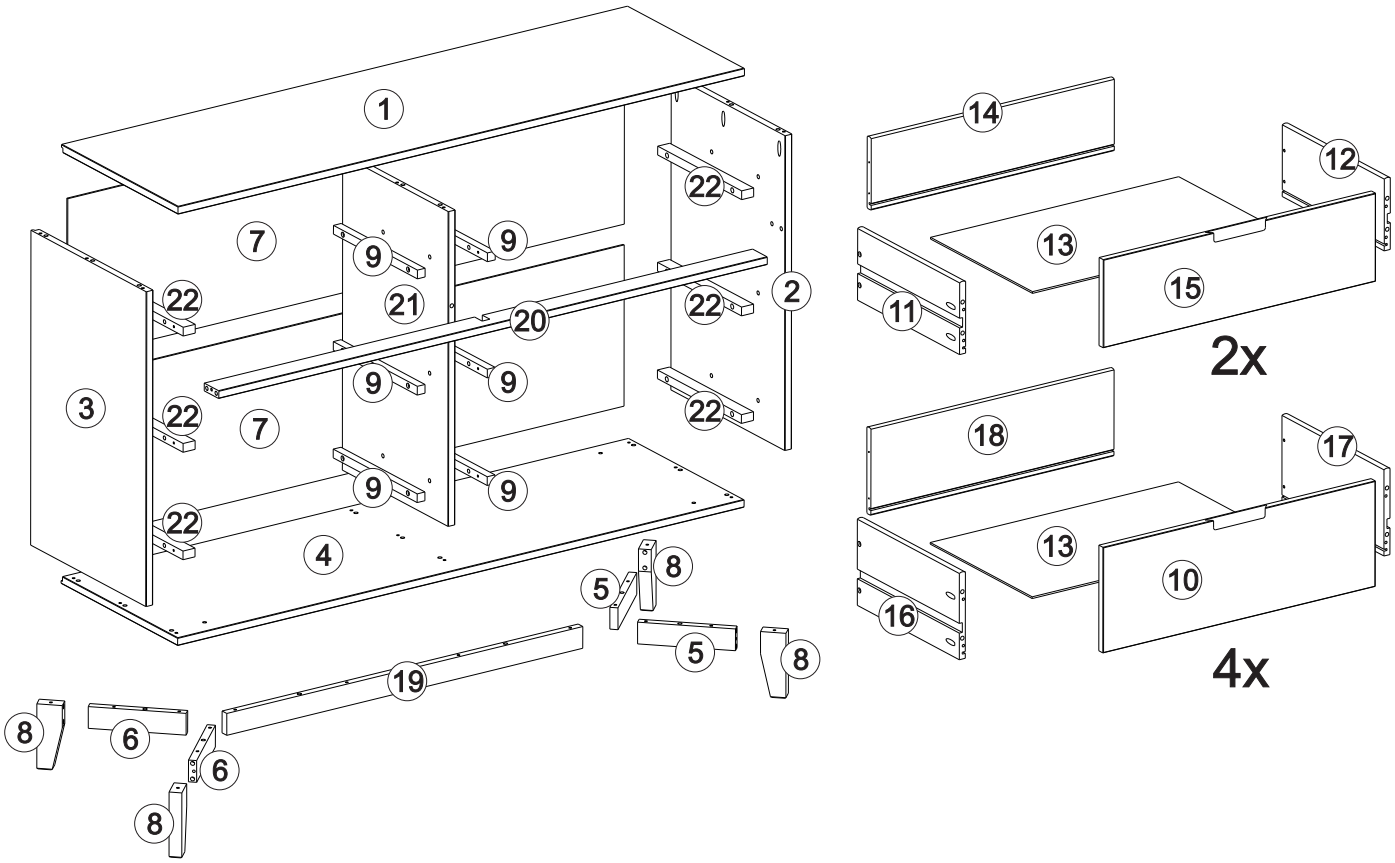

Part#	Description	Qty
1	Top panel	01
2	Right side panel	01
3	Left side panel	01
4	Bottom panel	01
5	Right crossbeam foot	02
6	Left crossbeam foot	02
7	Back panel	02
8	Foot	04
9	Small drawer runner	06
10	Large Drawer Front	04
11	Left drawer side	02

Part#	Description	Qty
12	Right drawer side	02
13	Drawer bottom	06
14	Drawer back	02
15	Small drawer front	02
16	Large left drawer side	04
17	Large right drawer side	04
18	Large drawer back	04
19	Leg crossbeam	01
20	Front crossbeam	01
21	Division	01
22	Large drawer runner	06

Hardware List

A		Ø8*30mm	Wooden dowel	61 pcs
B		Ø8*20mm	Wooden dowel	48 pcs
C		Ø3,5*25mm	Screw	24 pcs
D		Ø3,5*30mm	Screw	65 pcs
E		Ø4,0*40mm	Screw	21 pcs
F		Ø10*10	Nail	36 pcs
G		Ø7*80mm	Screw	04 pcs
H		4mm	Hex Key	01 pcs
I			Glue	01 pcs
J		1272mm	“H” Profile	01 pc
K			Wall anchor	01 pc
L			Washer	02 pc
M			Ø6mm	01 pc

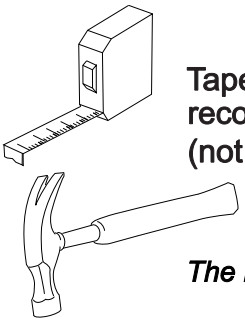

Tape measure and hammer recommended for assembly (not included)

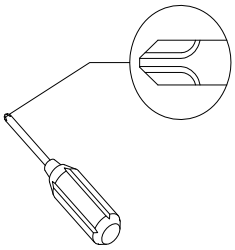

Philips head screwdriver required for assembly (not included)

The hardware quantities listed above are required for proper assembly.
Some extra hardware may also have been included.

Step 1

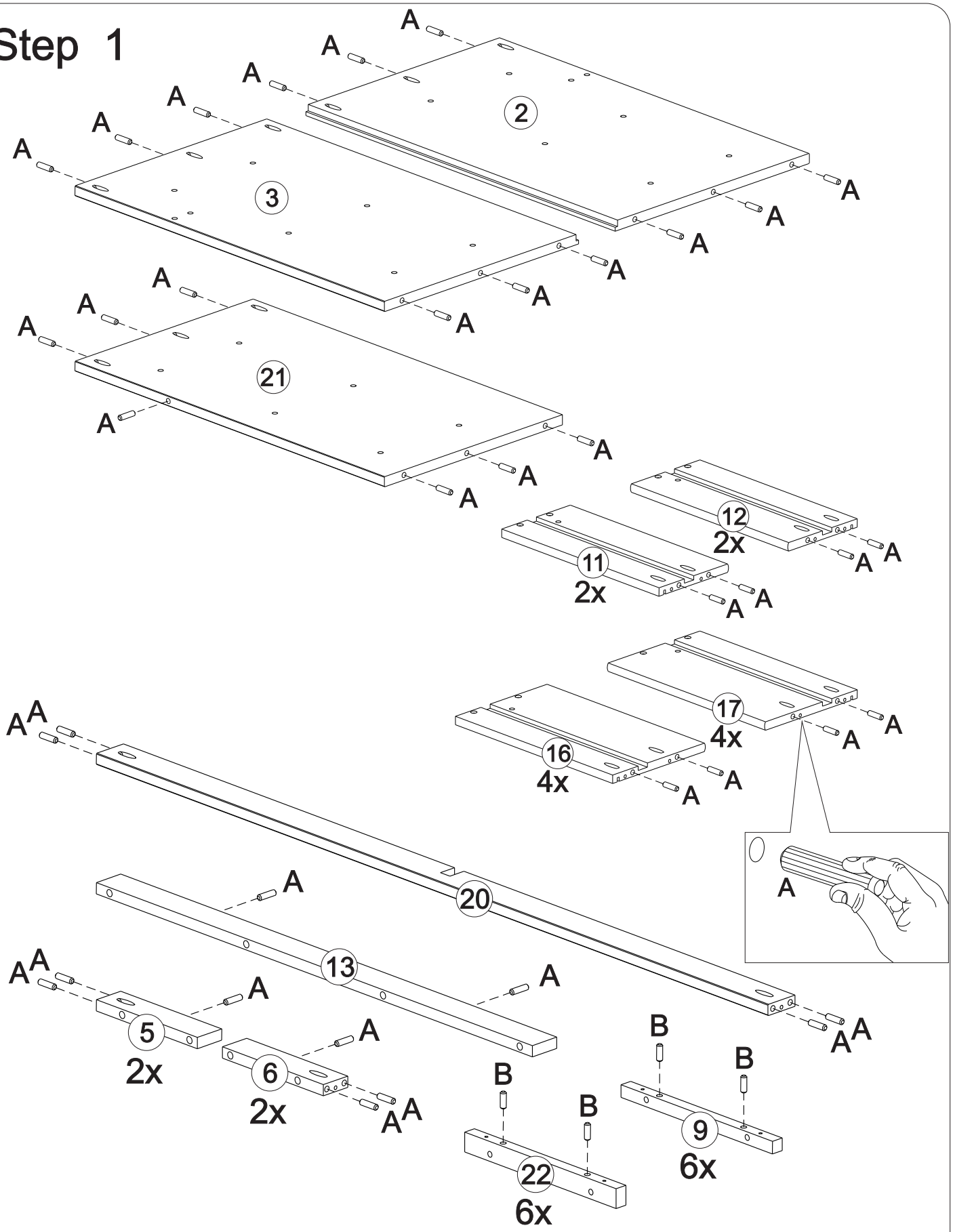

A	Ø8*30mm	61
B	Ø8*20mm	24
I		01

Insert wood dowel (A) and glue (I) into parts (2, 3, 5, 6, 11,12, 13, 16, 17, 20, 21). Insert wood dowel (B) and glue (I) into part (9, 22).

Please assemble on a clean soft surface to avoid damage.

Step 2

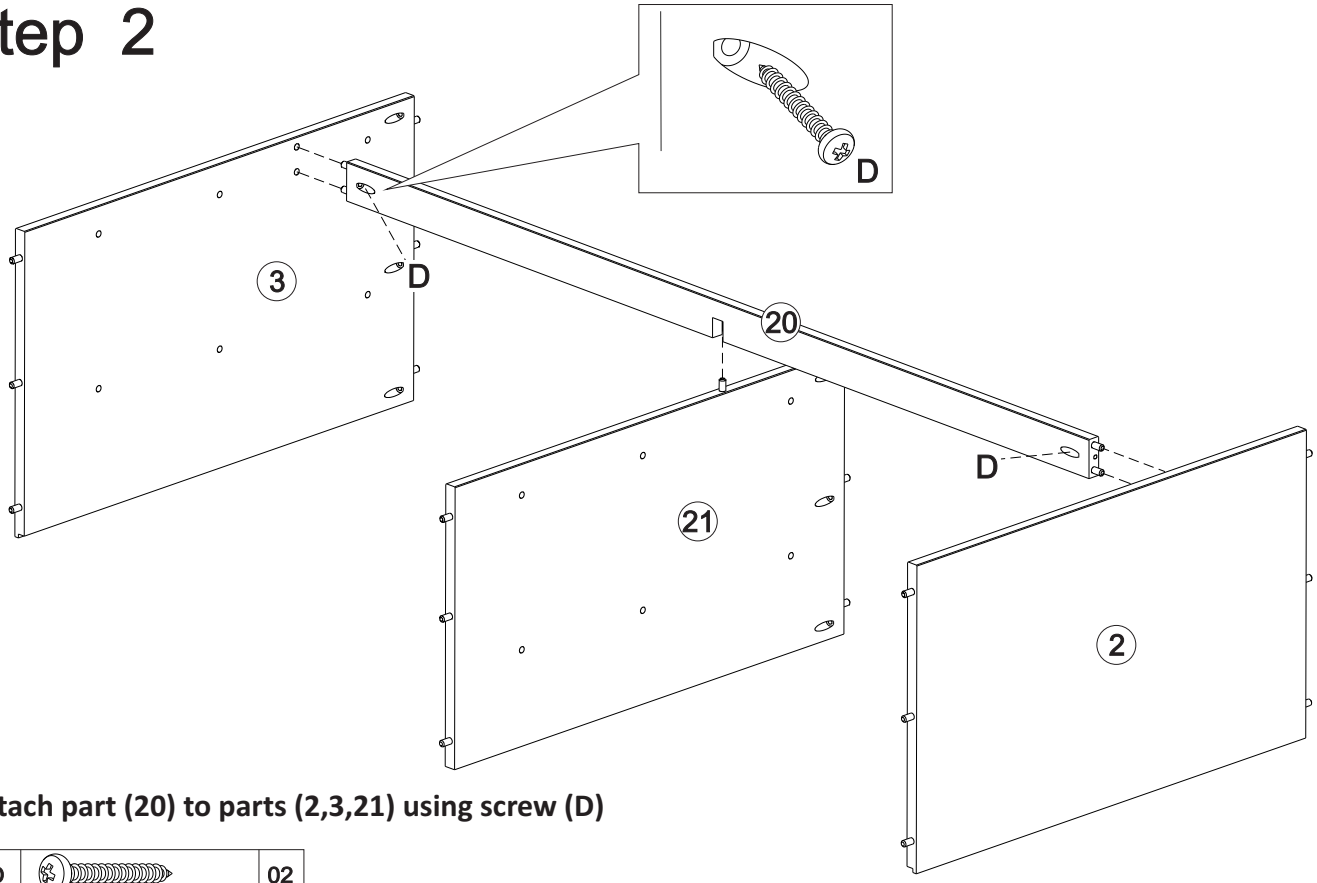

Attach part (20) to parts (2,3,21) using screw (D)

D	Ø3,5*30mm	02

Step 3

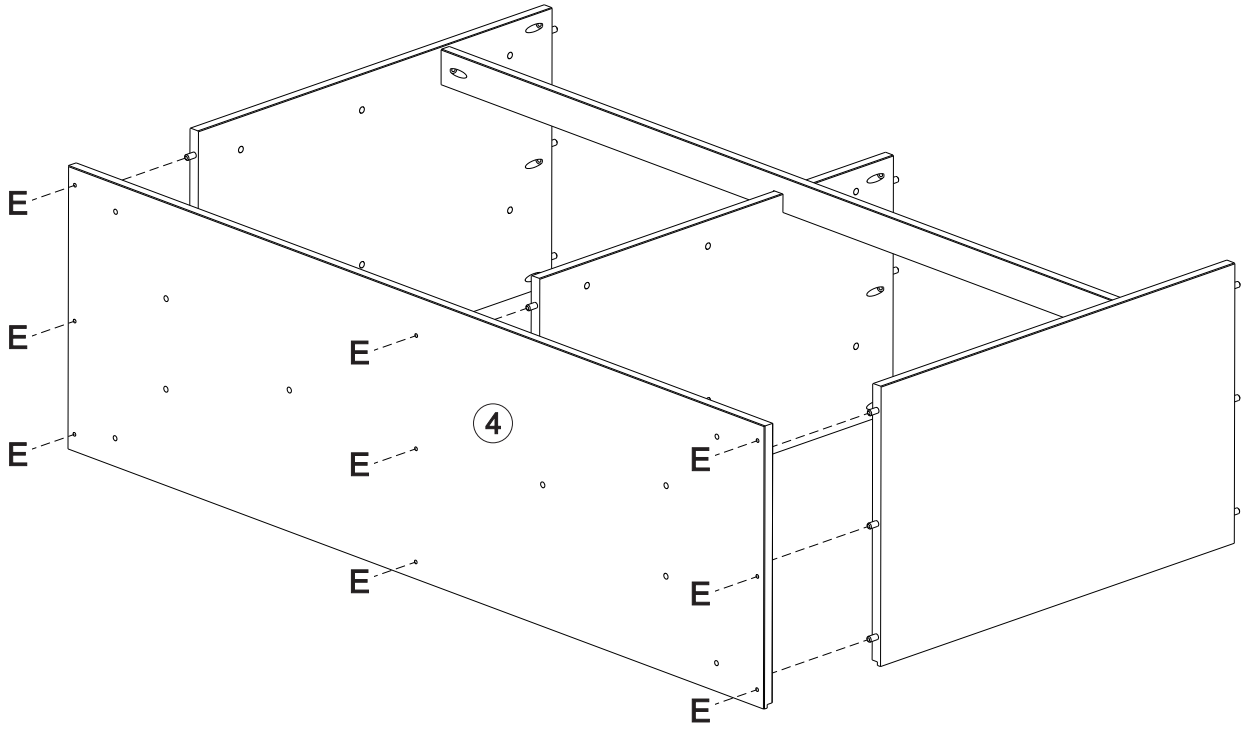

Attach part (4) to body with screws (E)

E	Ø4,0*40mm	09

Step 4

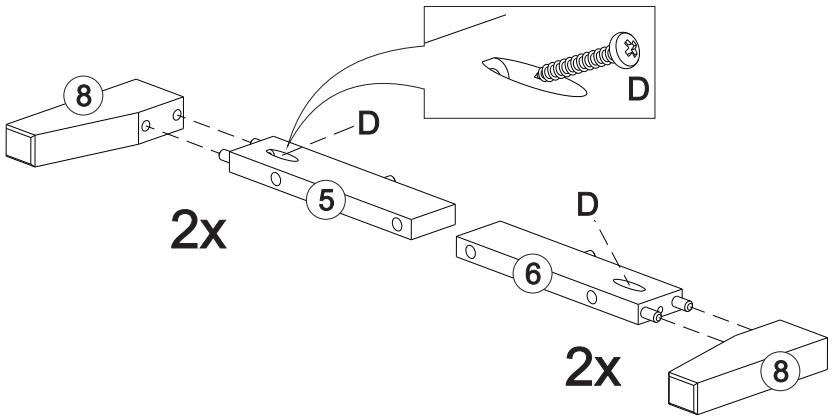

Use screw (D) to attach part (5) to part (8)
and attach part (6) to part (8), do this step twice

D	Ø3,5*30mm	04

Step 5

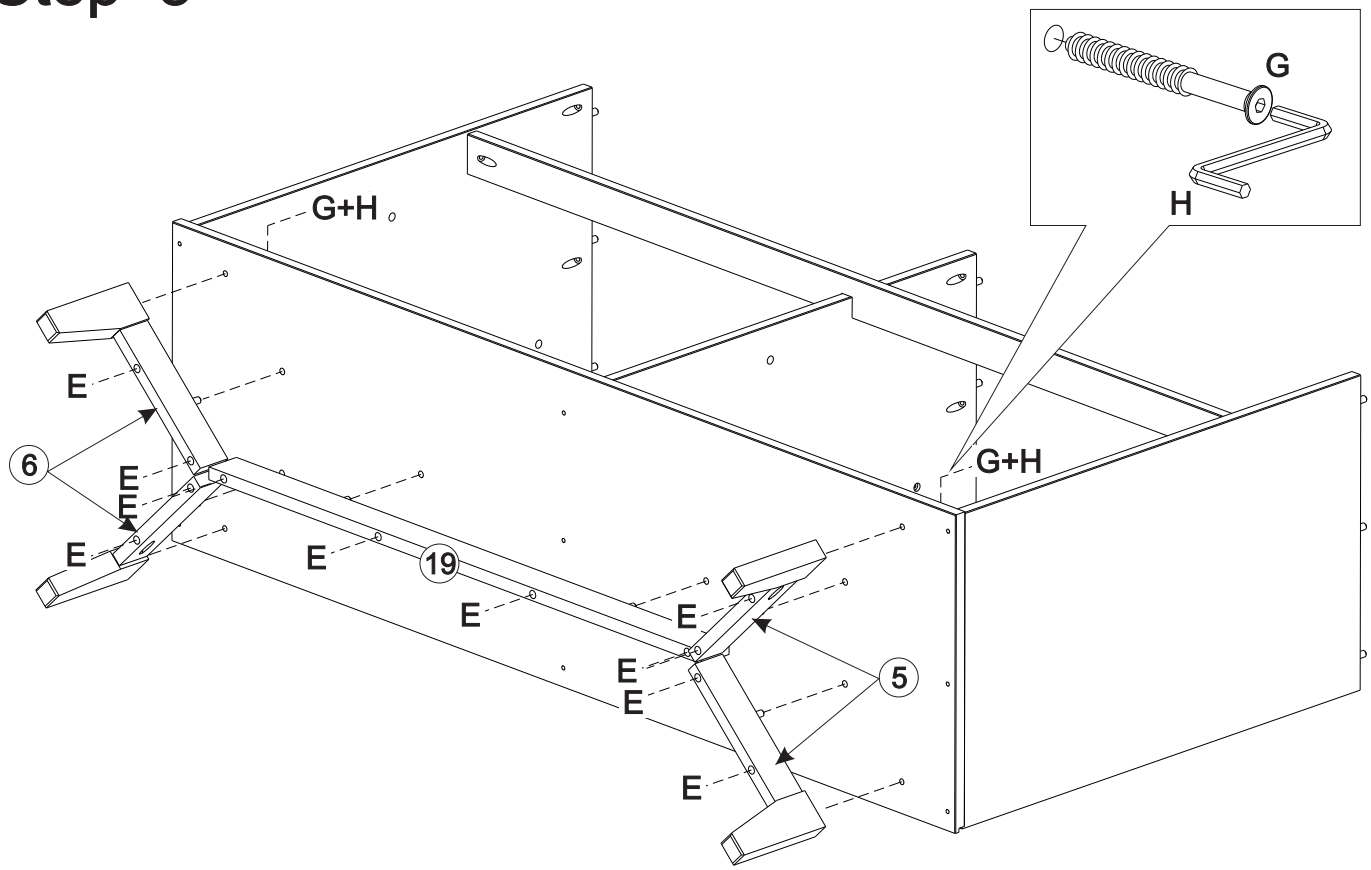

E	Ø4,0*40mm	12
G	Ø7*80mm	04
H	4mm	01

Attach leg to body.secure feet to the body
from inside the unit with bolt (G) and hex key (H).
Use screw (E) to secure legs to body
Secure crossbar (19) to body with screw (E).

Step 6

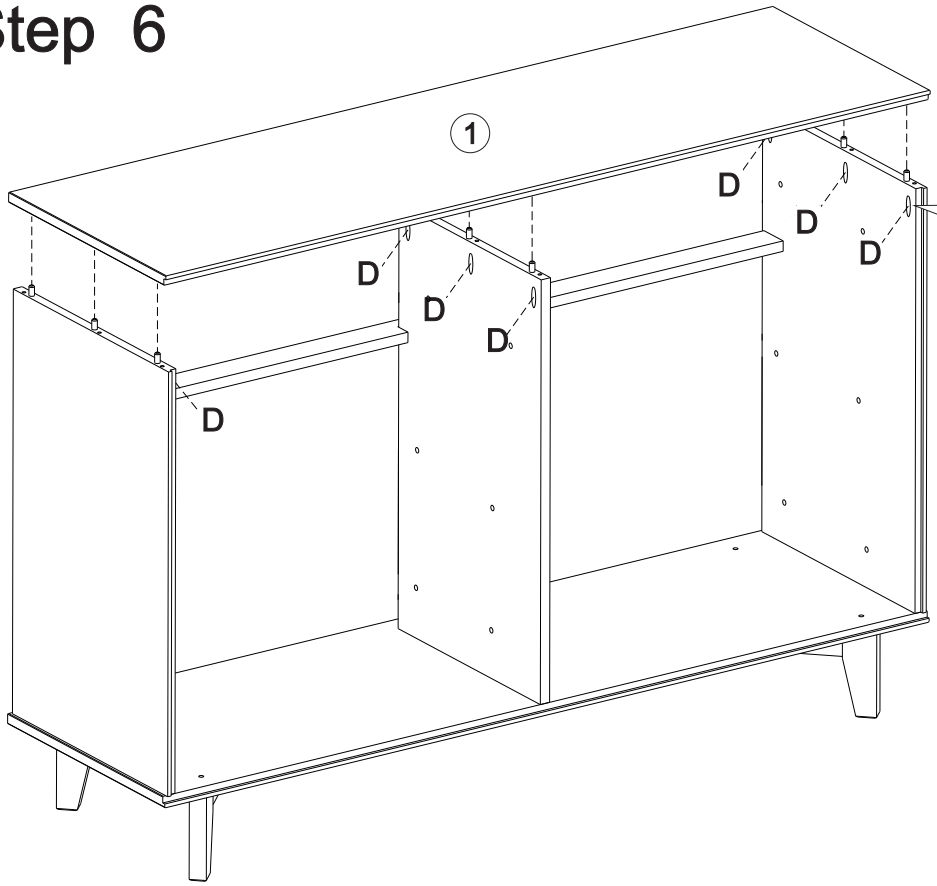

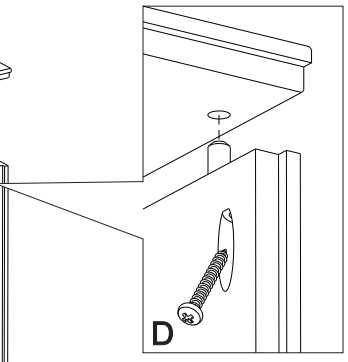

Use screw (D) to attach part (1) to body

D	Ø3,5*30mm	09

Step 7

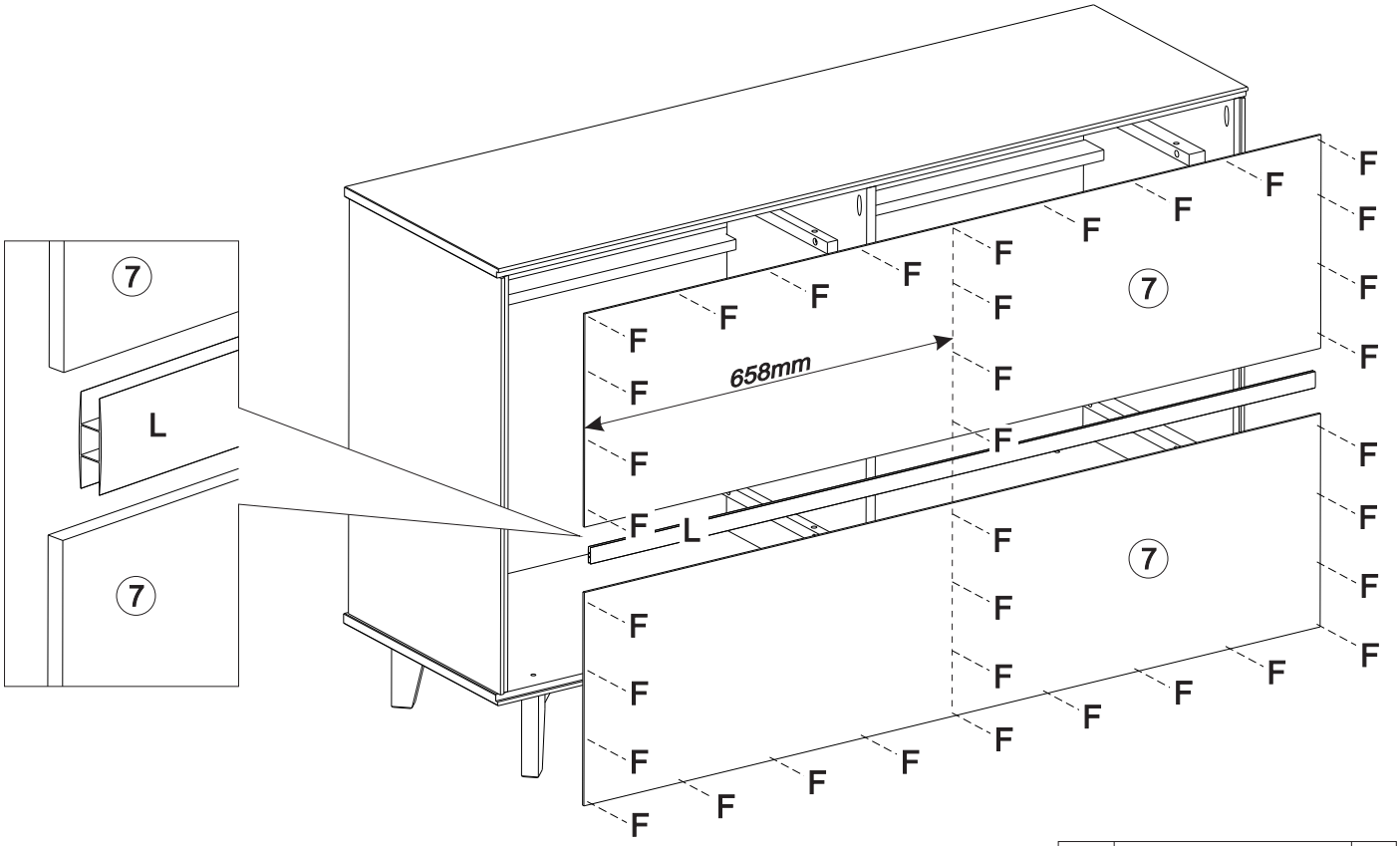

F	Ø10*10	36
L	1272mm	01

Secure back panel (7) with part (L) to body with nails (F)

Step 8

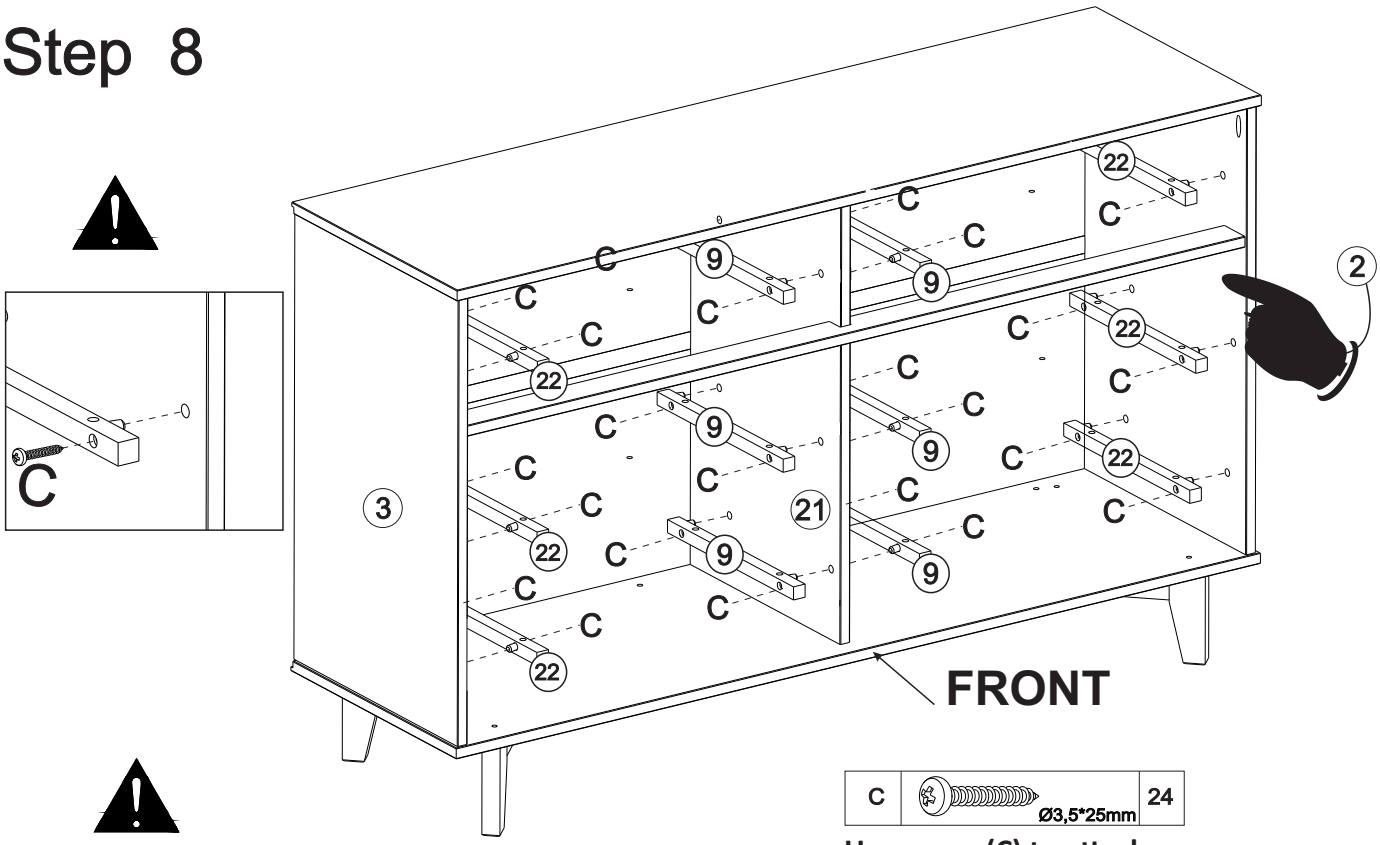

C	Ø3,5*25mm	24

Use screw (C) to attach parts (9) to BOTH sides of part (21)
***NOTE*: The extra holes in part (9) should face the top of part (21)**

Use screw (C) to attach parts (22) to parts (2,3)
***NOTE*: The extra holes in part (22) should face the top of parts (2,3)**

Step 9

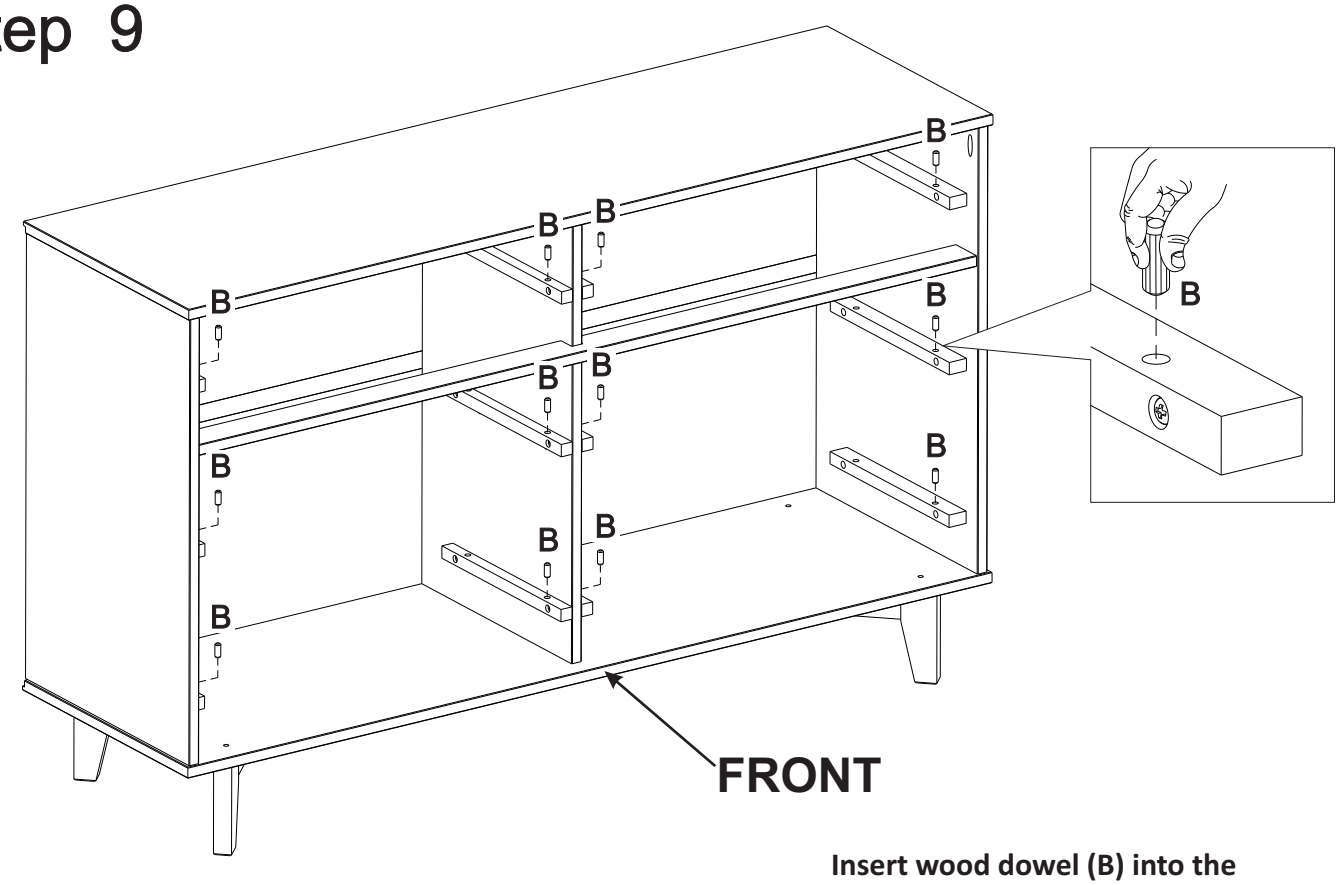

Insert wood dowel (B) into the front hole in the drawer rails (9 & 22)

B	Ø8*20mm	12

Step 10

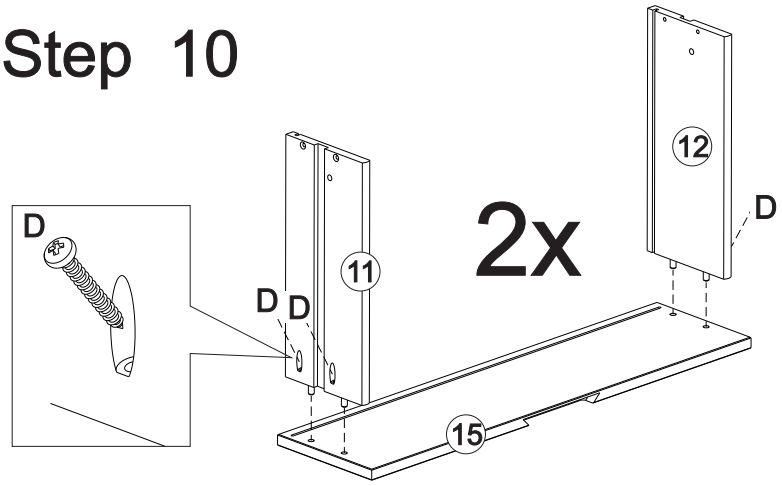

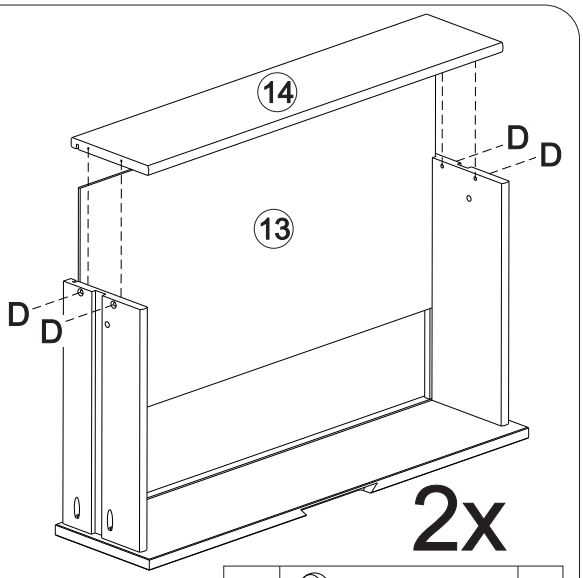

Attach parts (11,12) to part (15) , insert panel (13) into groves and secure part (14) with screws(D).

D	Ø3,5*30mm	16

Step 11

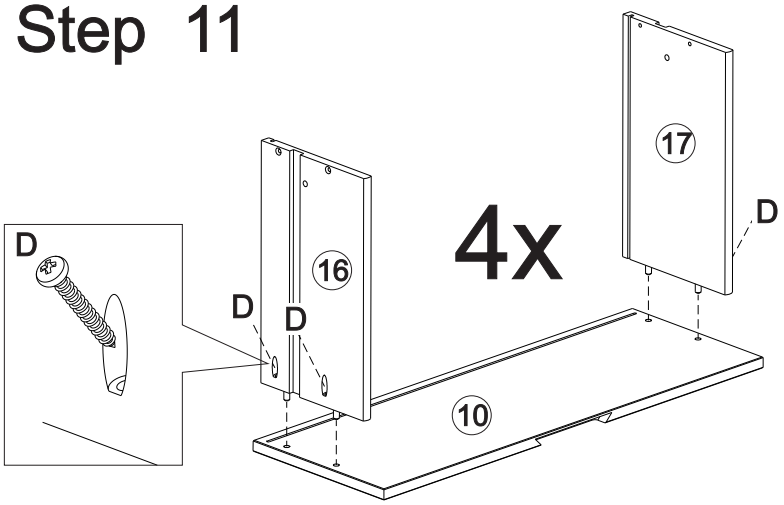

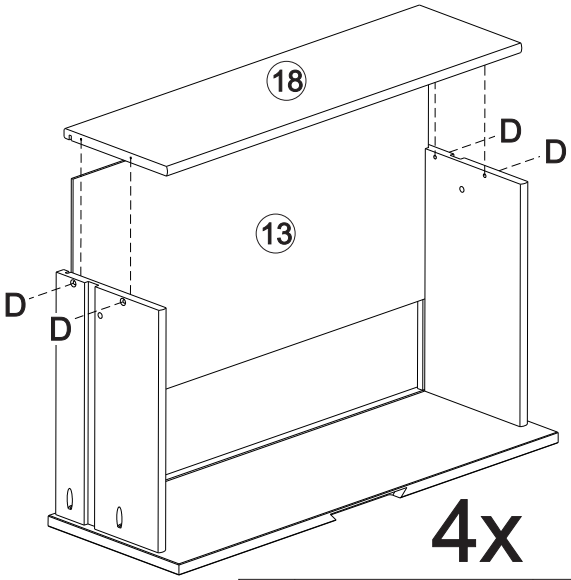

Attach parts (16,17) to part (10) , insert panel (13) into groves and secure part (18) with screws(D).

D	Ø3,5*30mm	32

Step 12

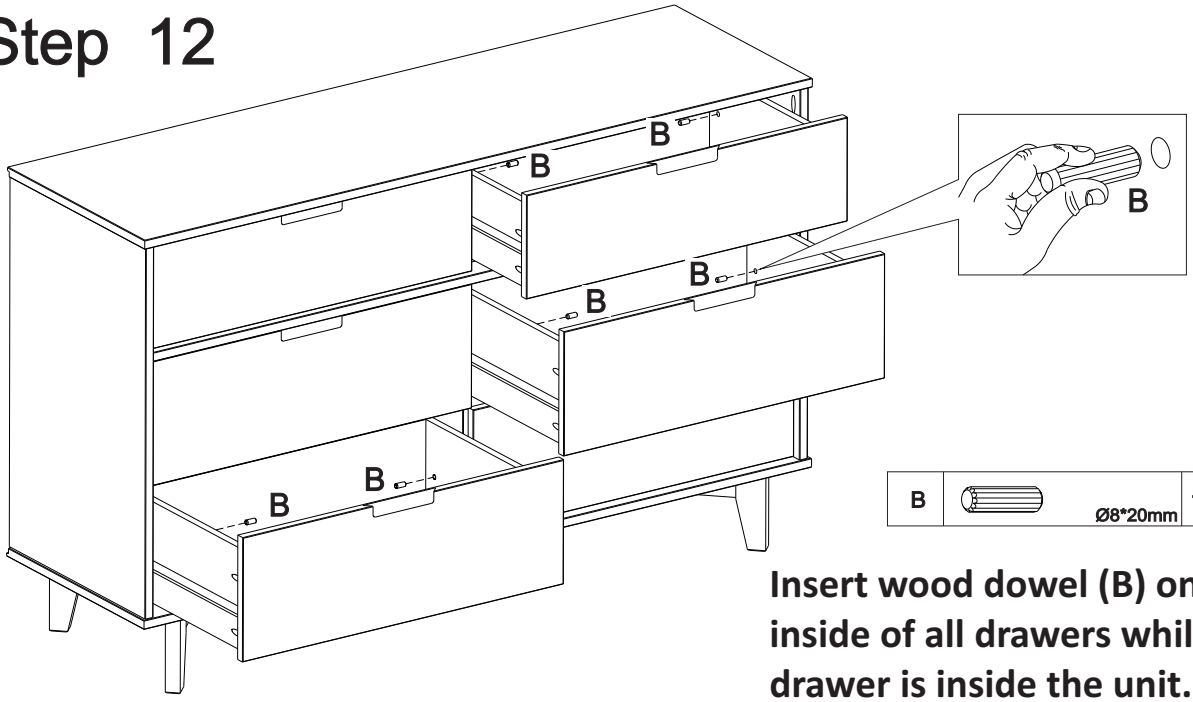

B	Ø8*20mm	12

Insert wood dowel (B) on the inside of all drawers while drawer is inside the unit.
Make sure dowel is flush with panel.

Assembly Complete!

WARNING

Serious or fatal injuries can occur from furniture tipping over. To prevent the furniture from tipping over we recommend that it is permanently fixed to the wall.

Wall anchor and hardware are included with this product. Please make sure hardware is suitable for your walls before installing, as different wall materials may require different types of anchors.

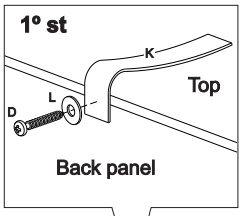

1°st

Attach part (K) with Screw (D) and Washer (L), in the frame of superior panel unit.

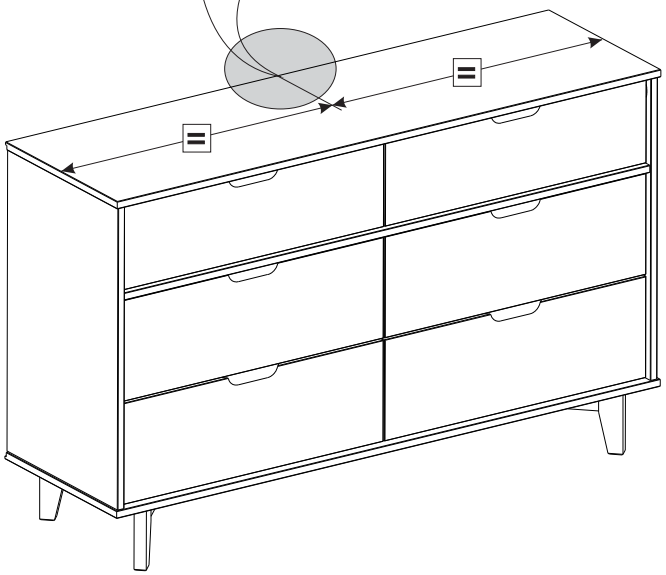

2°nd

With drilling machine make one hole in the wall, Insert part (M) in the hole.
Secure part (K) with Screw (D) and Washer (L), in the wall.

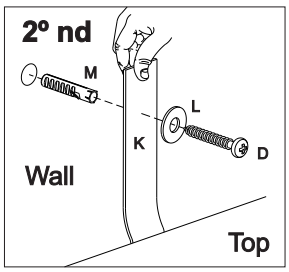

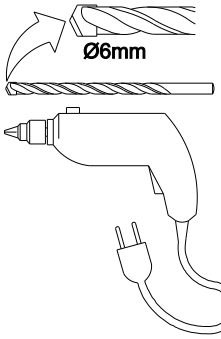

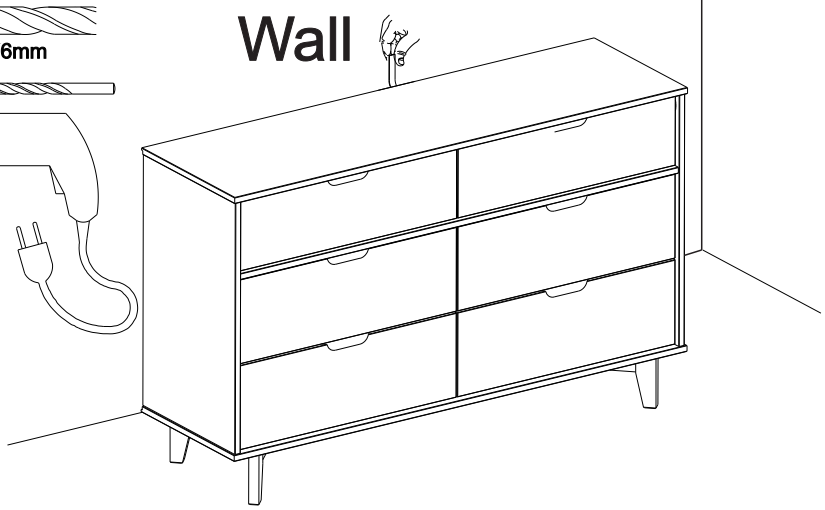

D	Ø3,5*30mm	02
K		01
L		02
M		01