ASSEMBLY CONSTRUCTION

SKU CODE: N842P271333

Warning: You must read it before continuing



SAFETY WARNINGS AND GENERAL NOTES:

1. Do not use substitute parts. Contact the manufacturer or dealer for replacement parts.

2. Keep these instructions for future reference.

3. We recommend assembling your chair on the shipping carton to protect your floor.

4. Be certain all staples are out of the box before beginning assembly on the shipping

02/08



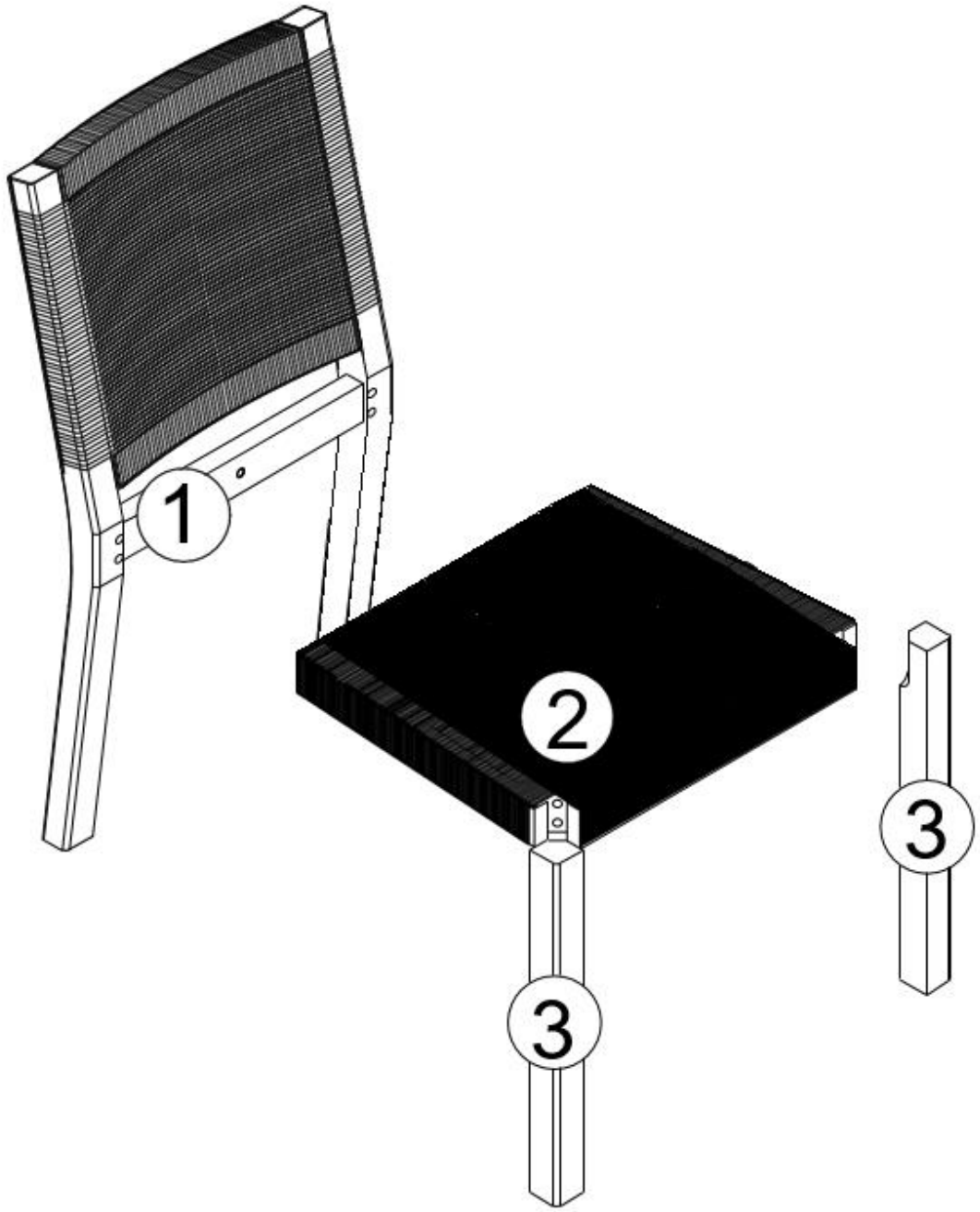

04/08

Part List

1 Back Chair - 2pc

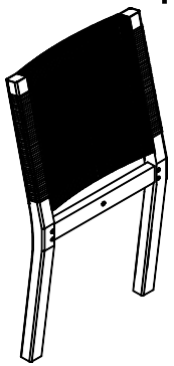

2 Seat Frame - 2pc

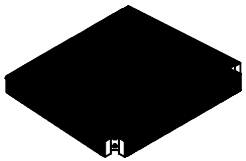

3 Front Leg - 4pcs

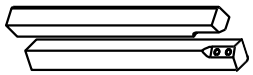

Hardware List

A Bolt Ø1/4"x60mm-8Pcs



B Bolt Ø1/4"x75mm-8Pcs



C Bolt Ø1/4"x40mm-2Pc



D Ø1/4" - 18Pcs



E Ø1/4" - 18Pcs

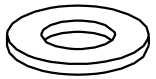

F 4mm-2Pc

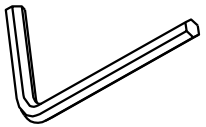

05/08

Step 1:

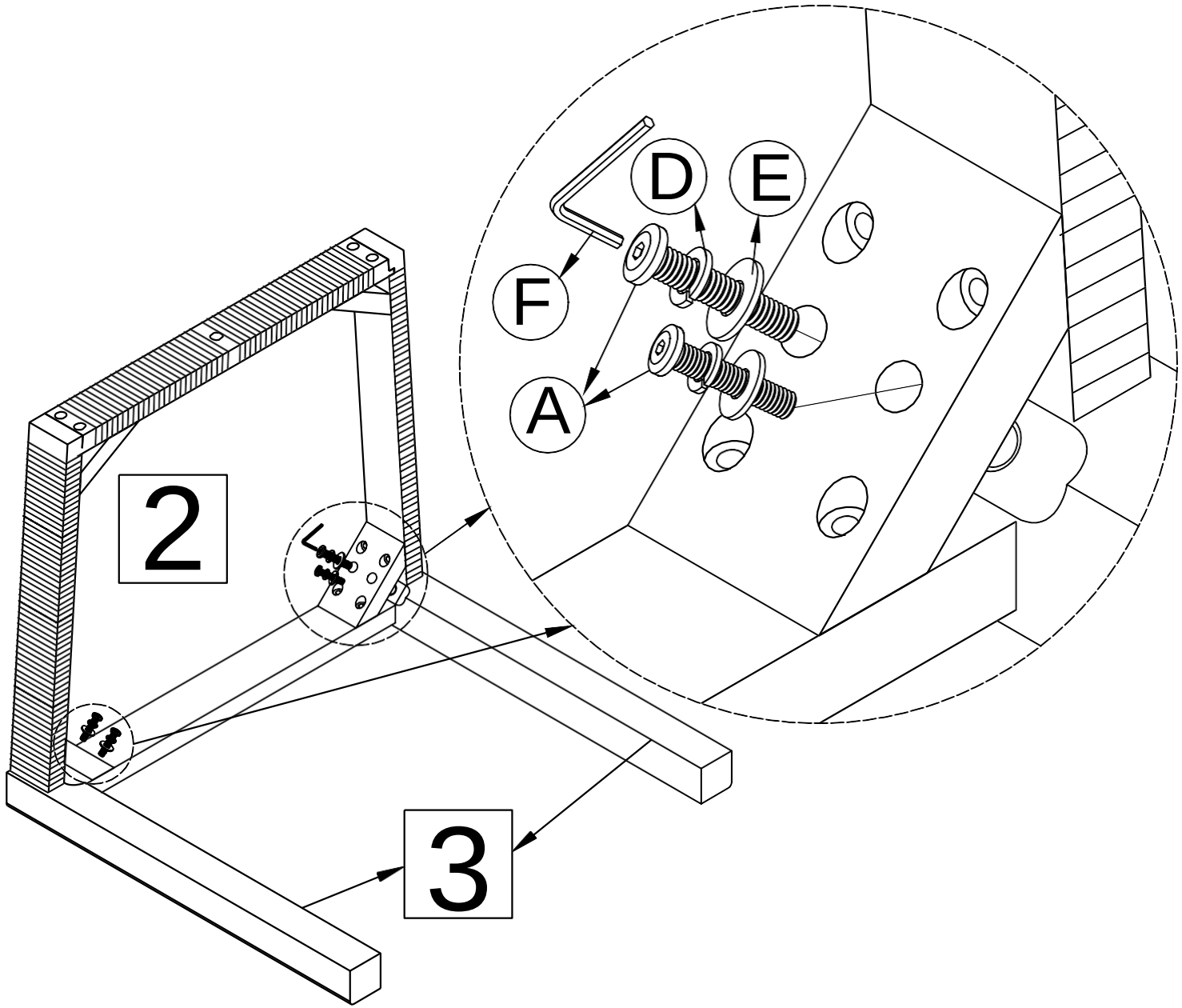

06/08

Step 2:

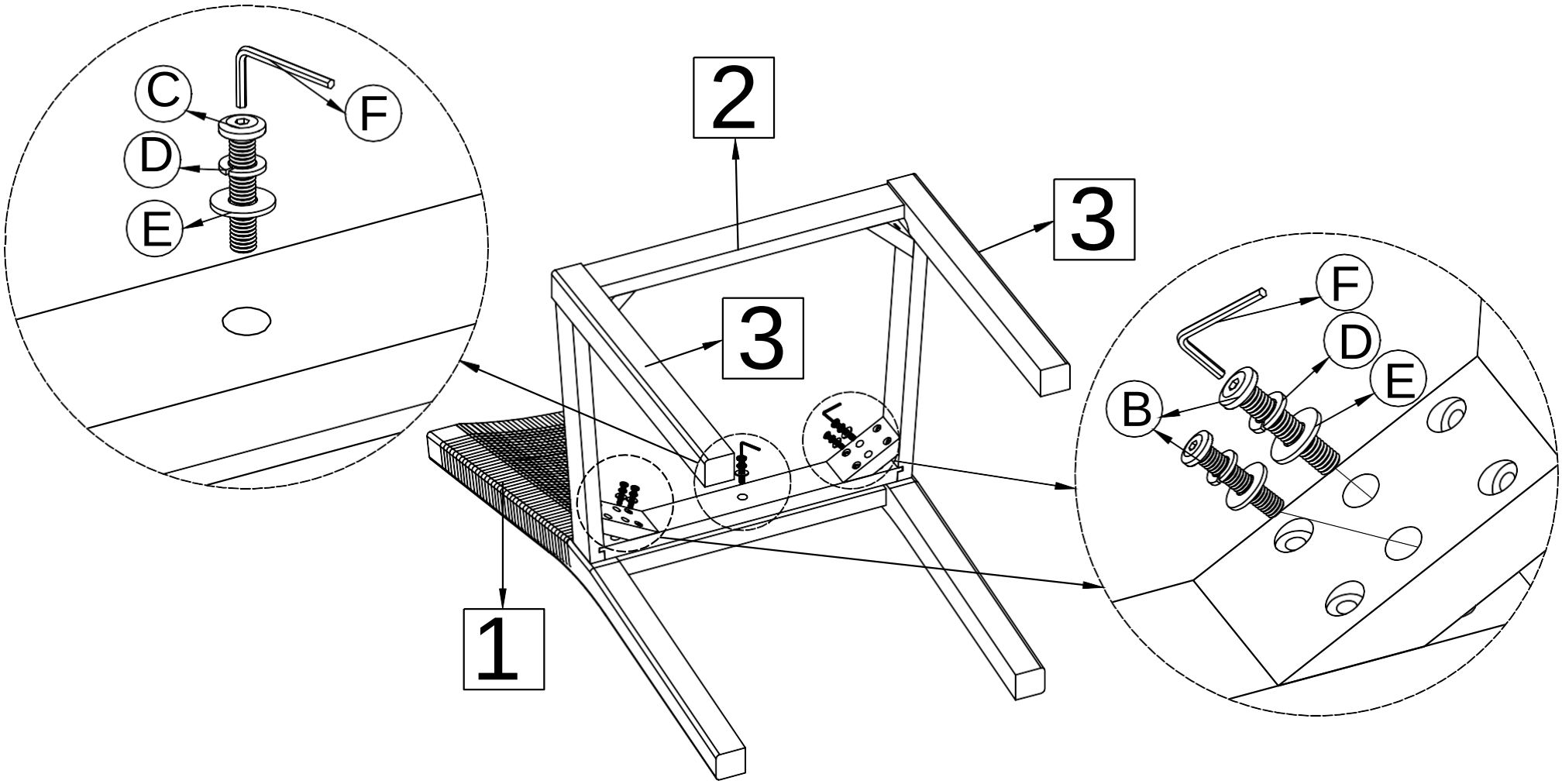

07/08

Step 3:

