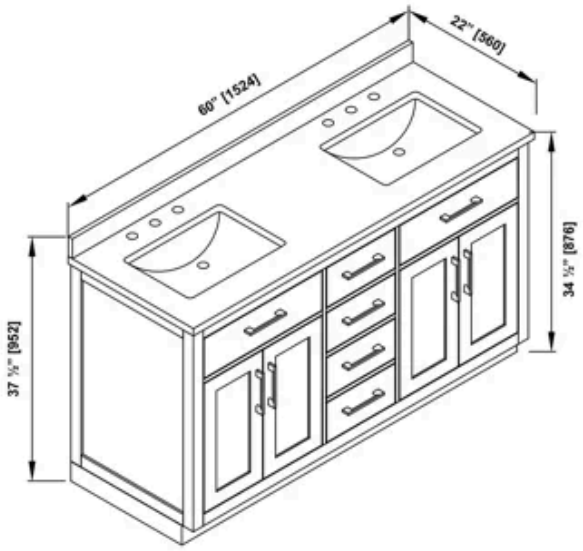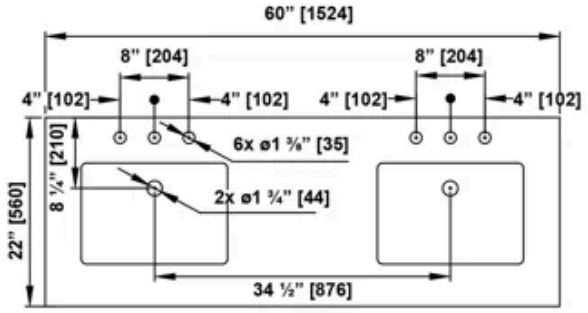SPECIFICATION