Wooden Arbor Assembly Instruction

PLEASE READ THROUGH BEFORE BEGINNING ASSEMBLY.
1. Check boxes for Contents Listed.
2. In the event of missing, damaged or defective parts, please feel free to reach out to us.
3. Suggest two people to assemble it to avoid parts falling.

Note：To add stability of assembly, apply small amount of exterior wood glue to wood holes and rods during assembling.

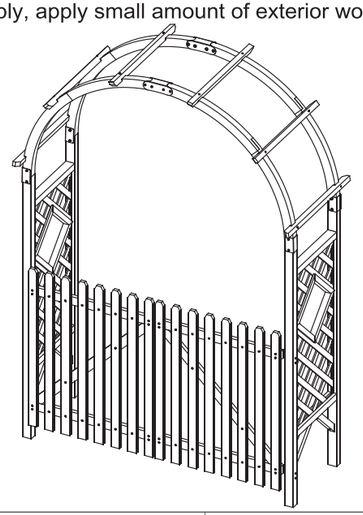

① (2 pcs)	② (4 pcs)	③ (6 pcs)	④ (1 pcs)
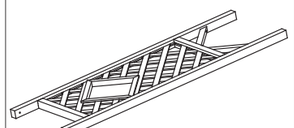	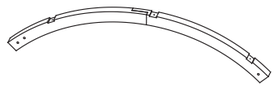	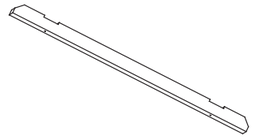	

⑤ (3 pcs)	⑥ (2 pcs)	⑦ (4 pcs)	⑧ (8 pcs)	⑨ (2 pcs)	⑩ (2 pcs)	
						The number of screws is based on the quantity listed in the instruction manual; any extras are spare parts.

A (16SETS)	B (24 PCS)	C (44 PCS)	D (12PCS)	E (4 PCS)	F (2 PCS)	G (4 PCS)	H (1 PCS)
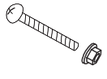 6x45mm	 4x40mm	 4x25mm	 4x20mm	 4x50mm	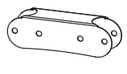	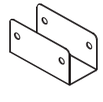	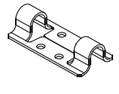

I(8PCS)	TOOLS & MATERIALS NEEDED
 dowel pin	

1

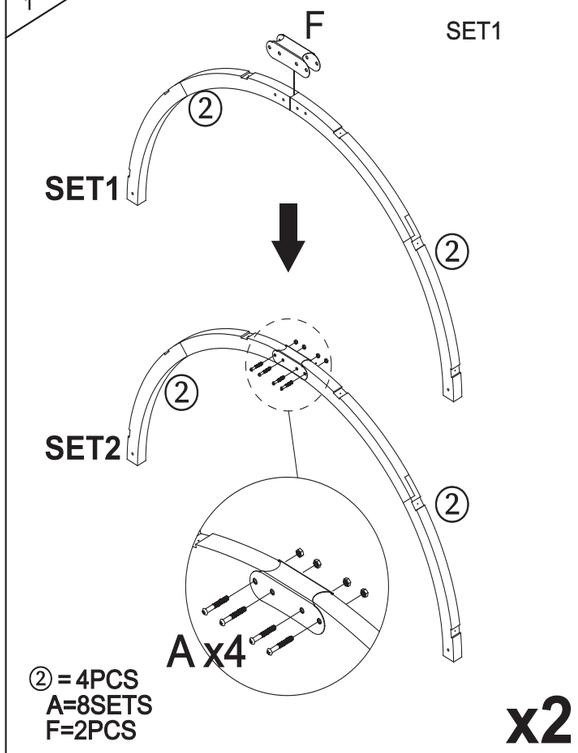

2

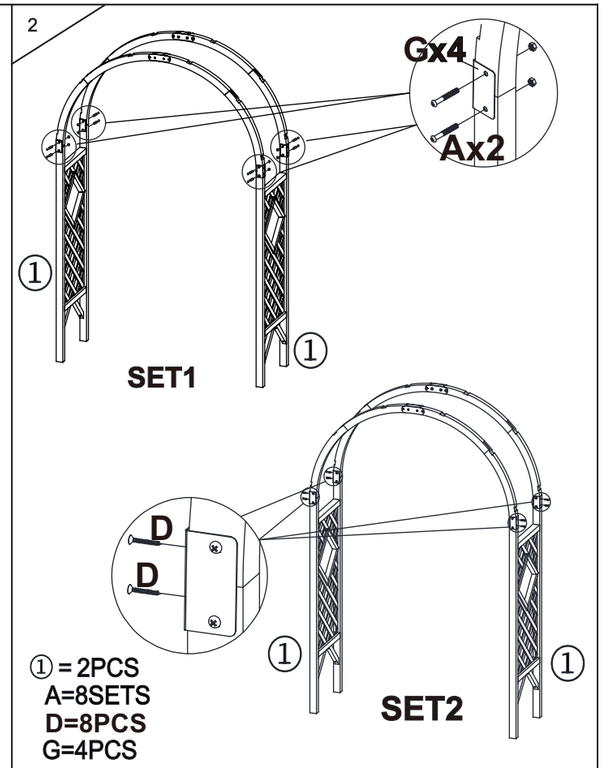

3

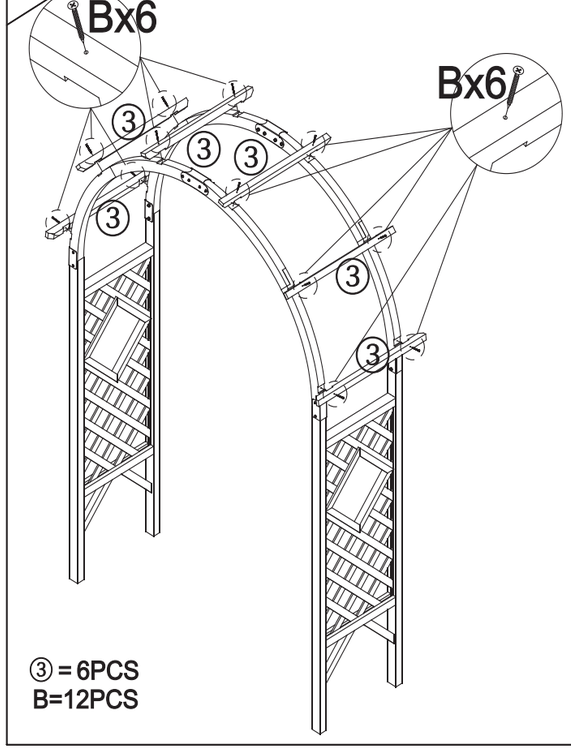

4

The width of the wooden strip itself is 43mm, and the spacing of the fence is also 43mm. When installing, one wooden strip can be used as a spacer tool.

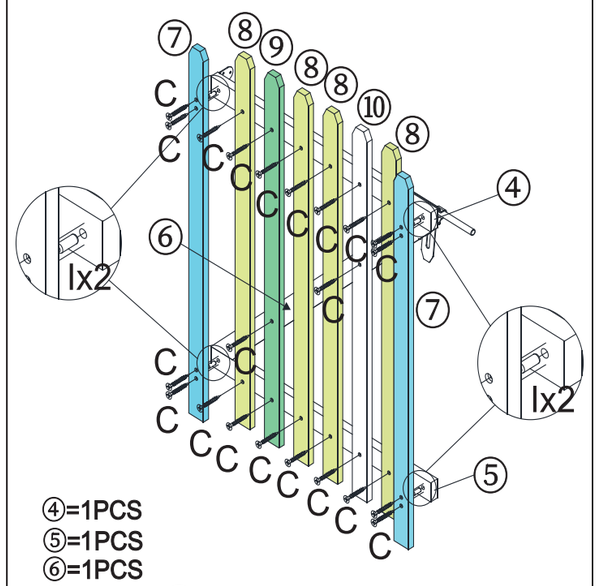

5

The width of the wooden strip itself is 43mm,
and the spacing of the fence is also 43mm.
When installing, one wooden strip
can be used as a
spacer tool.

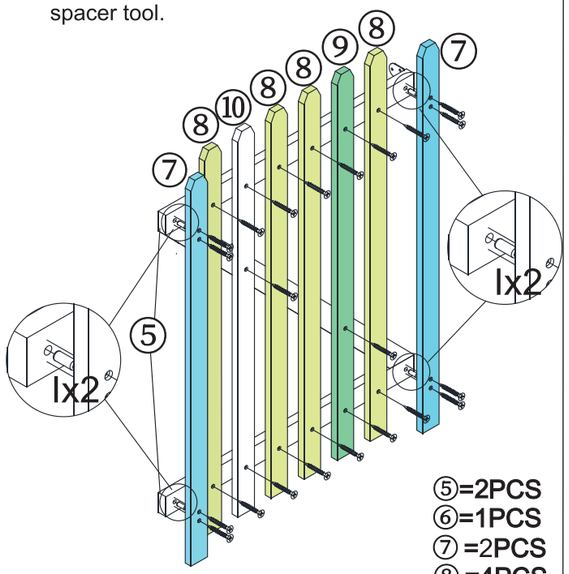

⑤=2PCS
⑥=1PCS
⑦ =2PCS
⑧ =4PCS
⑨ =1PCS
⑩ =1PCS

I=4PCS C=22PCS

6

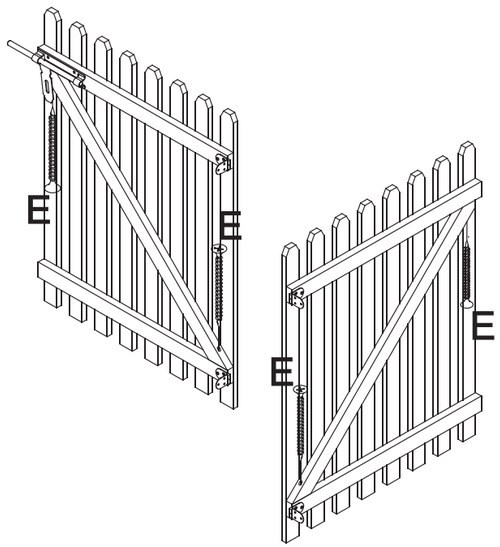

E=4PCS

7

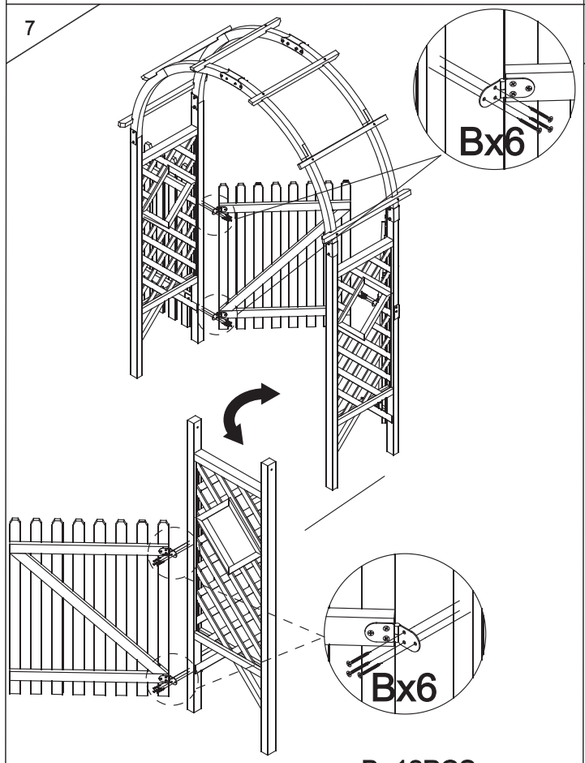

B=12PCS

8

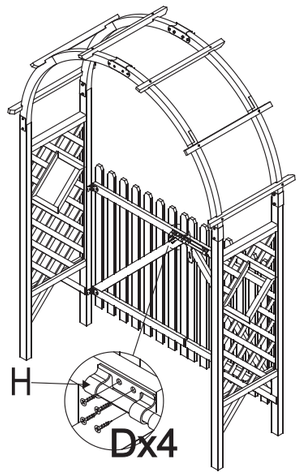

D=4PCS
H=1PCS