TEAR SHEET

Lazari 13" Cordless Accent Lamp

Item # ARN 3465CG-L-CL



Designer: AERIN

Height: 12.5"
Width: 8.5"
Base: 2.75" Round
Finishes: CG
Shade Treatments: L
Shade Details: 5.25" x 8.5" x 7"
Lightsource: Rechargeable LED w/ Touch Dimmer
Wattage: 1.7w (60 - 250lm)
Weight: 5 Pounds
Note: Rechargeable LED Lightsource and Charging Cable Included

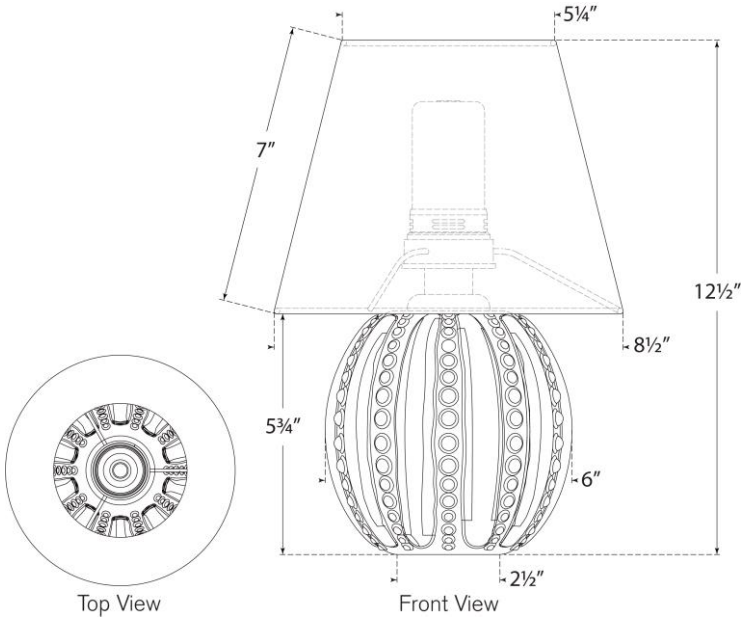

VISUAL COMFORT & CO.

DAMP LED