ALTA BAY Bath Accessories Collection

Specifications

Material Content	zinc base & aluminum ring
Installation hardware	included

Dimensions

18" towel bar

tp holder

towel ring

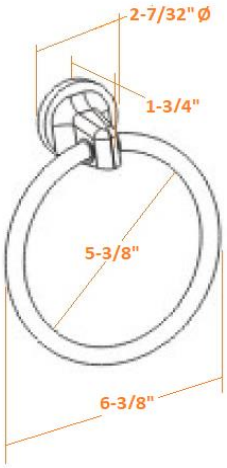

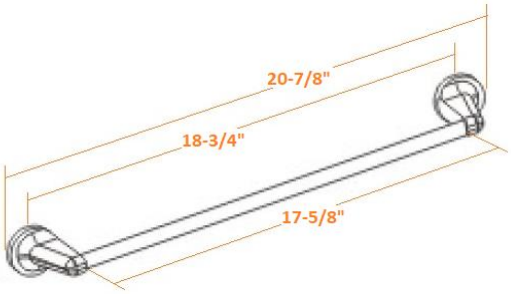

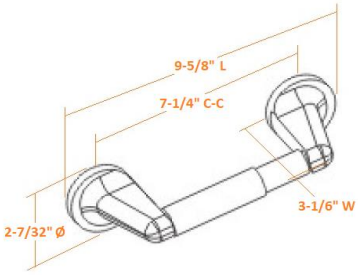

robe hook

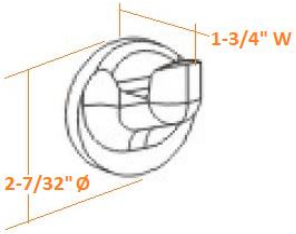

24" towel bar

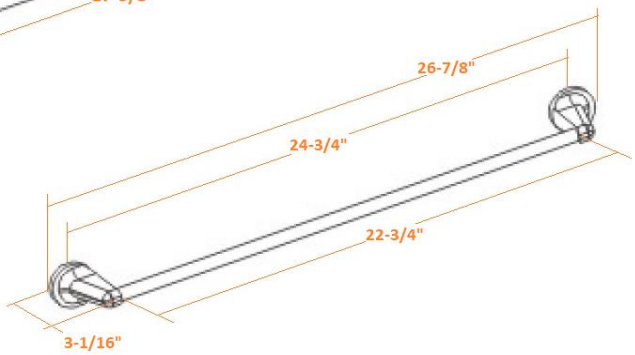

Warranty & Compliances

Warranty 1 Year Limited Warranty

Order Codes & Finishes/Colors

	18" towel bar	24" towel bar	robe hook	
Polished Chrome (US26)	558114	558122	558080	TRU MATCH
Satin Nickel (US15)	558163	558171	558130	TRU MATCH

	towel ring	tp holder	
Polished Chrome (US26)	558106	558098	TRU MATCH
Satin Nickel (US15)	558155	558148	TRU MATCH

Type:
Job:
Order Code:
Approvals:

Design House reserves the right to make changes in materials, specifications & models at any time. Design House also reserves the right to discontinue product without notice or obligation.

www.todaysdesignhouse.com

Design House is a registered brand of DHI Corp.
Mequon, WI * 800-558-8700