Assembly Instruction

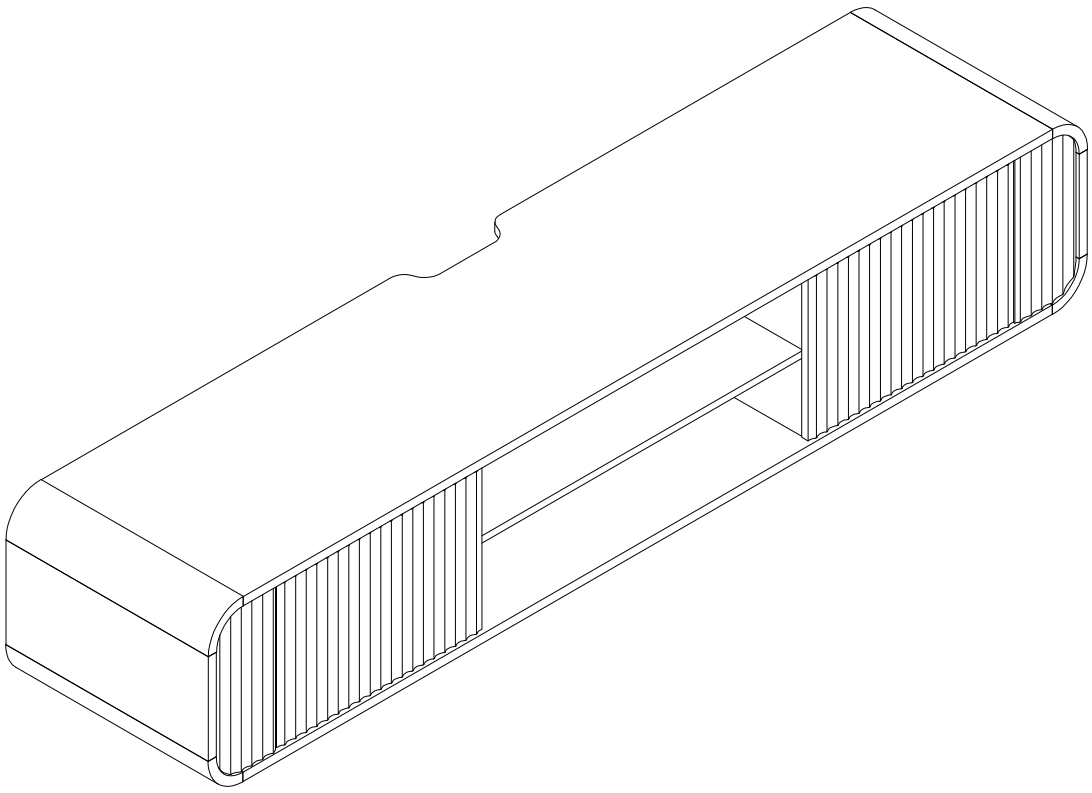

EN

General Guidelines

- Please read the following instruction carefully and use the product accordingly.
- Please keep this manual and hand it over when you transfer the product.
- This summary may not include every detail of all variations and considered steps. Please contact us when further information and help are needed.

Notes

- The product is intended for indoor use only. The product must be assembled and used in accordance with the provisions of the manual. Personal injury and/or damage to product may occur if products are used outside of their intended purposes and/or if products have been changed/modified from their original design. The seller does not assume any responsibility or liability with respect to any injury/damage caused by incorrect assembly or improper use.
- Avoid long-term exposure to humid environments to prevent mildew.
- Keep the product away from fire sources and high temperatures. Do not expose the product to direct sunlight.
- Do not place any hot objects on the surface of the product.
- If there are any defective or missing parts after unpacking, please cease assembly immediately and contact us.
- Please assemble the item on a spacious surface and do not place the unwrapped product directly on the ground to avoid product damage.
- Please do not stand or sit on the wooden boards.
- Please wear gloves during the assembly and/or disassembly process to avoid scratches from any sharp edges.
- Please match the corresponding part and fitting based on the part number in the manual.
- If the part does not match with the fitting, please check the piece as specified in this manual.
- During assembly, first loosely align all screws with the corresponding pre-drilled holes and then tighten the screws one by one.
- Periodically inspect screw tightness while the product is in use. If necessary, retighten to ensure structural integrity.
- If you accidentally spill water or another liquid on the surface, immediately wipe clean with a dry towel.
- Please keep the product away from sharp, pointed objects and corrosive substances to prevent product damage.
- Please place this item on level, solid ground during use.

Warnings

- During assembly, keep all small parts out of the reach of children. It may be fatal if swallowed or inhaled.
- Children should not climb or play on the product in order to avoid tipping over the furniture and causing serious injury.
- To avoid the potential dangers of suffocation, please keep all parts and packaging (film, plastic bags, foam, etc.) away from babies and children.
- Keep sharp objects and corrosive items away from the product to avoid any damage or injury.
- Do not shake or move violently during use to avoid tipping over the product.

Parts List(EN)

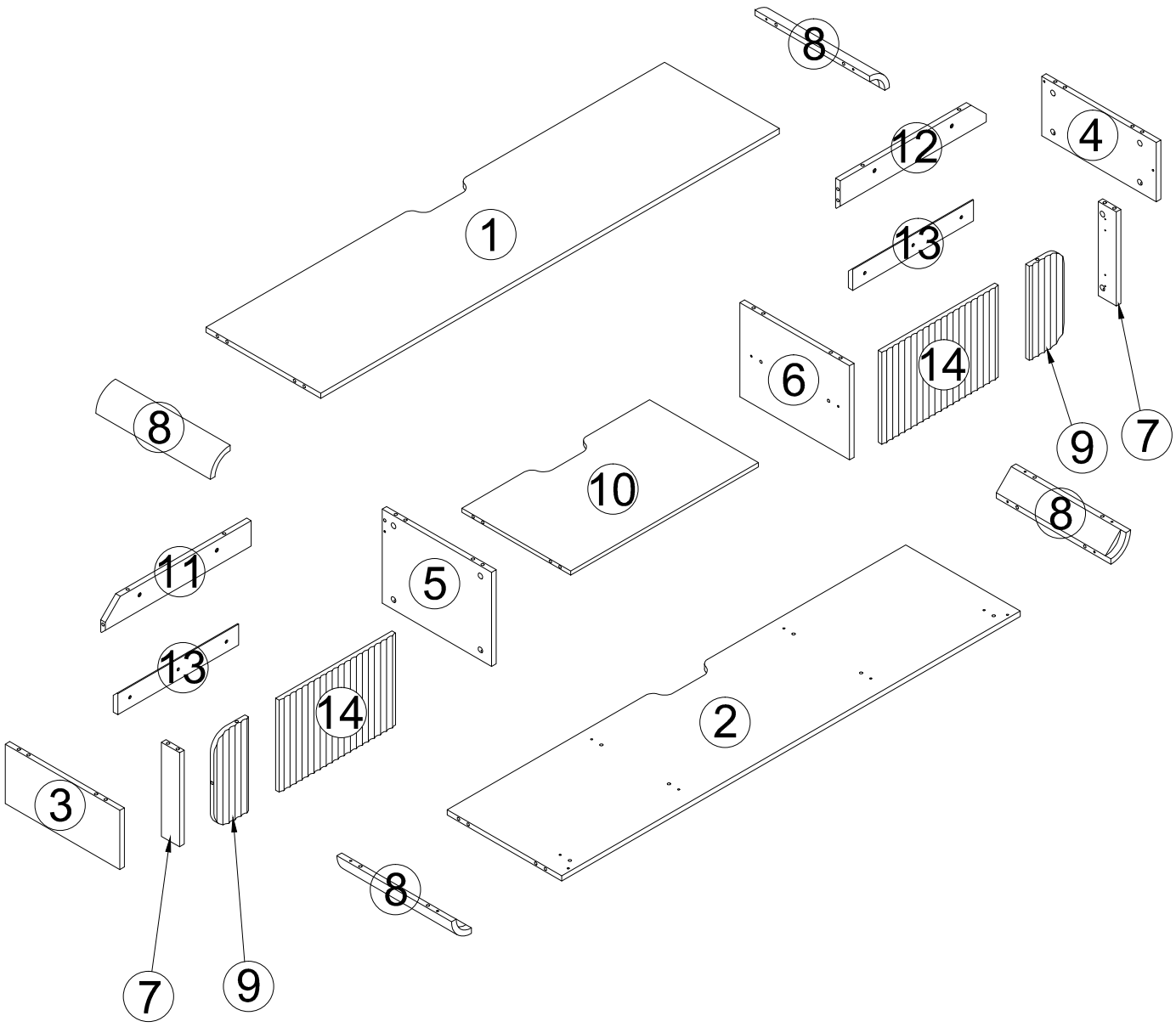

Parts List(EN)

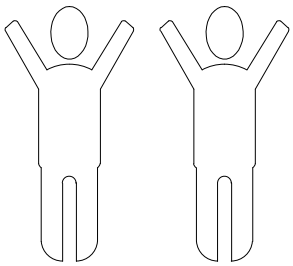

It takes two people to work together to assemble the product.

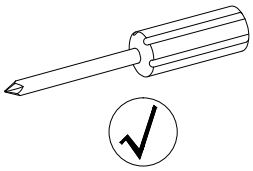

Recommended to use a screwdriver to assemble the product

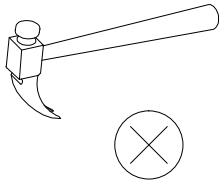

Do not use a hammer, it might damage the board.

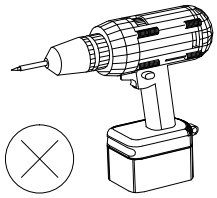

The use of an electric wrench is not recommended.If used, please set the torque to the minimum.

1 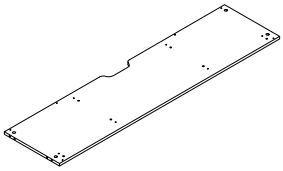 1PC	2 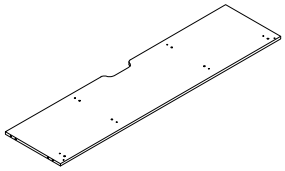 1PC	3 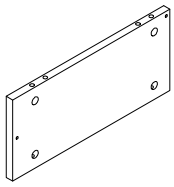 1PC	4 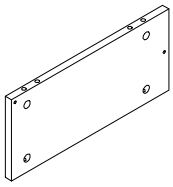 1PC
5 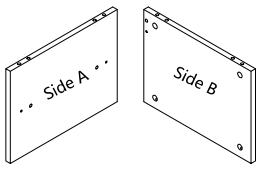 1PC	6 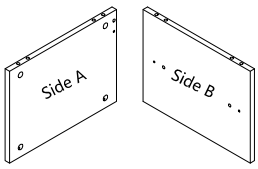 1PC	7  2PCS	8 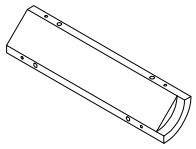 4PCS
9 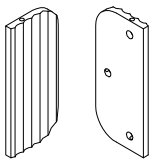 2PCS	10 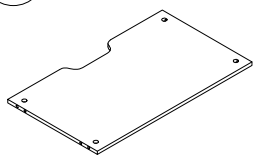 1PC	11 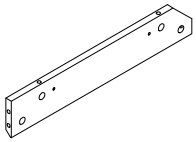 1PC	12 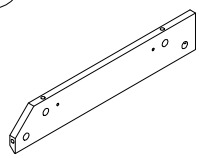 1PC
13 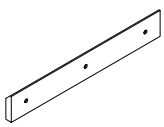 2PCS	14 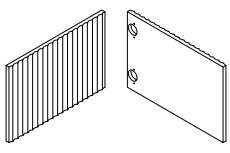 2PCS		

Parts List(EN)

No. A Quantity:46+3 Pcs Cam Lock Dowel 8*28mm 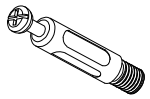	No. B Quantity:46+3 Pcs Cam φ15 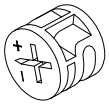	No. C Quantity:20+4 Pcs Sticker Ø20 	No. D Quantity:34+2 Pcs Dowel 8*30mm 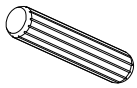
No. E Quantity:4 Pcs Large curved door hinge 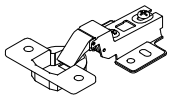	No. F Quantity:24+2 Pcs Screw M3.5*12mm 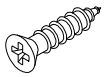	No. G Quantity:10+1 Pcs Expansion bolt M8*40mm 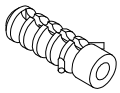	No. H Quantity:10+1 Pcs Screw M5*60mm 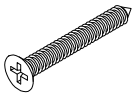
No. I Quantity:1 Pc Screwdriver 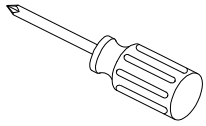			

Instructions For Fastening
CAM-BOLT and CAM-LOCK

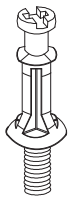

CAM-BOLT



CAM-LOCK

Tools Required

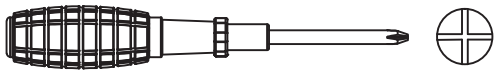

INSERTING AND TIGHTENING CAM-BOLT

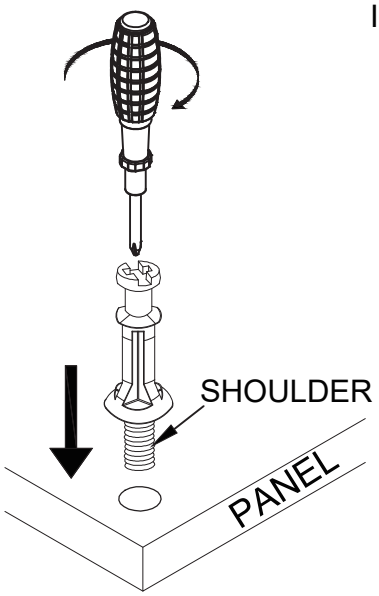

Place Cam-bolt on pre-drilled hole and screw in vertically

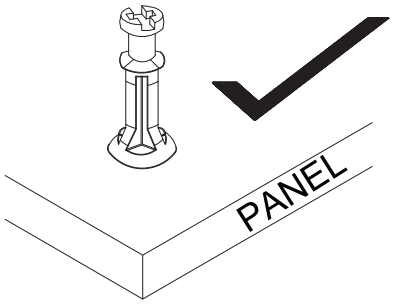

Shoulder is flushed (on the same level) with the panel.

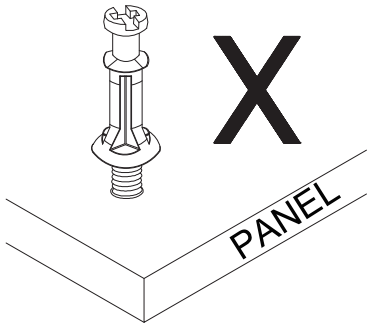

Shoulder is above the panel.

Place Cam-bolt on the designated pre-drilled holes on the panel. Use a Phillips Screwdriver to screw-in Cam-bolt vertically until shoulder is flushed (on the same level) with panel.

INSERTING CAM-LOCK

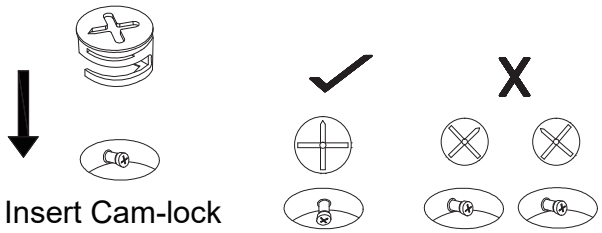

Insert Cam-lock with arrow align to Cam-bolt head

CORRECT

WRONG

Align the arrow on the Cam-lock to the Cam-bolt head and insert the Cam-lock. Ensure Cam-lock is fully inserted.

TIGHTENING CAM-LOCK

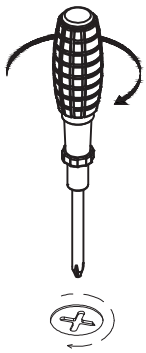

Use a Flat-head Screwdriver to turn Camlock clockwise so it locks onto the head of the Cam-bolt. Turn until it is snug (about 3/4ths of a turn) -- over-tightening could damage Cam-lock or/and Cam-bolt.

STEP 1

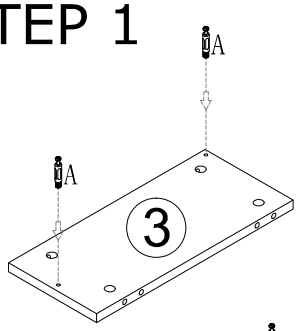

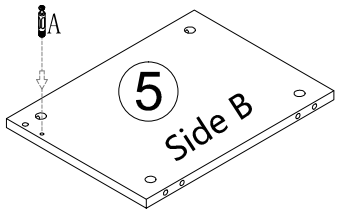

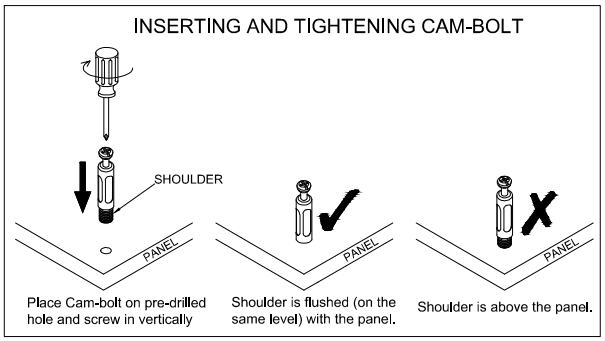

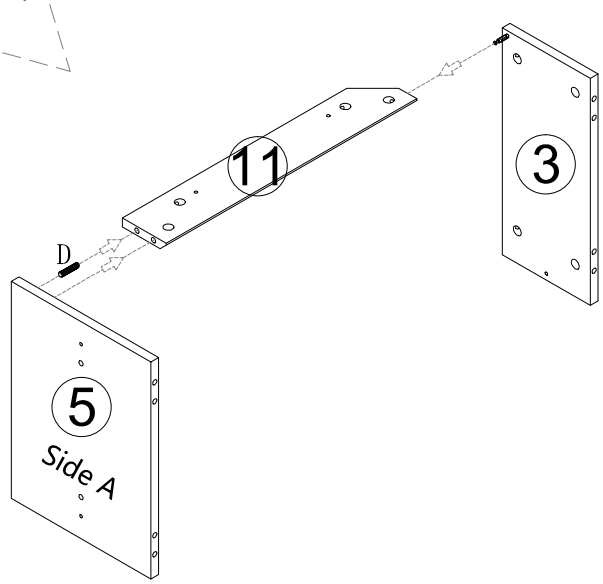

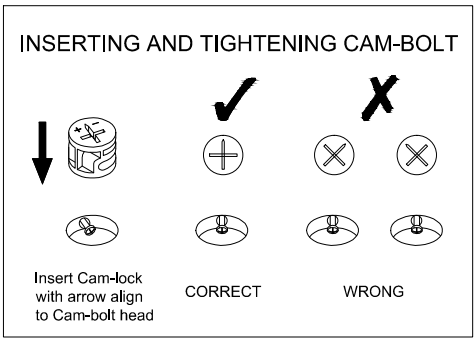

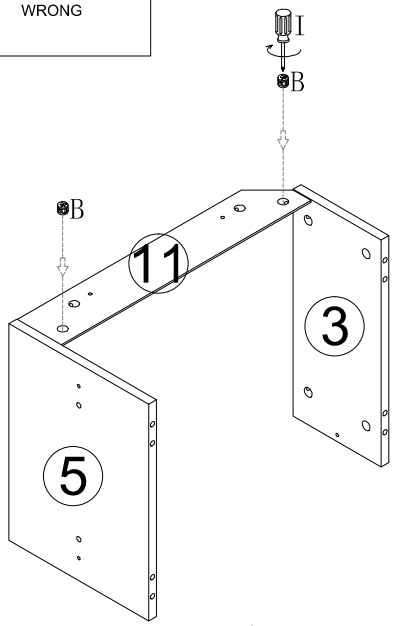

Align the arrow on the Cam-lock to the Cam-bolt head and insert the Cam-lock. Ensure Cam-lock is fully inserted.

	A×3PCS
	B×2PCS
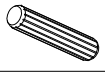	D×1PC

STEP 2

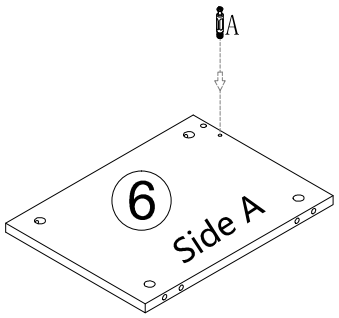

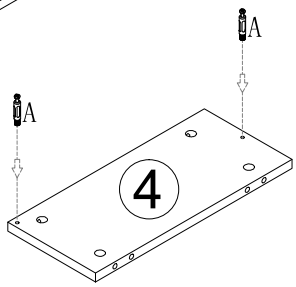

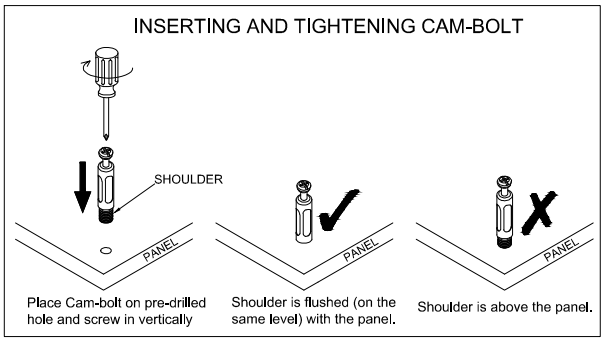

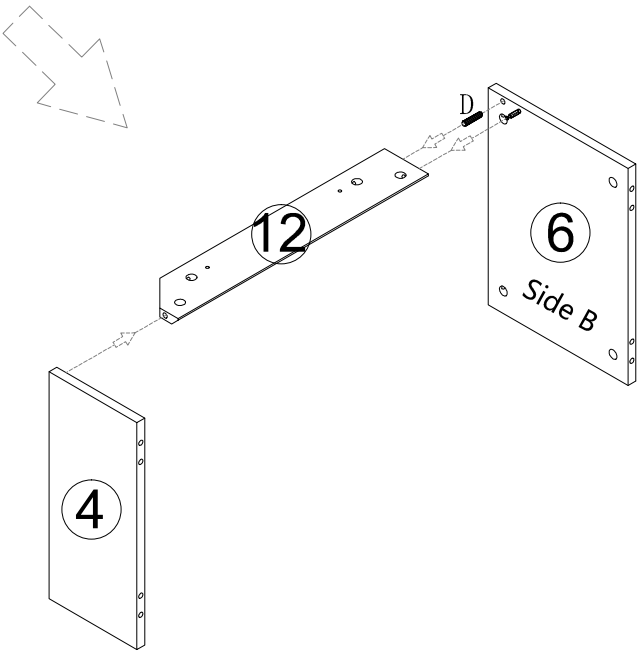

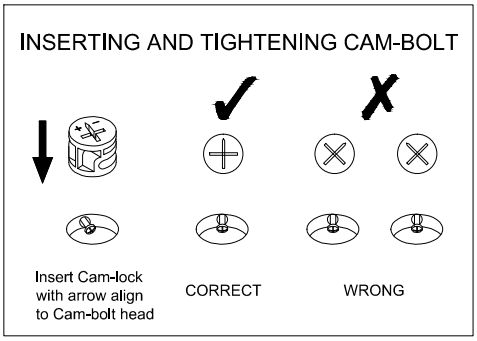

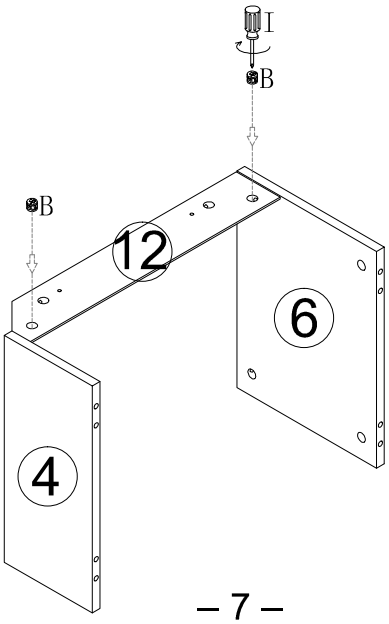



Align the arrow on the Cam-lock to the Cam-bolt head and insert the Cam-lock. Ensure Cam-lock is fully inserted.

	A×3PCS
	B×2PCS
	D×1PC

STEP 3

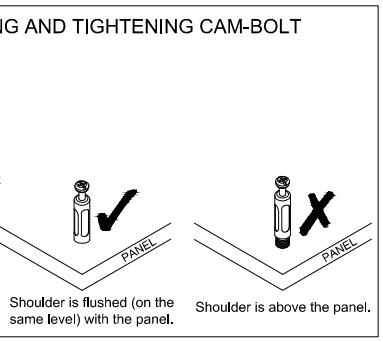

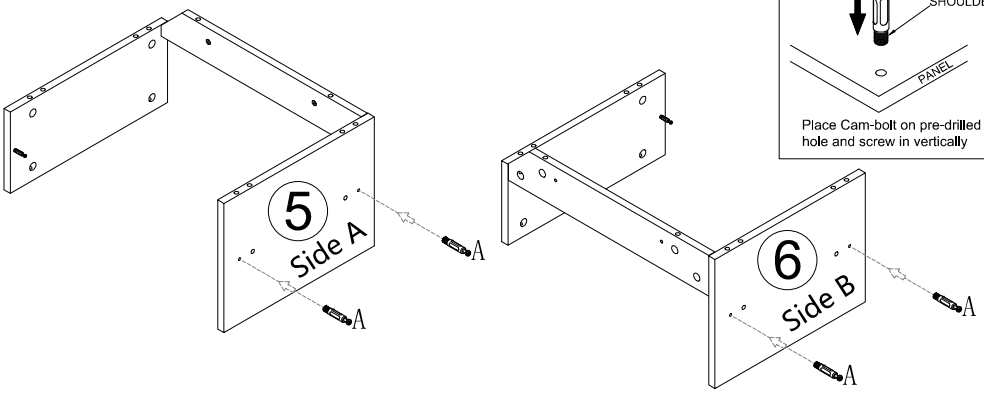

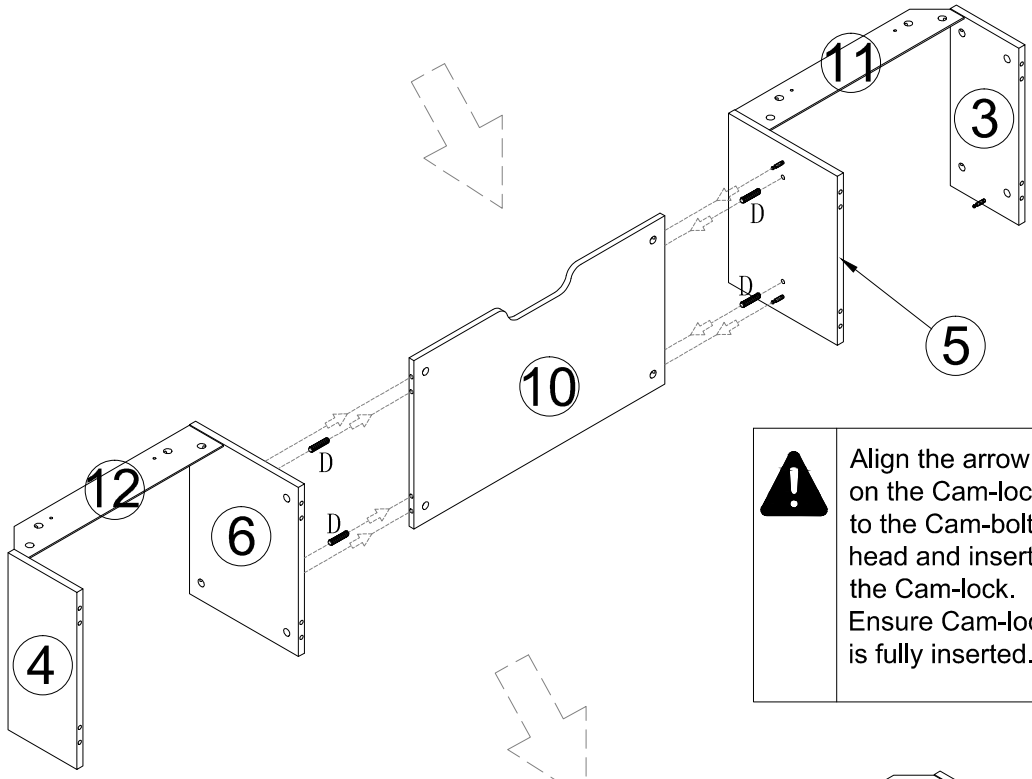

Align the arrow on the Cam-lock to the Cam-bolt head and insert the Cam-lock. Ensure Cam-lock is fully inserted.

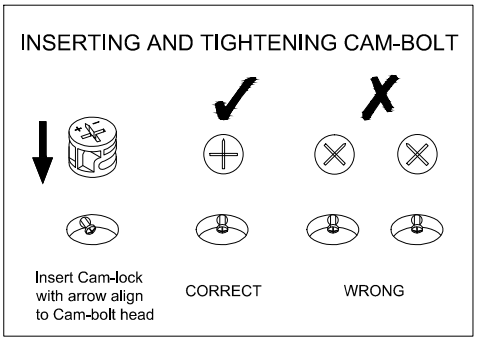

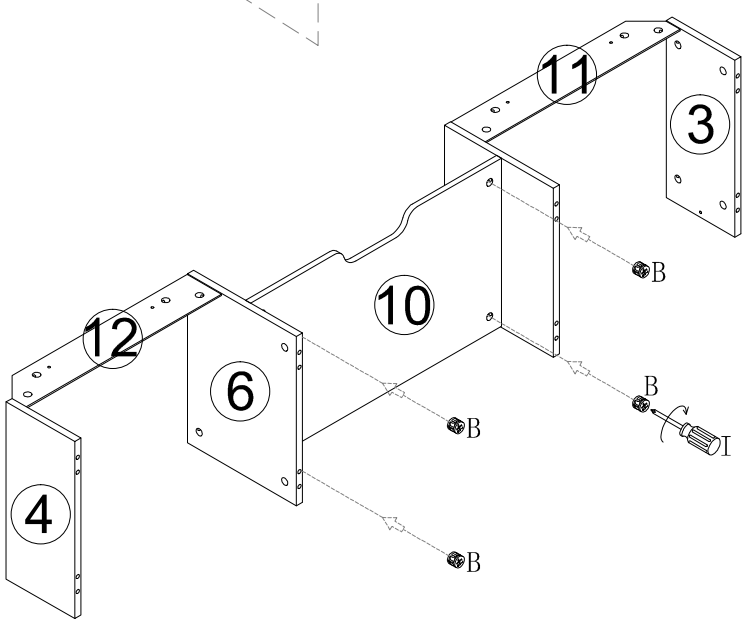

	A×4PCS
	B×4PCS
	D×4PCS

STEP 4

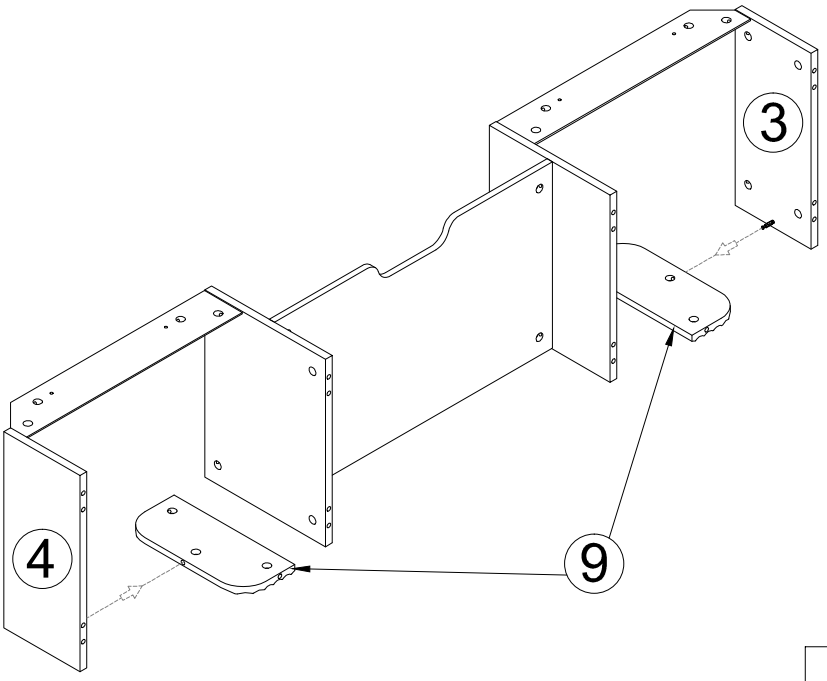

Align the arrow on the Cam-lock to the Cam-bolt head and insert the Cam-lock. Ensure Cam-lock is fully inserted.

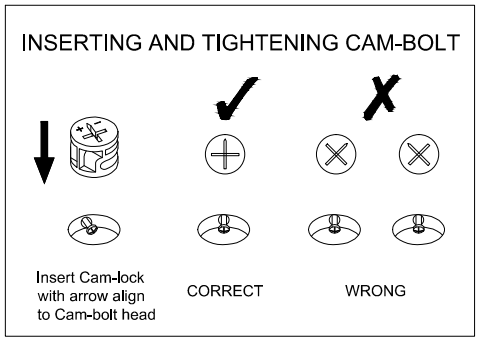

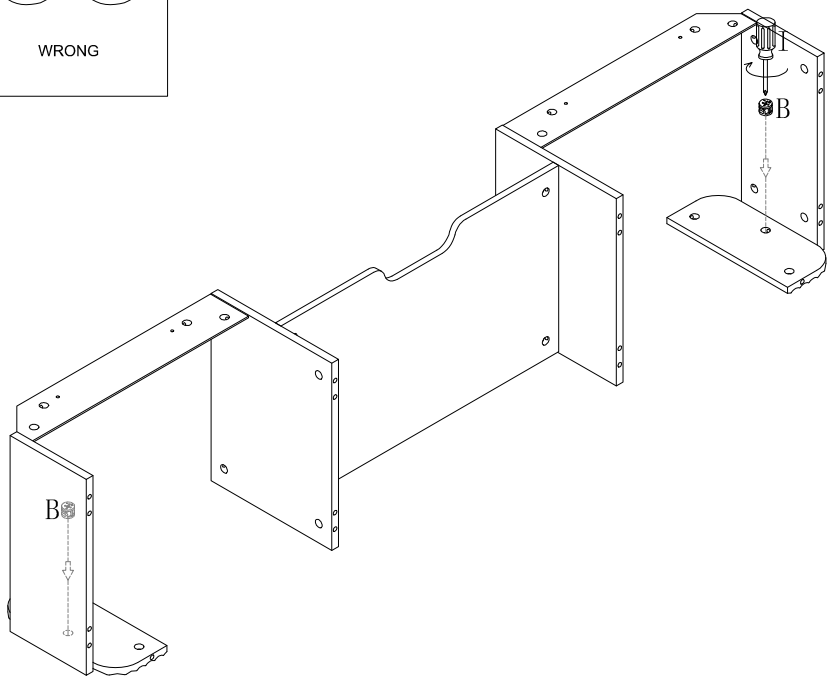

	B×2PCS

STEP 5

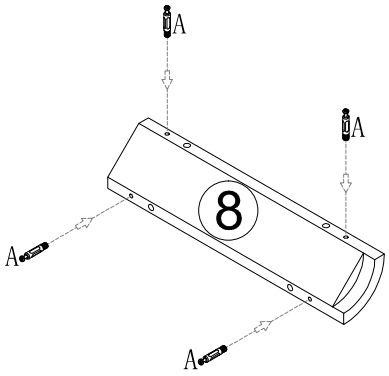

×4

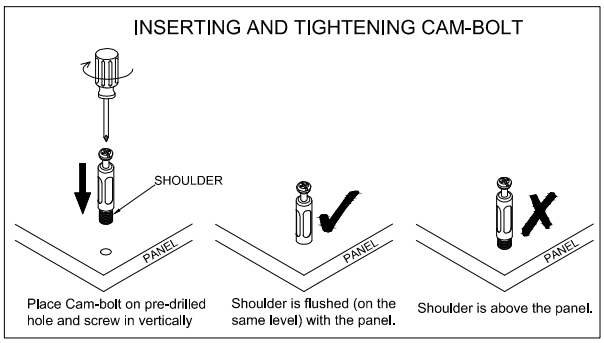

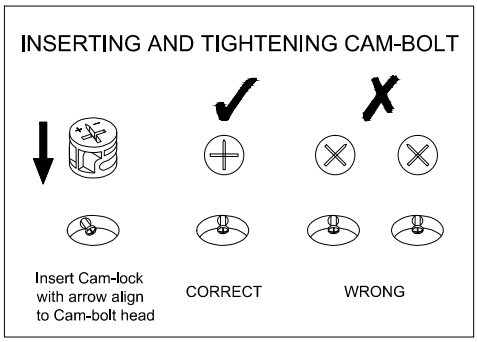

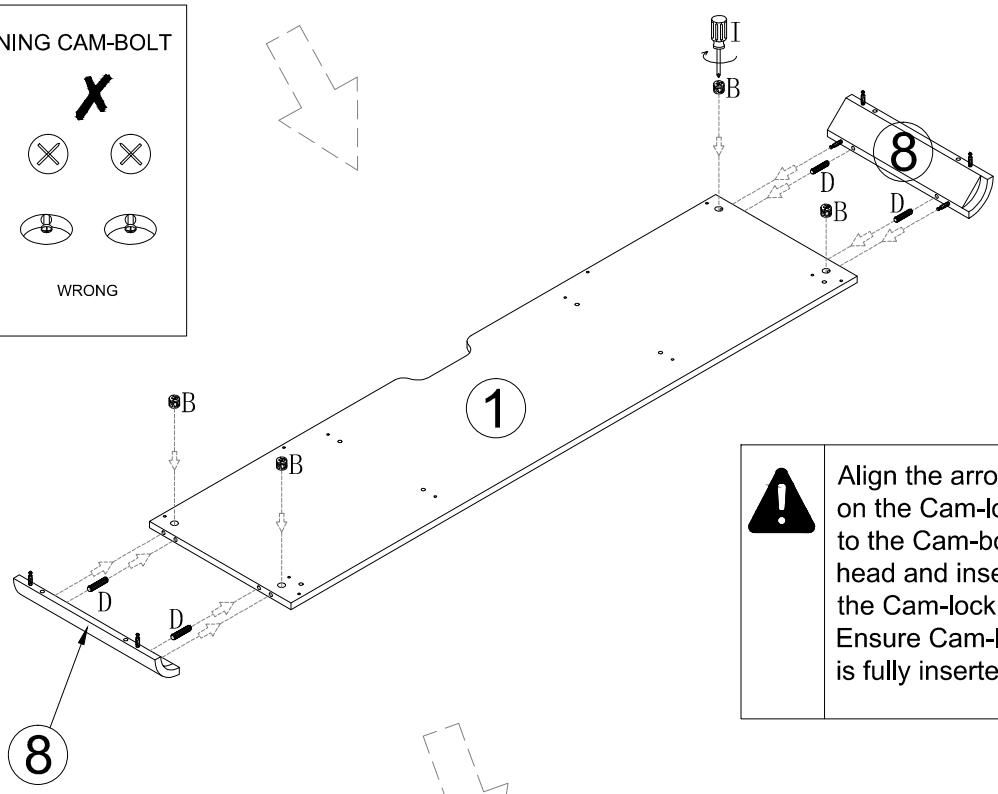

Align the arrow on the Cam-lock to the Cam-bolt head and insert the Cam-lock. Ensure Cam-lock is fully inserted.

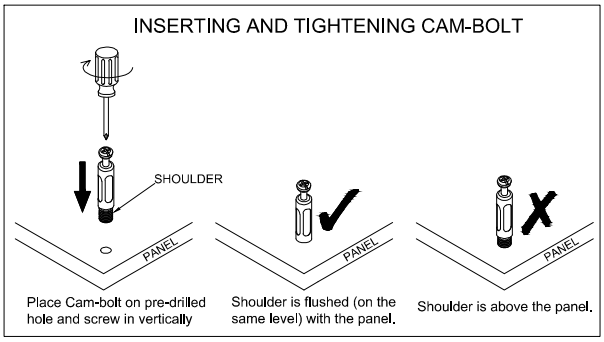

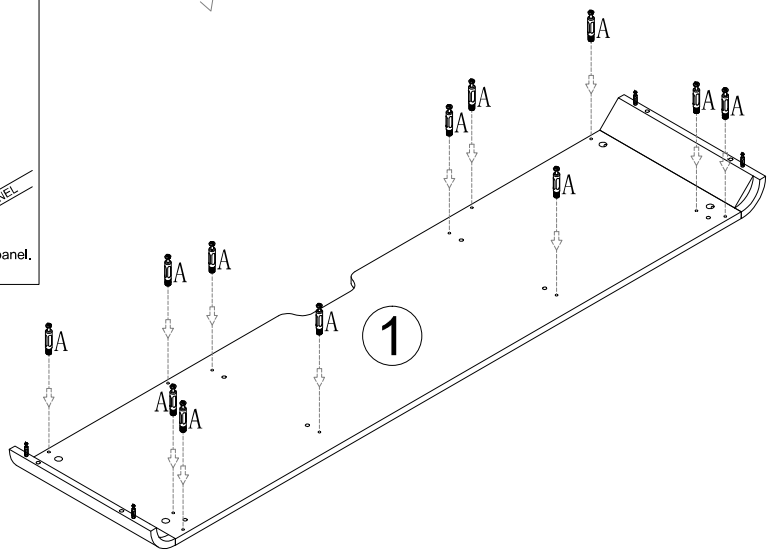

	A×28PCS
	B×4PCS
	D×4PCS

STEP 6

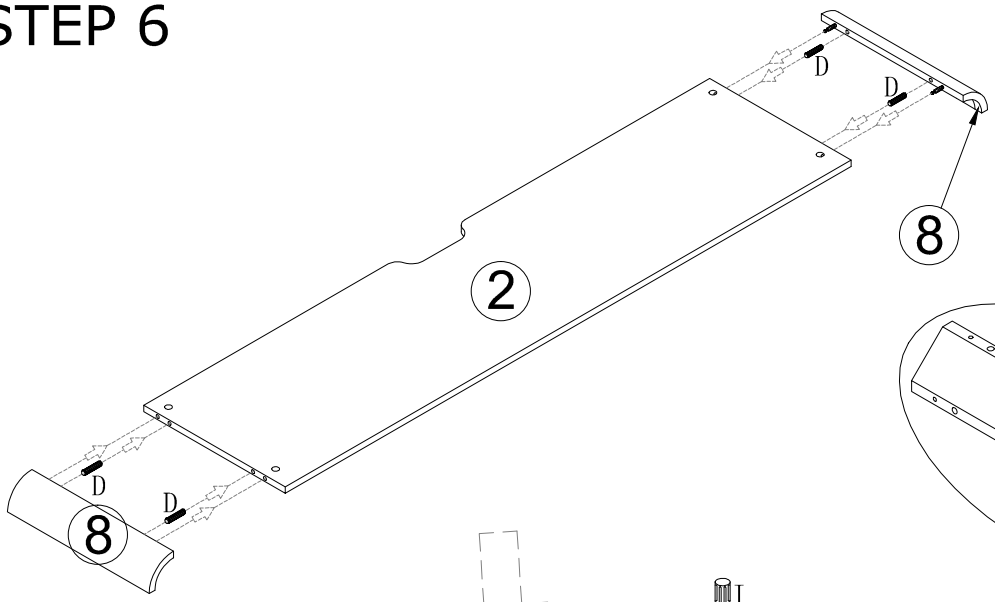

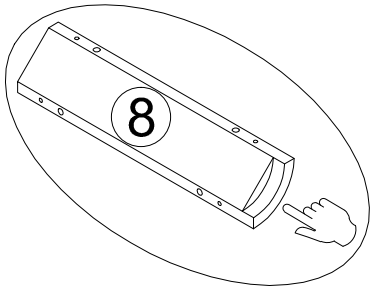

Please note during installation that the side with the notch should face forward, otherwise it will cause the subsequent cabinet to be unable to be installed and used.

Align the arrow on the Cam-lock to the Cam-bolt head and insert the Cam-lock. Ensure Cam-lock is fully inserted.

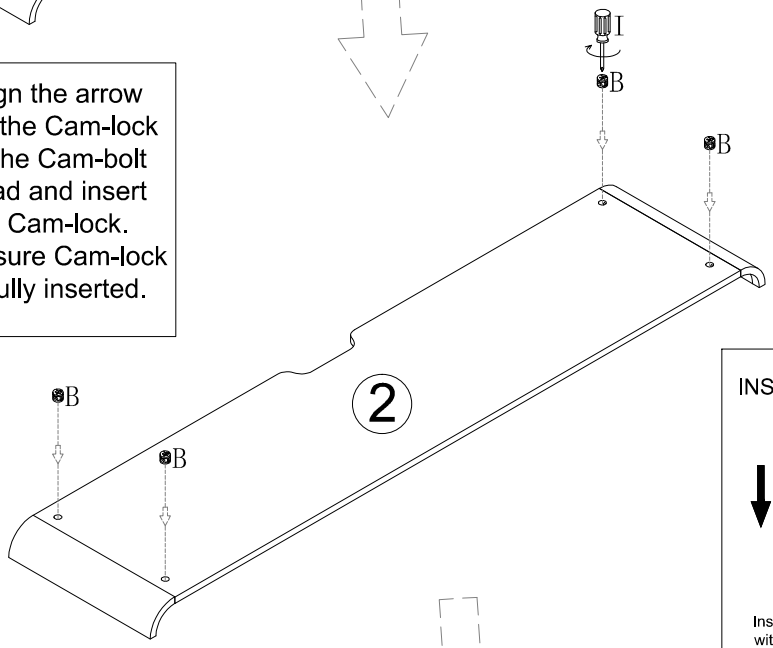

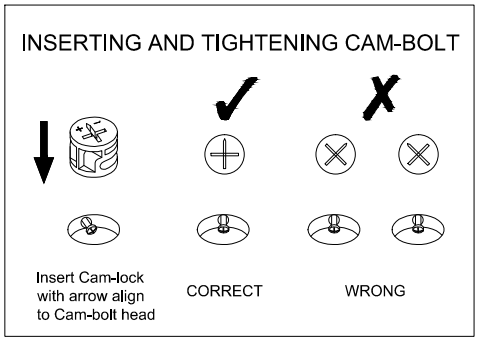

Flip to the other side.

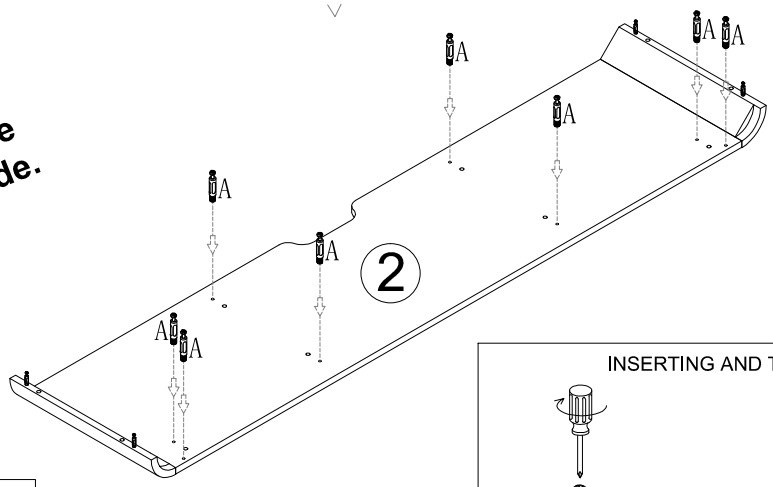

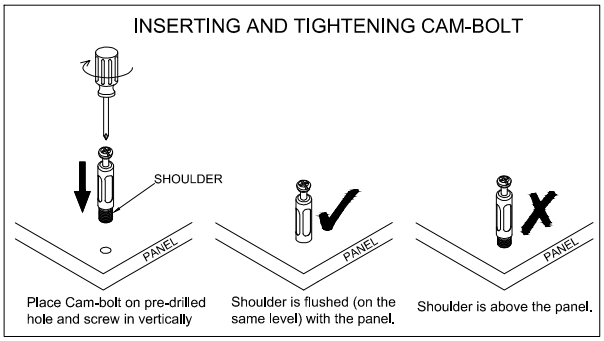

	A×8PCS
	B×4PCS
	D×4PCS

STEP 7

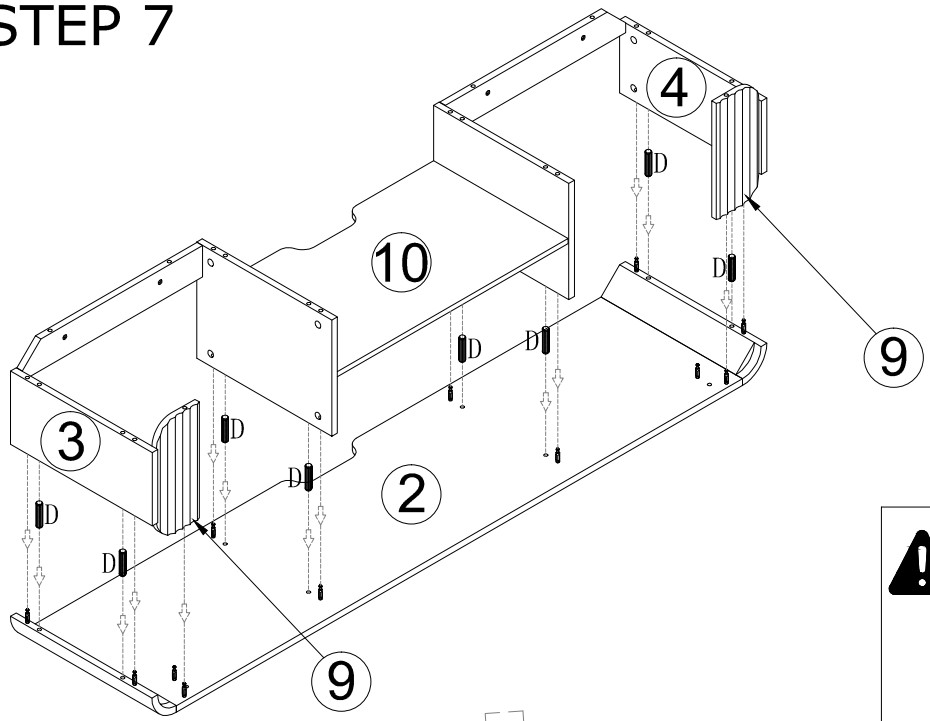

Align the arrow on the Cam-lock to the Cam-bolt head and insert the Cam-lock. Ensure Cam-lock is fully inserted.

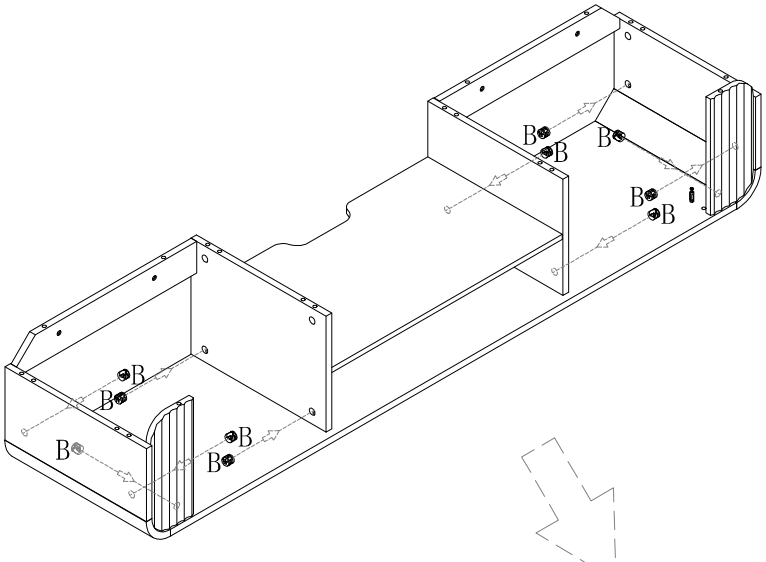

INSERTING AND TIGHTENING CAM-BOLT

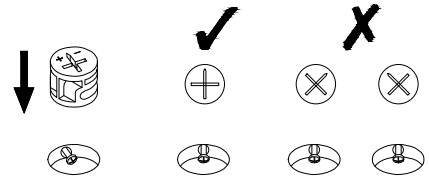

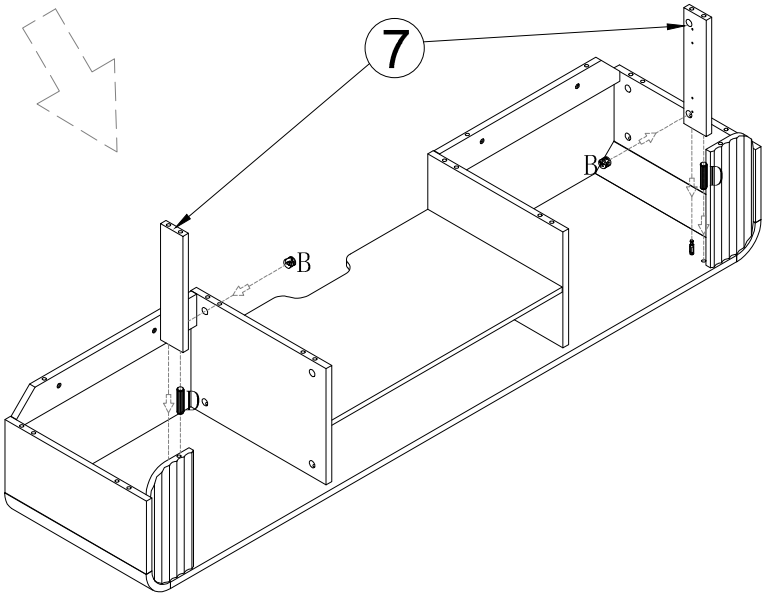

	B×12PCS
	D×10PCS

STEP 8

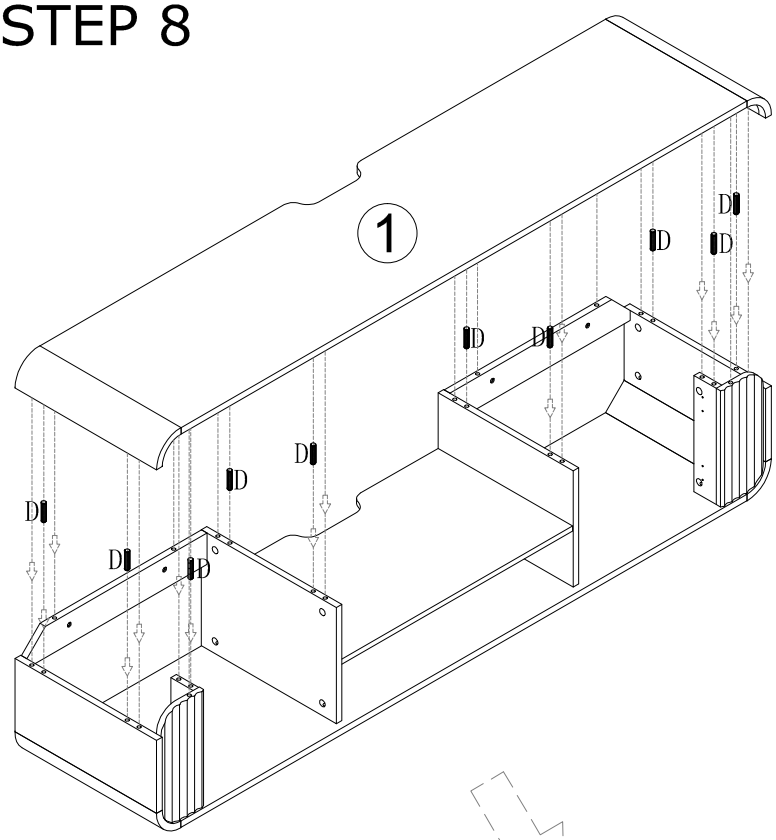

Align the arrow on the Cam-lock to the Cam-bolt head and insert the Cam-lock. Ensure Cam-lock is fully inserted.

INSERTING AND TIGHTENING CAM-BOLT

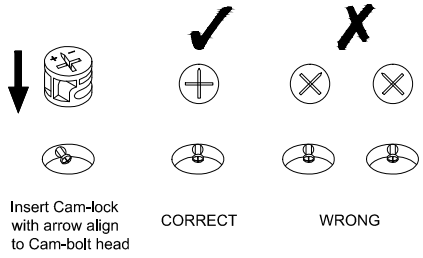

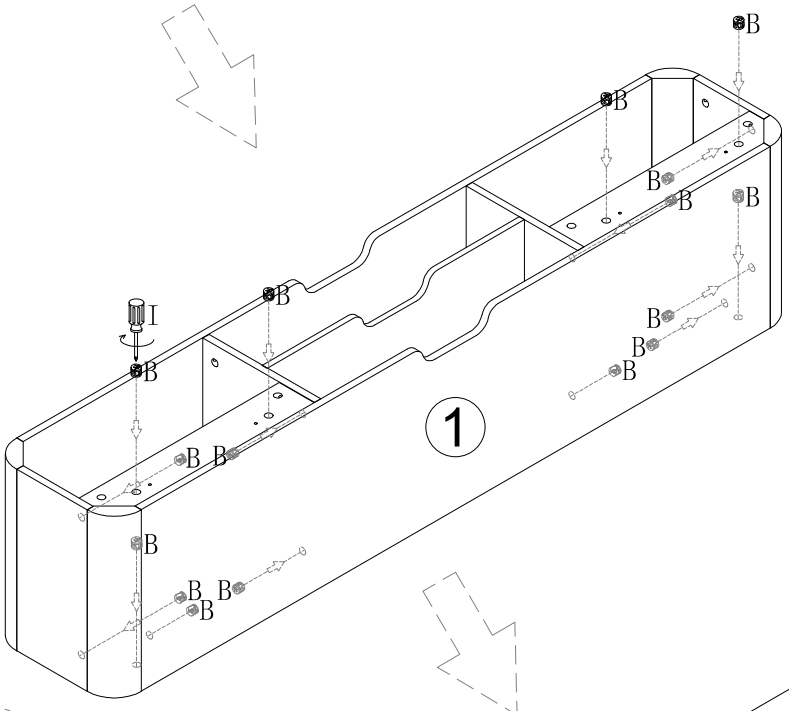

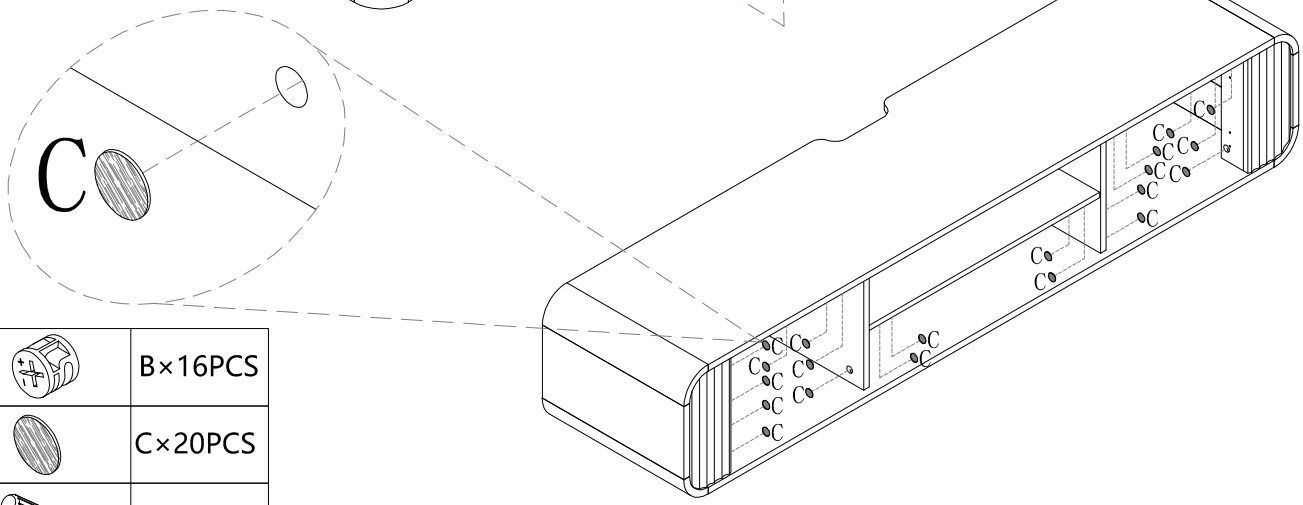

	B×16PCS
	C×20PCS
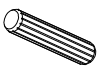	D×10PCS

Hinge Adjustment (Door Alignment)

Scan the QR code to watch the hinge adjustment video.

If you notice any of the issues below, follow these steps:

Front screw: Adjusts the gap between the door and the side panel (left/right).

Rear screw: Adjusts the door position front-to-back (in/out)

9-A.When the door panel is higher than the side panel.

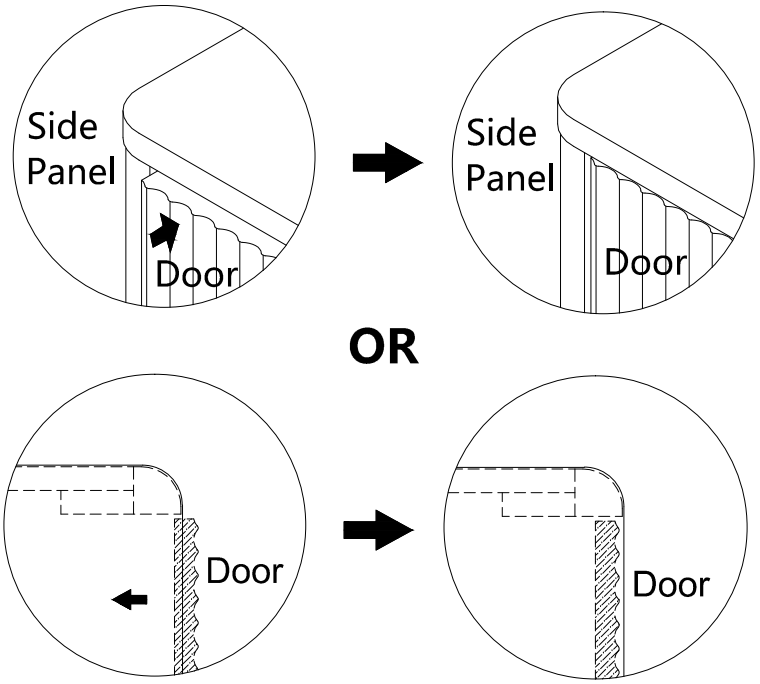

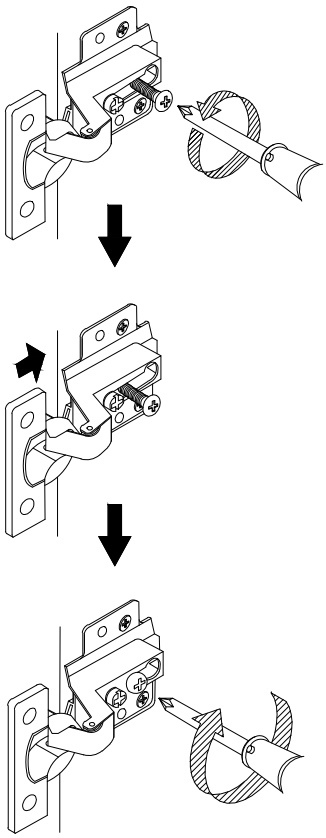

If the gap is too big between side panel and door or the door is over the edge of side panel, loosen the back screw as shown, then move in the door with hinge and tighten the back screw as shown when the gap is just well.

9-B.When the door panel is lower than the side panel, an indentation occurs.

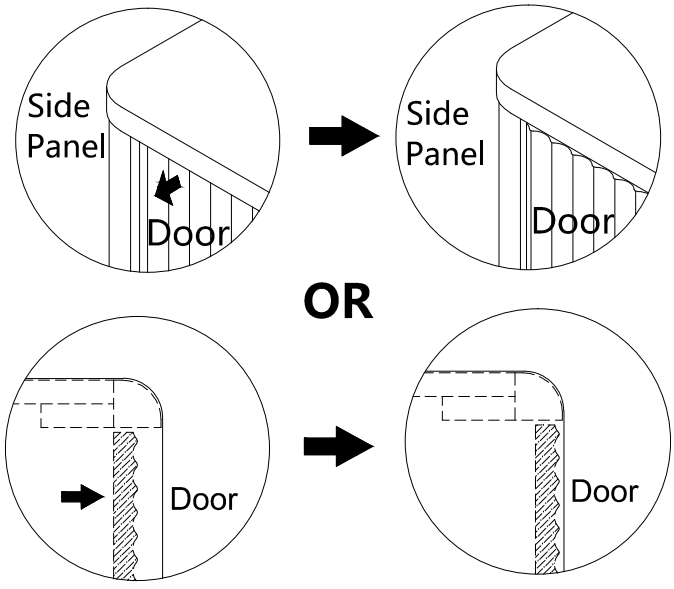

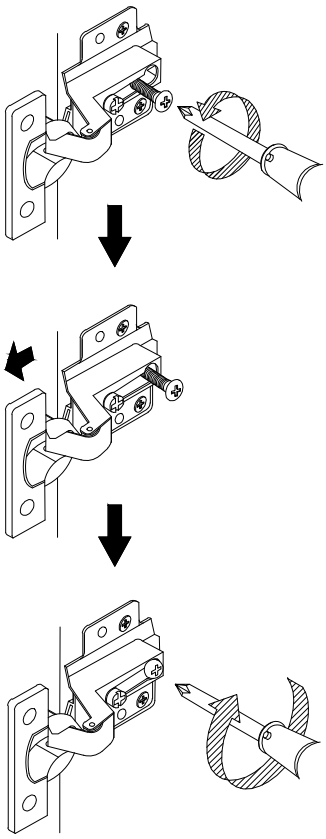

If the gap is too small between side panel and door or the door sank in side panel, loose the back screw as shown, then move out the door with hinge and tighten the back screw as shown when the gap is just well.

9-C

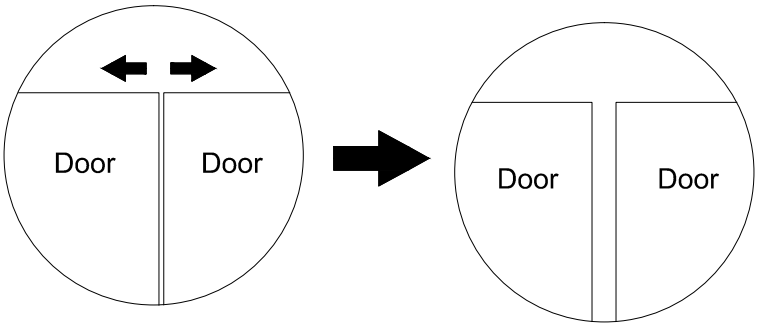

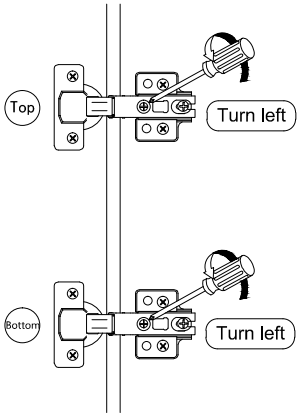

If the gap between the two doors is too small, follow the diagram.

9-D

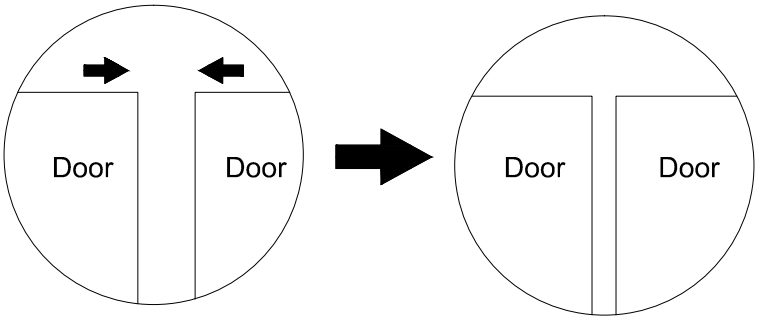

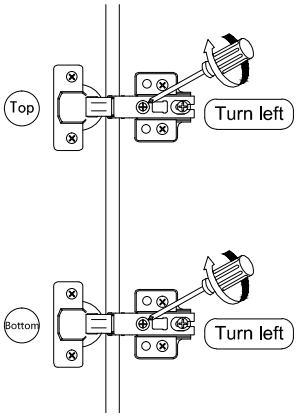

If the gap between the two doors is too large, follow the diagram.

9-E

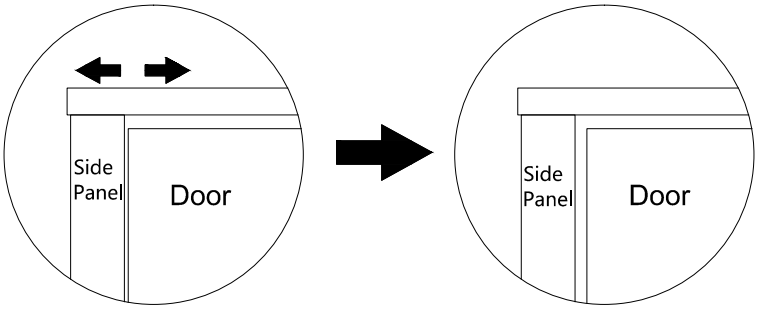

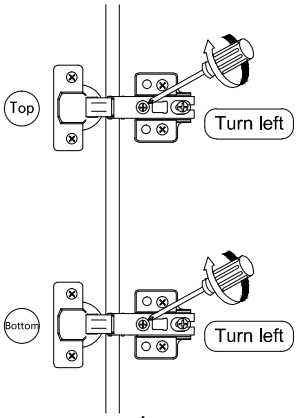

If the gap between the door and the side panel is too small, loose the front screw as shown.

9-F

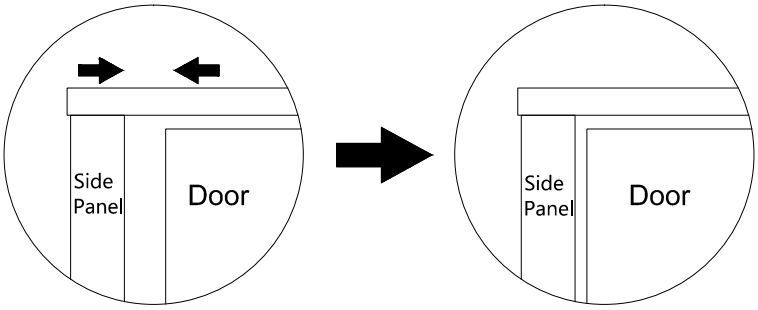

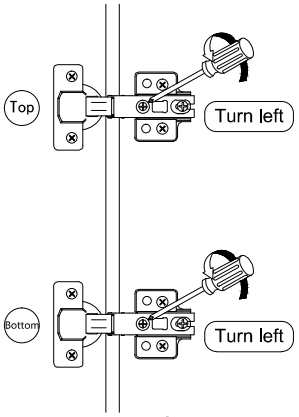

If the gap between the door and the side panel is too large, tighten the front screw as shown.

9-G. When door is leaning

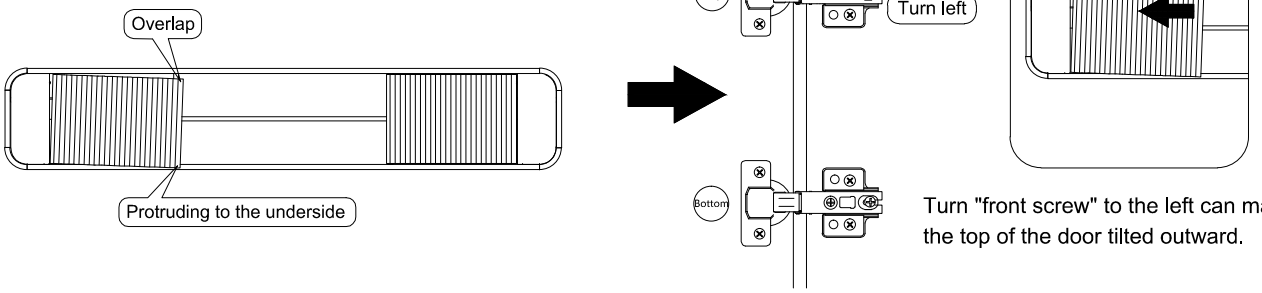

Turn "front screw" to the left can make the top of the door tilted outward.

9-H. When door is leaning

Turn "front screw" to the left can make the bottom of the door tilted outward.

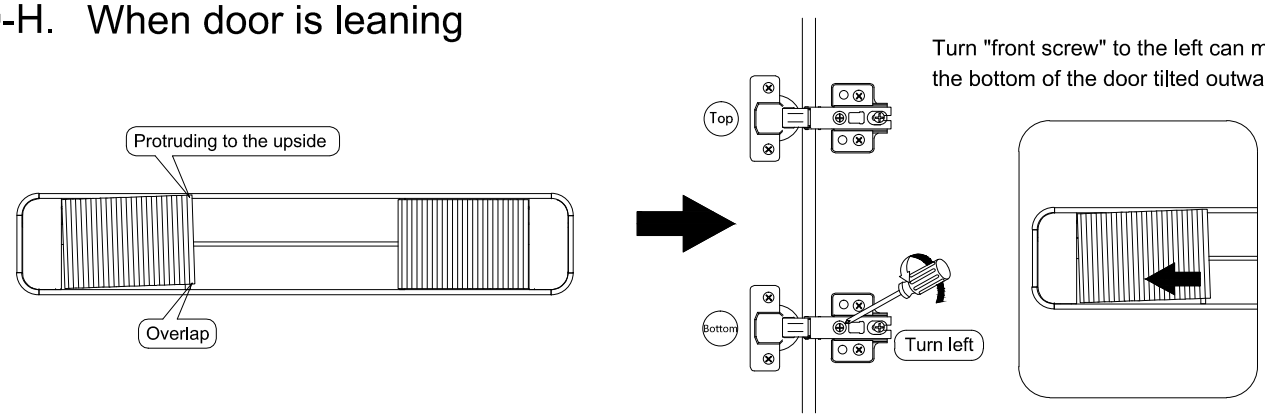

9-I. When the door is higher on top

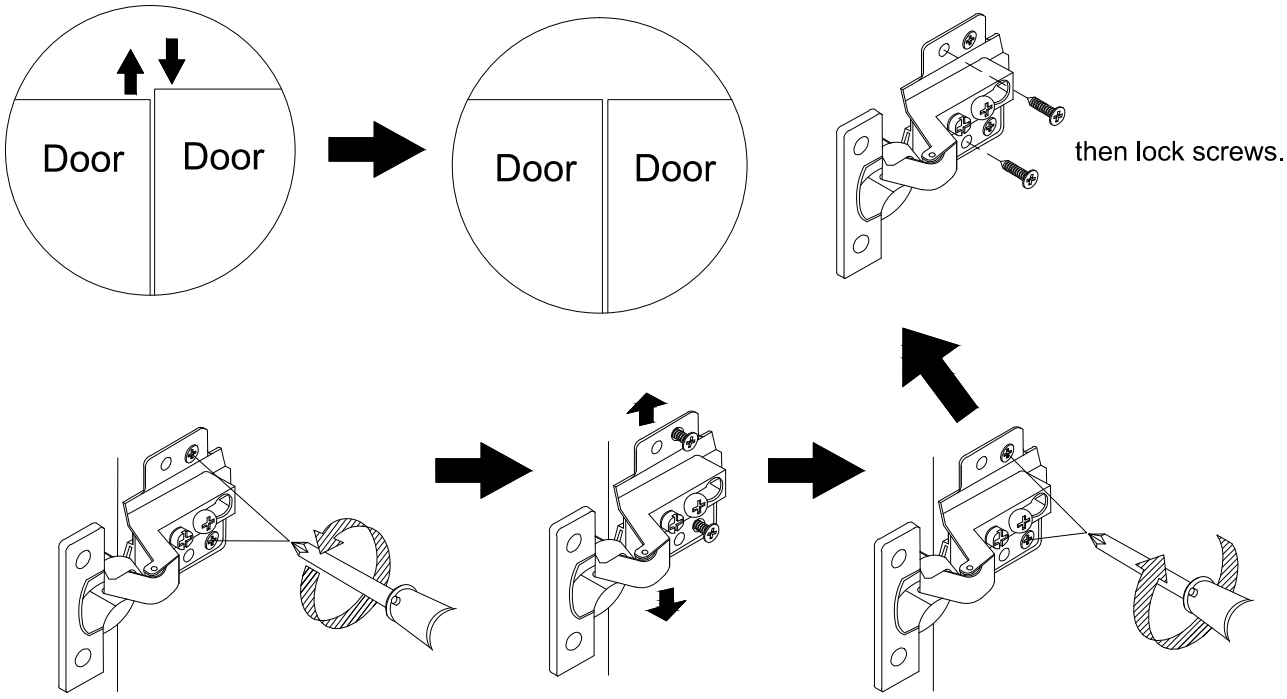

then lock screws.

If the doors are not in the same level, loosen the back screws on wing, then adjust the door up and down,tighten the screws when both doors are in same level. Screw front two screws on wing when all are in place.

STEP 10

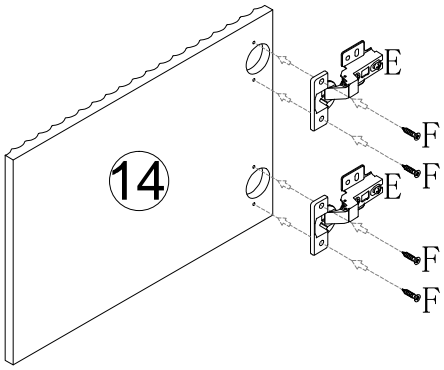

×2

Before installing the door panels, please study and read the following s teps. For possible problems, we have given some suggestions to solve the problems you encounter.

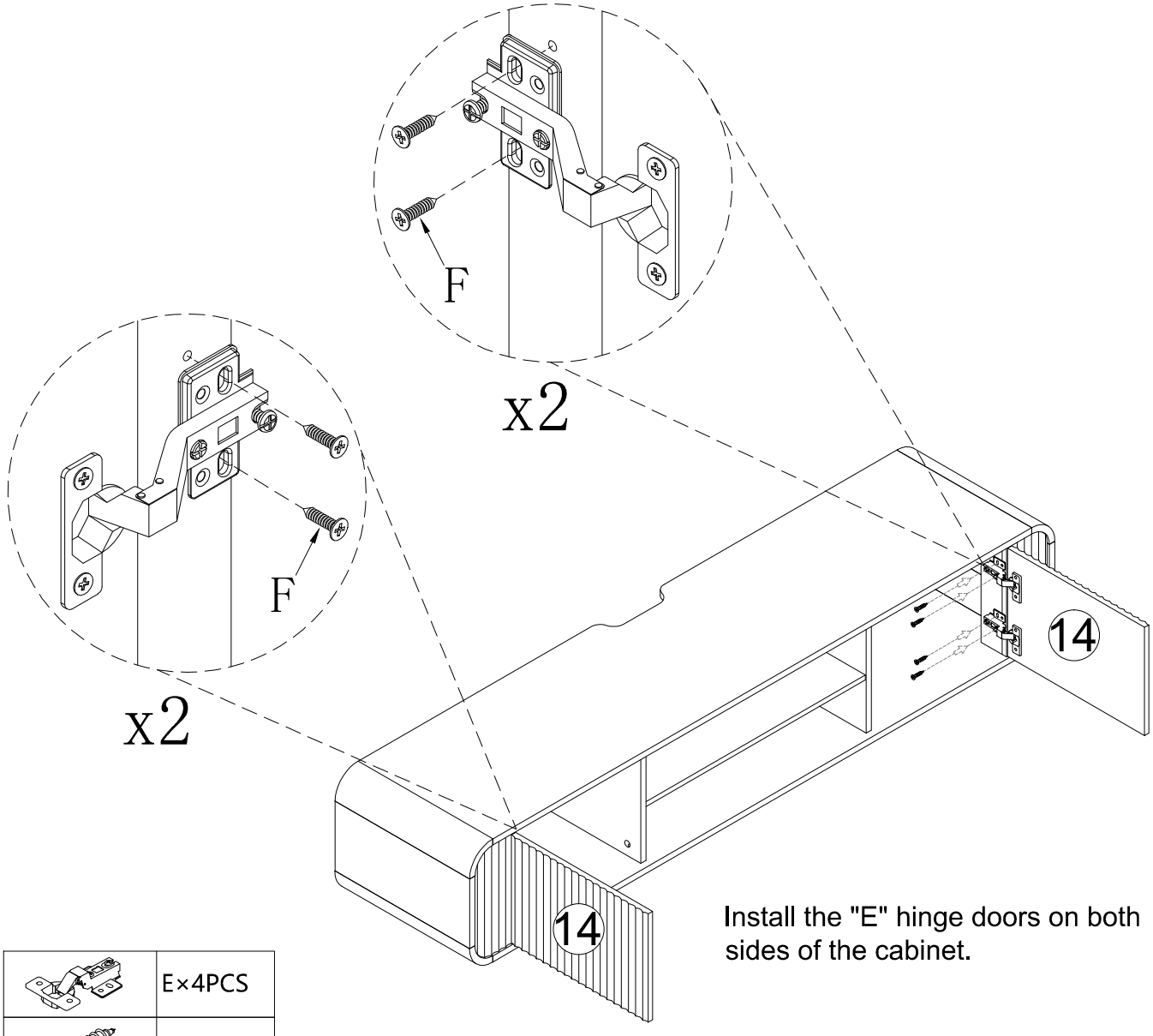

Install the "E" hinge doors on both sides of the cabinet.

	E×4PCS
	F×16PCS

STEP 11

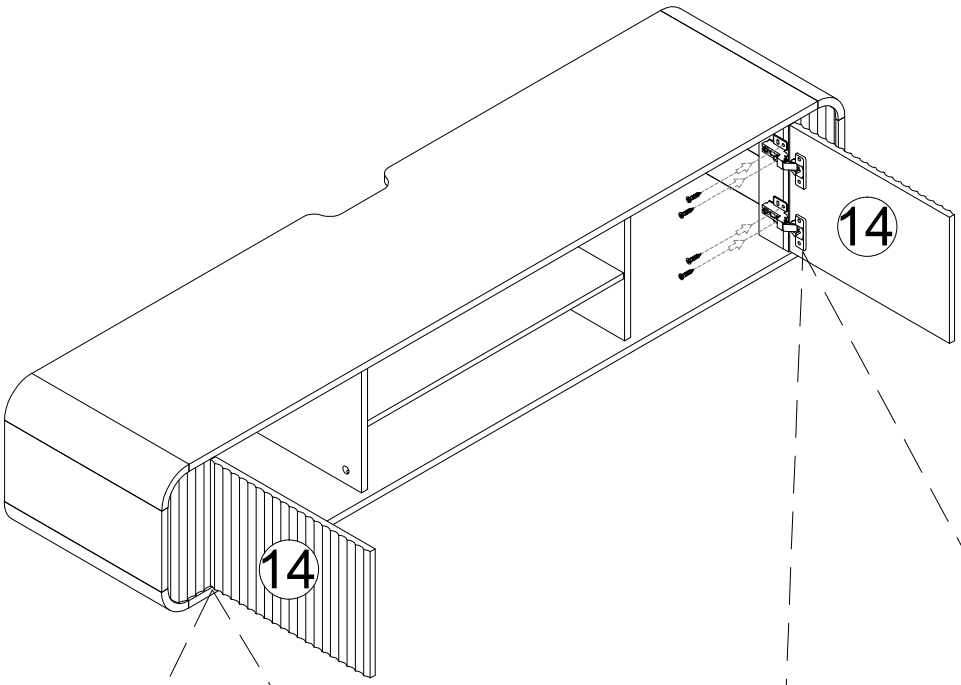

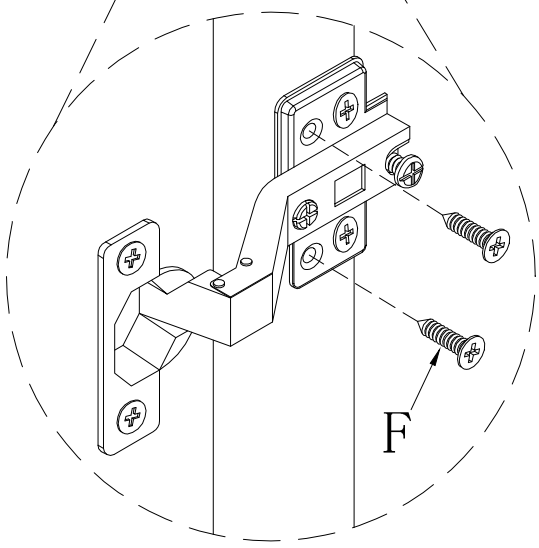

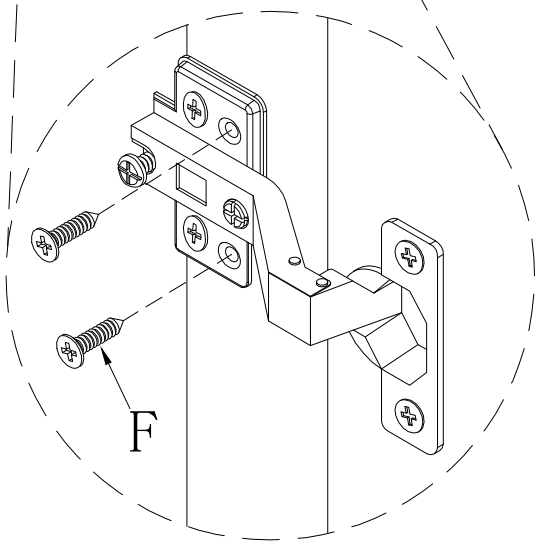

x4

⚠	Tighten the screws when both doors are in same level. Screw front two screws on wing when all are in place

NOTE:

If there is a large gap in the installation of the door, you can return to page 16 or page 18 to view the installation video and installation tutorial.

	F×8PCS

STEP 12

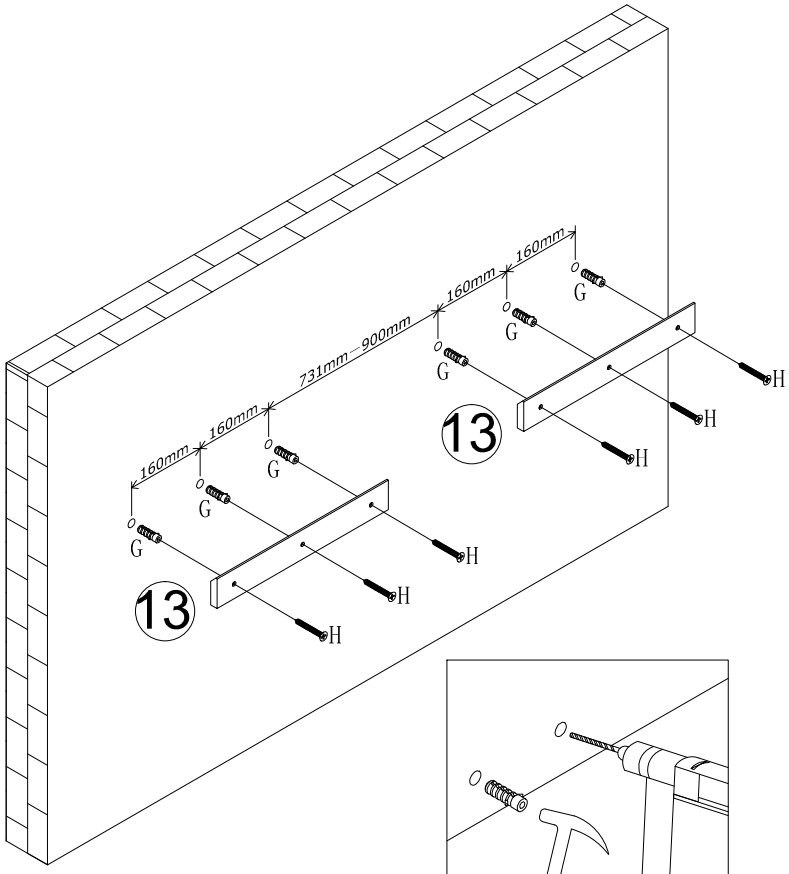

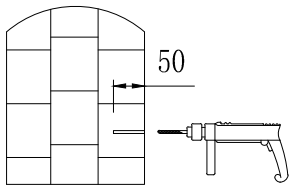

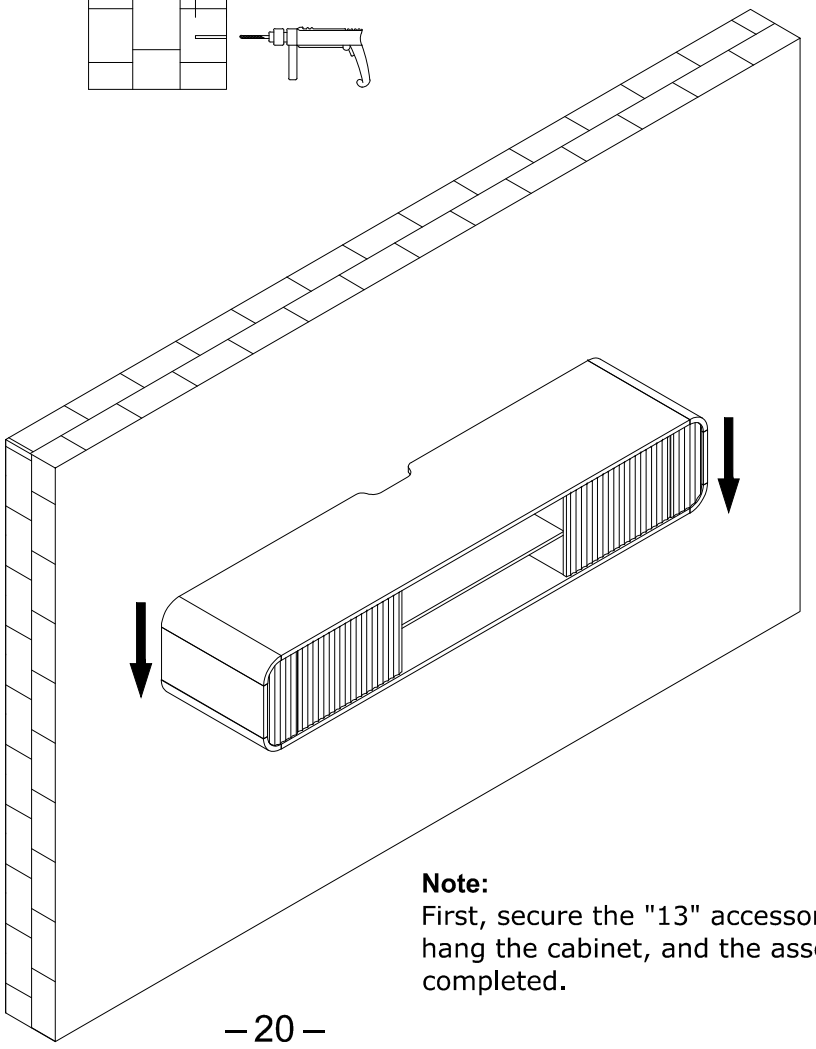

	G×6PCS
	H×6PCS

Note:
First, secure the "13" accessories, then hang the cabinet, and the assembly is completed.

STEP 13

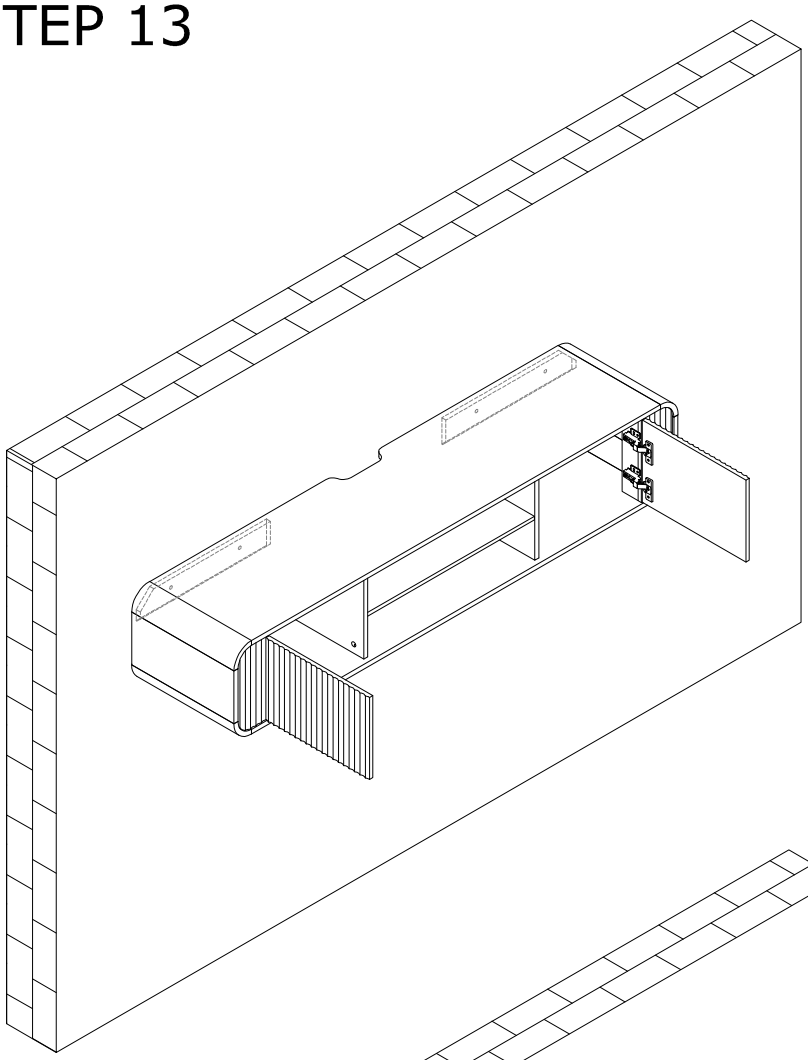

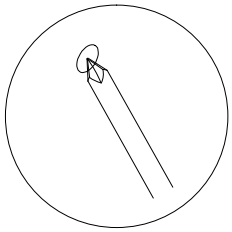

After installing the TV cabinet and placing it against the wall, first use a pencil to mark the holes that need to be drilled through the cabinet for fixing.

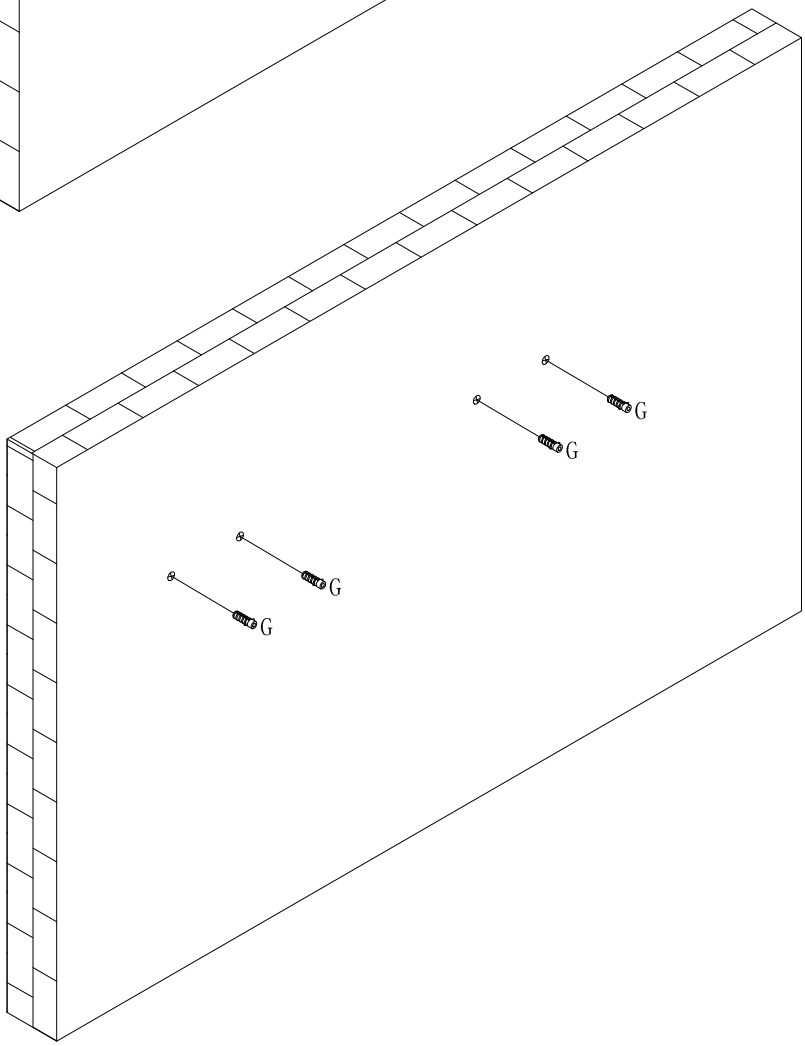

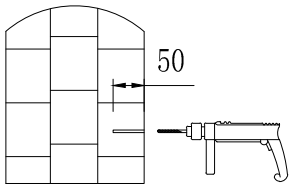

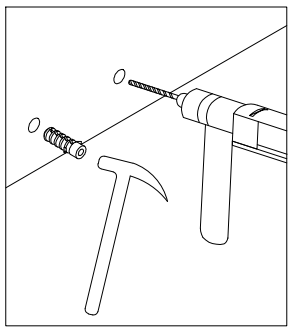

Then first take down the TV cabinet, and drill holes at the newly marked positions according to the steps, installing the expansion screws.

	G×4PCS

STEP 14

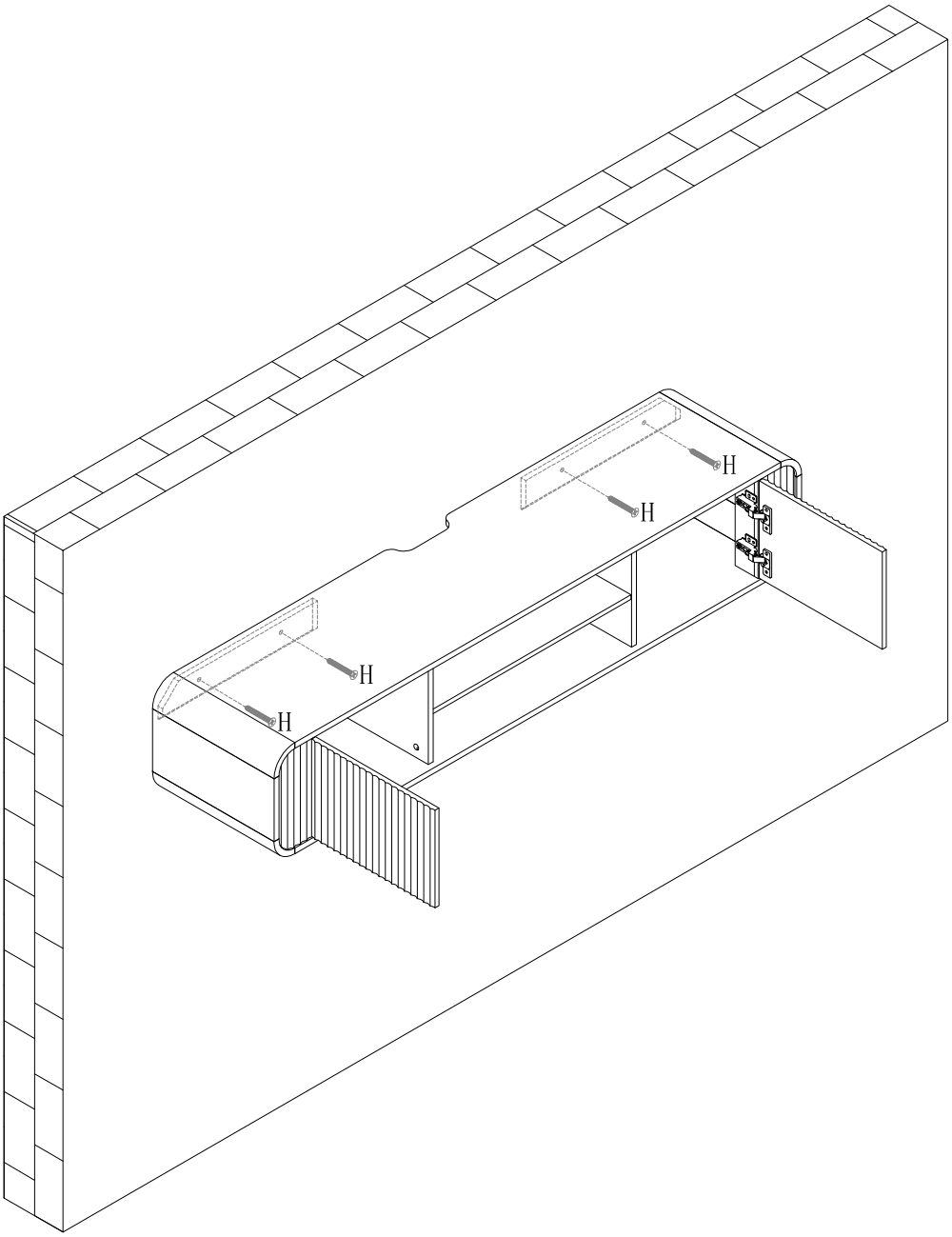

⚠	Finally, put the TV cabinet back, use screws to pass through the previously marked holes, and tighten them to reinforce.

	H×4PCS