ASSEMBLY INSTRUCTIONS
COASTER FINE FURNITURE



Fine Furniture for every stage of life

225140Q(B1-B3)
Queen Bed

REVISION 0 : 07/17/2026

COASTERFURNITURE.COM

ITEM: 225140Q(B1-B3)

ASSEMBLY INSTRUCTIONS

ASSEMBLY TIPS:

1. Remove hardware from box and sort by size.
2. Please check to see that all hardware and parts are present prior to start of assembly.
3. Please follow attached instructions in the same sequence as numbered to assure fast & easy assembly.

WARNING!

1. Don't attempt to repair or modify parts that are broken or defective. Please contact the store immediately.
2. This product is for home use only and not intended for commercial establishments.

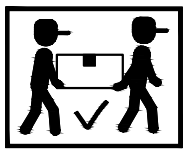

ASSEMBLY TIME | 25 MINUTES

PARTS IDENTIFICATION

B1(BOX 1)

A	HEADBOARD PANEL	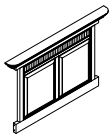	1PC	C	RIGHT HEADBOARD LEG		1PC
B	LEFT HEADBOARD LEG		1PC	D	HEADBOARD BOTTOM RAIL	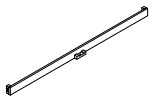	1PC

B2(BOX 2)

E	STORAGE FOOTBOARD	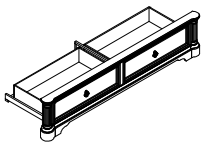	1PC	G	CENTER RAIL SUPPORT WITH LEVELER		3PCS
F	ROLL SLAT (13 PCS)	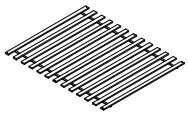	1SET	H	CONCEAL PANEL	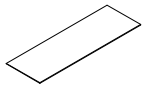	4PCS

B3(BOX 3)

I	BED RAIL		2PCS	J	CENTER RAIL		1PC
HB	225140Q(B1) FROM BOX 1 HEADBOARD COMPLETE	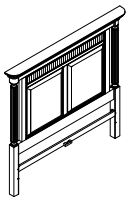	1PC	E	225140Q(B2) FROM BOX 2 FOOTBOARD	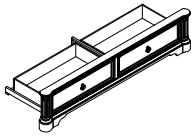	1PC

ITEM: 225140Q(B1-B3)

ASSEMBLY INSTRUCTIONS

COASTER FINE FURNITURE

ASSEMBLY TIPS:

1. Remove hardware from box and sort by size.
2. Please check to see that all hardware and parts are present prior to start of assembly.
3. Please follow attached instructions in the same sequence as numbered to assure fast & easy assembly.

WARNING!

1. Don't attempt to repair or modify parts that are broken or defective. Please contact the store immediately.
2. This product is for home use only and not intended for commercial establishments.

HARDWARE IDENTIFICATION

Z-B1 (BOX 1) - HARDWARE PACK IS LOCATED IN 225140Q(B1)

1	THREADED BOLT (5/16" x 75mm - RBW)	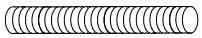	6PCS	6	BOLT (Ø5/16" x 38mm - RBW)	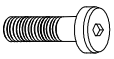	4PCS
2	U-SQUARE WASHER (25 x 15 x 2mm - RBW)		6PCS	7	LOCK WASHER (Ø5/16" - RBW)		4PCS
3	HEX NUT (5/16" x 17mm - RBW)		6PCS	8	FLAT WASHER (Ø5/16" x 19 x 1.5mm - RBW)	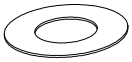	4PCS
4	WRENCH (88 x 25 x 2mm - RBW)	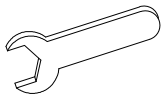	1PC	9	ALLEN WRENCH (74 x 30 x 4mm - RBW)		1PC
5	CONNECTING PLATE (80 x 50 x 2mm - BLK)	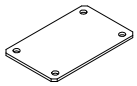	4PCS	10	FLAT HEAD SCREW (4 x 20mm - BLK)		16PCS

Z-B2 (BOX 2) - HARDWARE PACK IS LOCATED IN 225140Q(B2)

11	FLAT HEAD SCREW (4 x 32mm - RBW)		6PCS

Z-B3 (BOX 3) - HARDWARE PACK IS LOCATED IN 225140Q(B3)

12	THREADED BOLT (5/16" x 75mm - RBW)		8PCS	16	BOLT (Ø1/4" x 32mm - RBW)	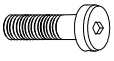	2PCS
13	U-SQUARE WASHER (25 x 15 x 2mm - RBW)		8PCS	17	LOCK WASHER (Ø1/4" - RBW)		2PCS
14	HEX NUT (5/16" x 17mm - RBW)		8PCS	18	FLAT WASHER (Ø1/4" x 19 x 1.5mm - RBW)	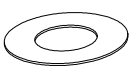	2PCS
15	WRENCH (88 x 25 x 2mm - RBW)	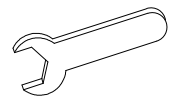	1PC	19	ALLEN WRENCH (74 x 30 x 4mm - RBW)	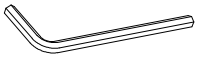	1PC

NOTE:

Phillips head screw driver is required in the assembly process; however, manufacturer does not provide this item.

ITEM: **225140Q(B1-B3)**

ASSEMBLY INSTRUCTIONS

COASTER FINE FURNITURE

STEP 1

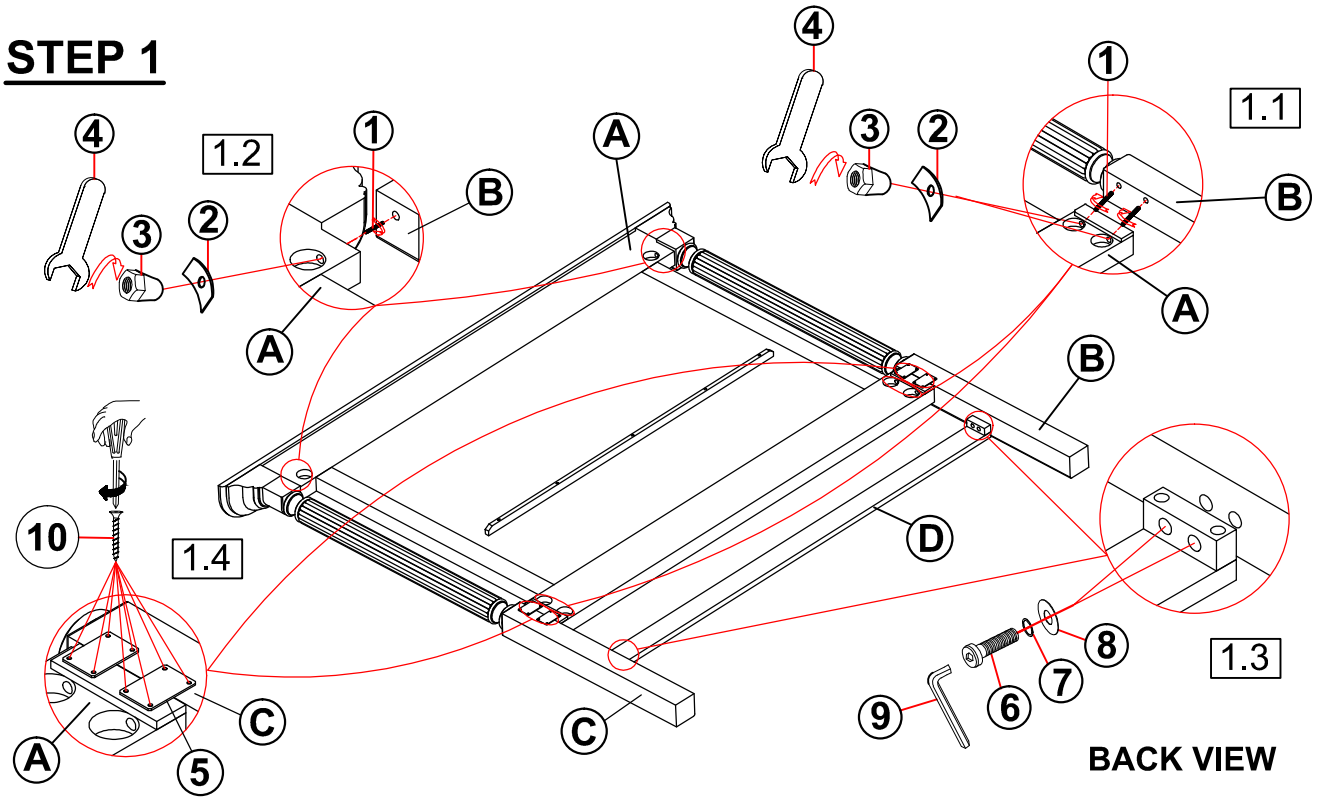

STEP 2

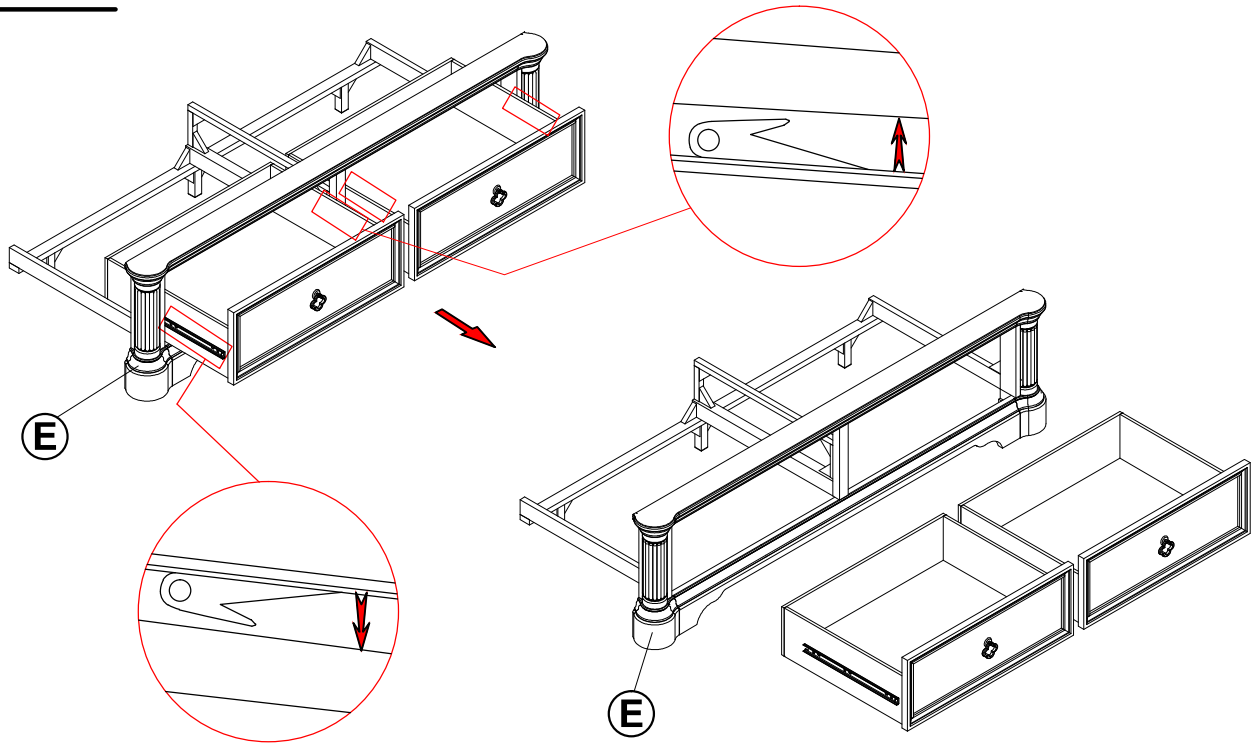

ITEM: **225140Q(B1-B3)**

ASSEMBLY INSTRUCTIONS

COASTER FINE FURNITURE

STEP 3

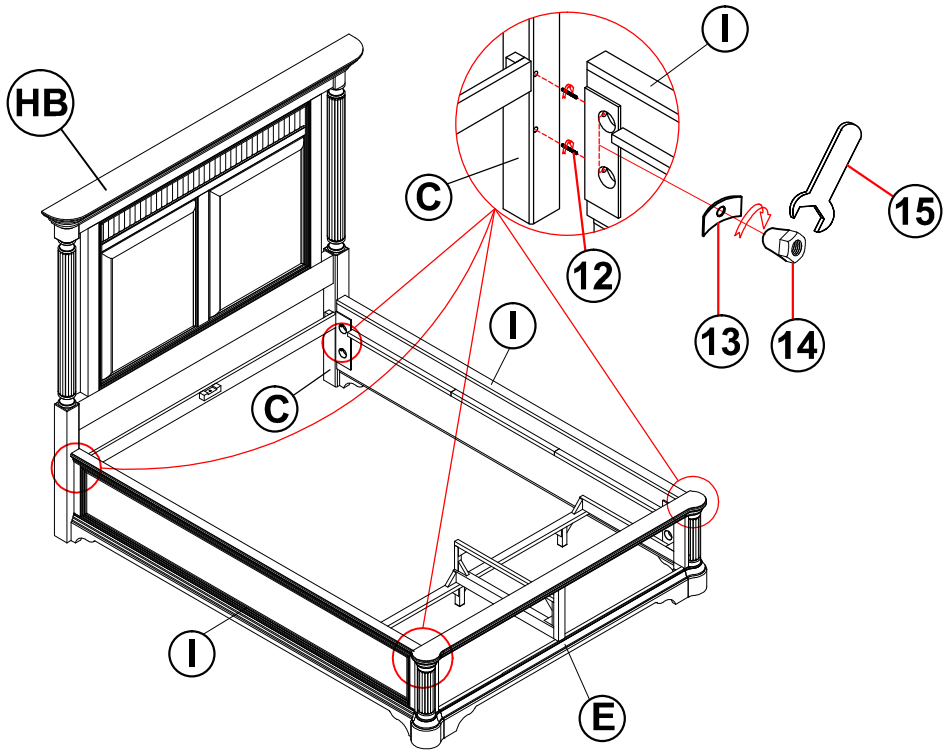

STEP 4

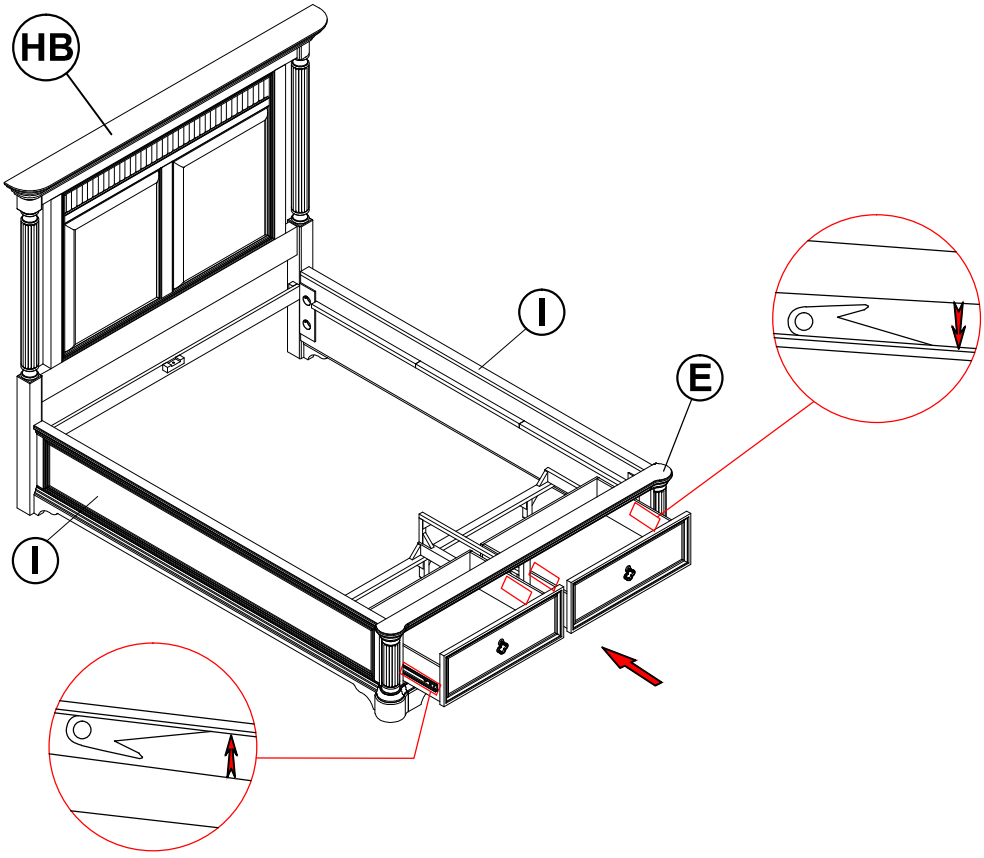

ITEM: **225140Q(B1-B3)**

ASSEMBLY INSTRUCTIONS

STEP 5

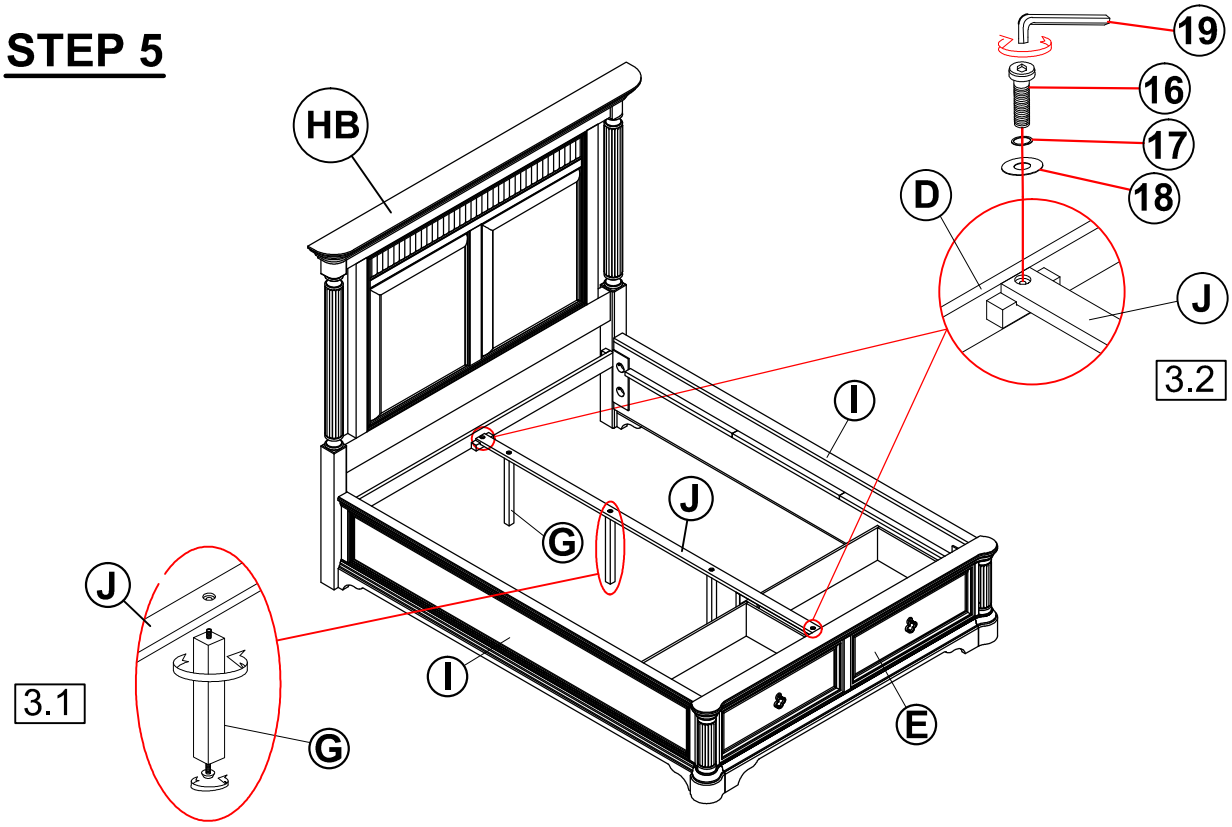

STEP 6

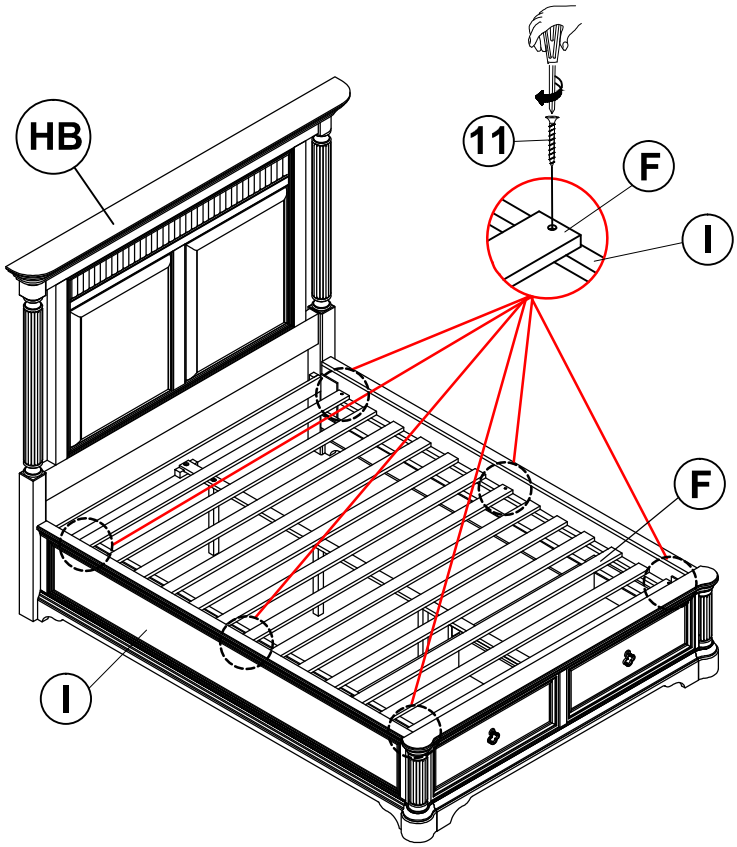

ITEM: **225140Q(B1-B3)**

ASSEMBLY INSTRUCTIONS

STEP 7

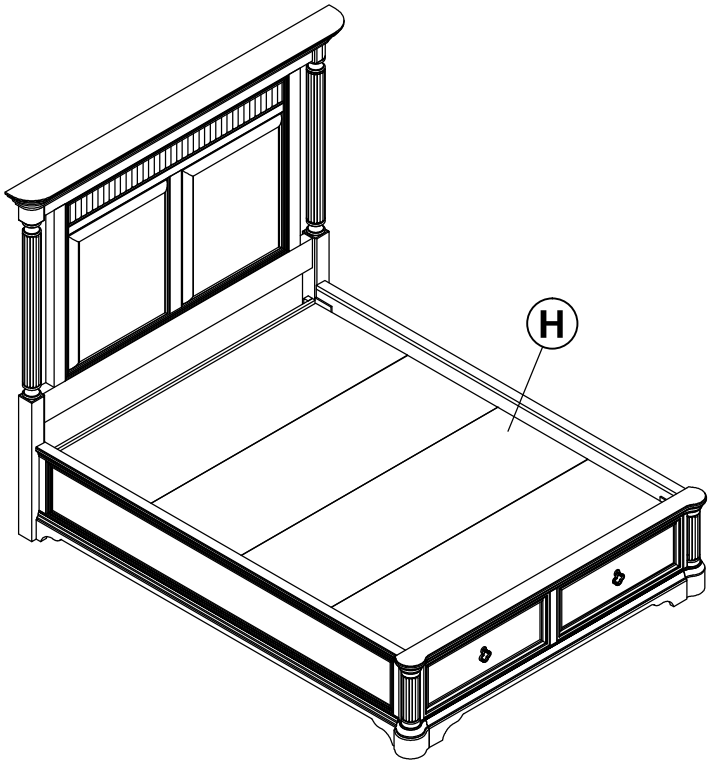

STEP 8

COMPLETE

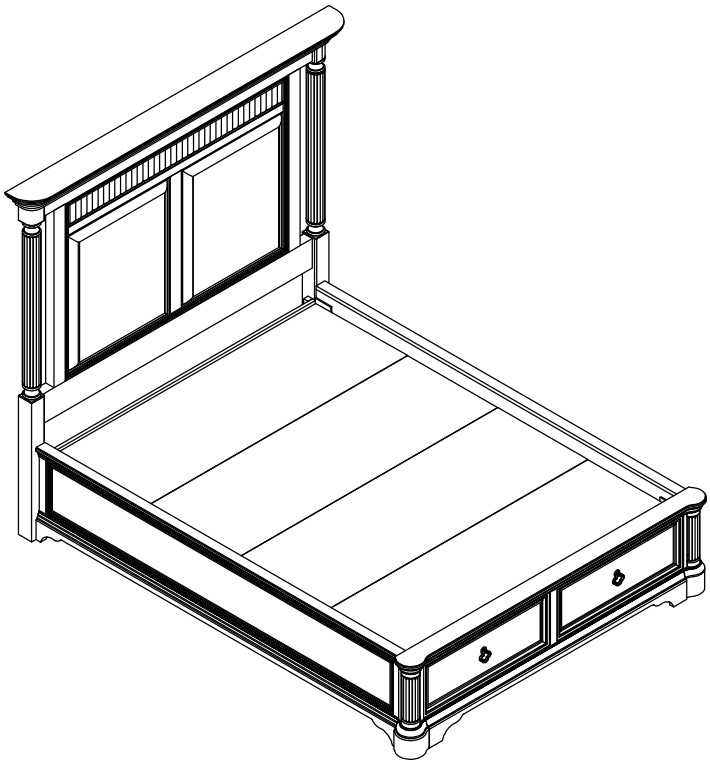

ITEM: 225140Q(B1-B3)

Inner Size: 61.00"W x 81.75"D
Inner Size of Drawer: 26.25"W x 20.00"D x 6.25"H x 0.50"T

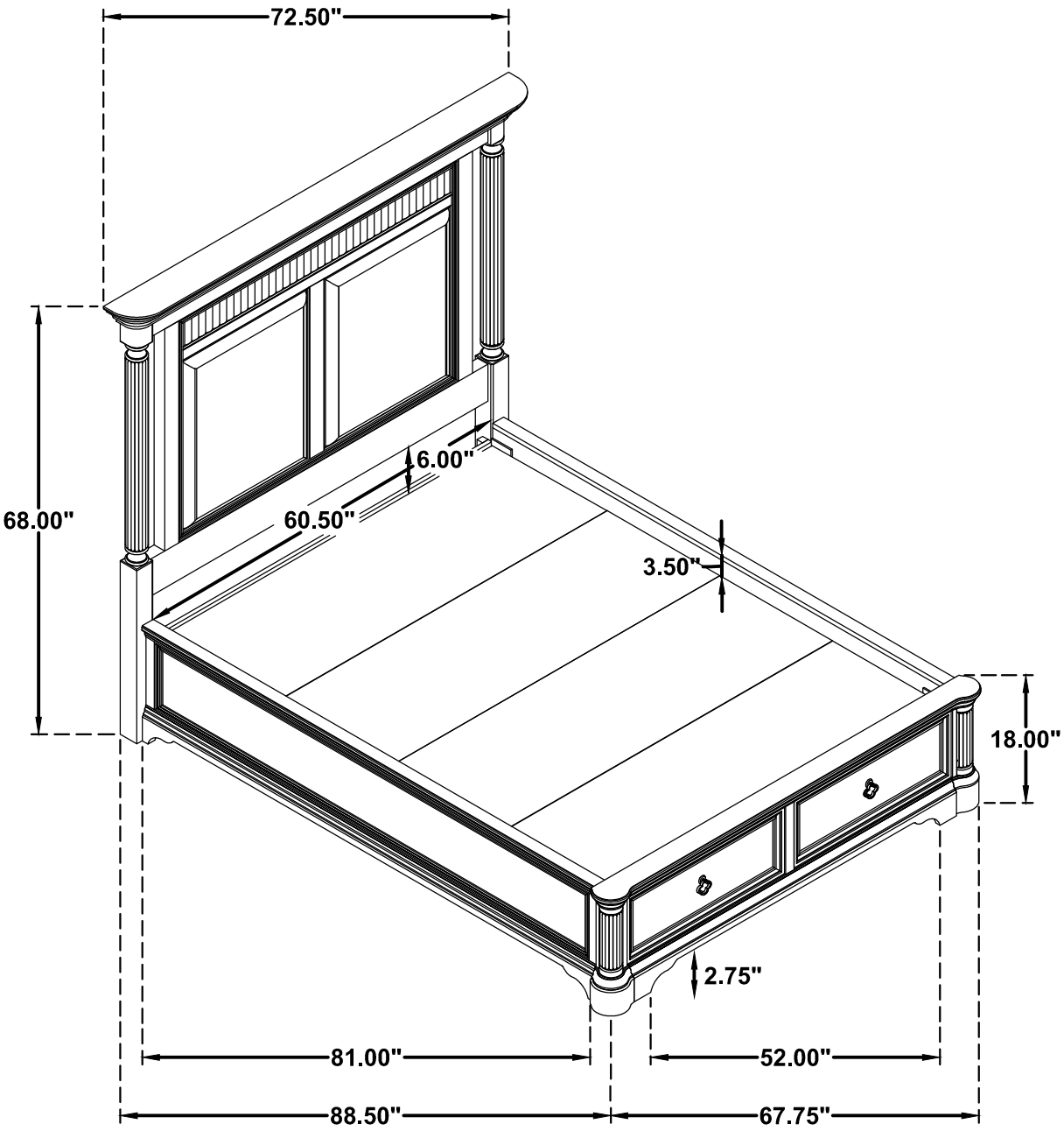

Note : Dimension tolerance ±5%

ASSEMBLY INSTRUCTIONS
COASTER FINE FURNITURE



Fine Furniture for every stage of life

225142
Nightstand

REVISION 0 : 07/17/2026

COASTERFURNITURE.COM

ITEM: **225142**

ANTI-TIPPING INSTALLATION INSTRUCTIONS
FURNITURE TIPPING RESTRAINT

WARNING

Injury may result from tipping furniture.

This restraint may protect against tipping furniture.

Do not allow children to climb on furniture.

This restraint is not a substitute for proper adult supervision.

Failure to detach this restraint before moving the furniture may result in injury and damage.

1. Attach one of the mounting brackets securely to the back edge of the unit, using the short screw.
2. Determine where the unit is to be placed, and mark the location on the wall for the other mounting bracket. The bracket on the wall needs to be approximately 2" below the bracket mounted to the edge of the unit.
3. Drill a hole in the wall. Insert the plastic wall anchor into the hole and if necessary, use a small block of wood and hammer to tap it in so that it's flush with the wall.
4. Attach the bracket over the plastic wall anchor using the long screw.
5. Place the unit against the wall, both brackets need to be facing each other.
6. Lace an end of the restraint strap through the hole in each bracket. Bring both ends together and rotate the thumb nut onto the threaded end until tight.
7. Ensure that the restraint strap is securely laced and locked.

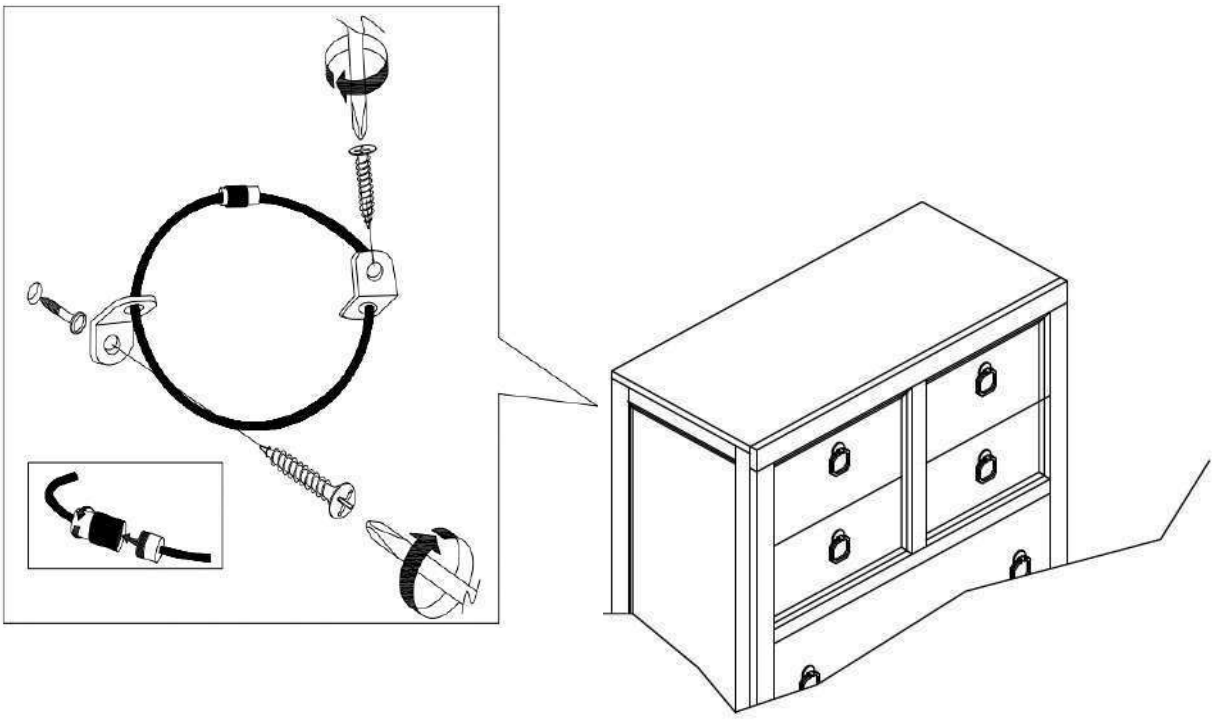



ITEM: **225142**

Inner Size Of Drawer A: 19.00"W x 11.25"D x 2.25"H x 0.50"T
Inner Size Of Drawer B: 19.00"W x 11.25"D x 4.00"H x 0.50"T

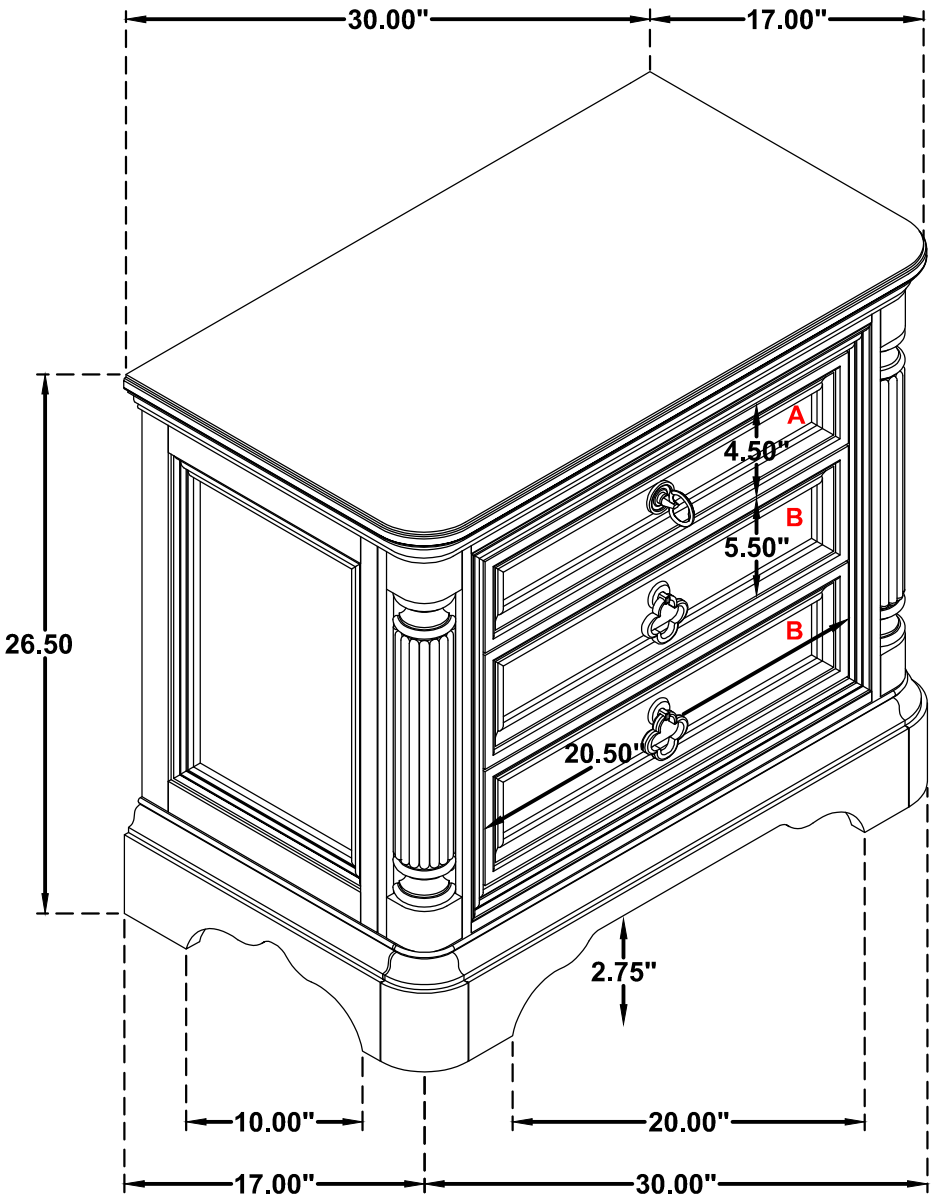

Note: Dimension tolerance ±5%

ASSEMBLY INSTRUCTIONS
COASTER FINE FURNITURE



Fine Furniture for every stage of life

225143
Dresser

REVISION 0 : 07/17/2026

COASTERFURNITURE.COM

ITEM:225143
ASSEMBLY INSTRUCTIONS

ASSEMBLY TIPS:

1. Remove hardware from box and sort by size.
2. Please check to see that all hardware and parts are present prior to start of assembly.
3. Please follow attached instructions in the same sequence as numbered to assure fast & easy assembly.

WARNING!

1. Don't attempt to repair or modify parts that are broken or defective. Please contact the store immediately.
2. This product is for home use only and not intended for commercial establishments.



ASSEMBLY TIME	5 MINUTES

PARTS IDENTIFICATION

A	DRESSER	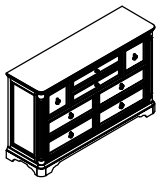	1PC

ITEM:225143
ASSEMBLY INSTRUCTIONS

STEP 1

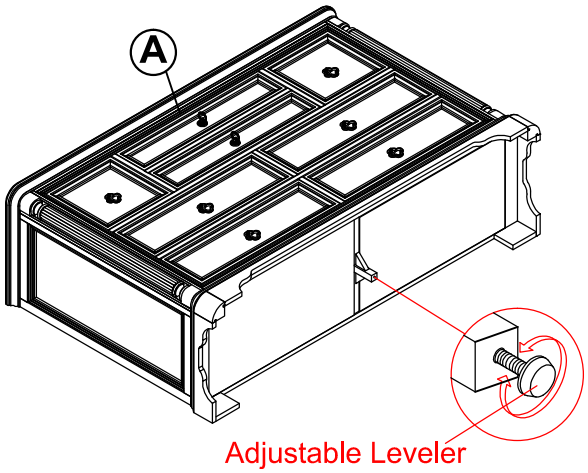

STEP 2
COMPLETE

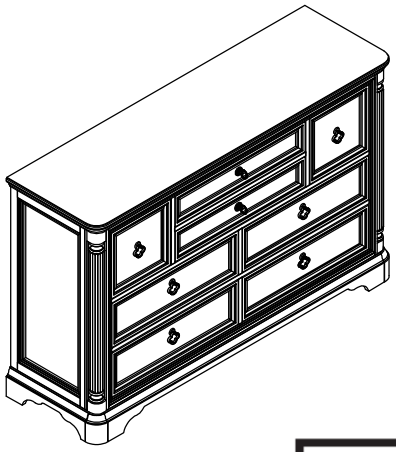



ITEM: **225143**

ANTI-TIPPING INSTALLATION INSTRUCTIONS
FURNITURE TIPPING RESTRAINT

WARNING

Injury may result from tipping furniture.

This restraint may protect against tipping furniture.

Do not allow children to climb on furniture.

This restraint is not a substitute for proper adult supervision.

Failure to detach this restraint before moving the furniture may result in injury and damage.

1. Attach one of the mounting brackets securely to the back edge of the unit, using the short screw.
2. Determine where the unit is to be placed, and mark the location on the wall for the other mounting bracket. The bracket on the wall needs to be approximately 2" below the bracket mounted to the edge of the unit.
3. Drill a hole in the wall. Insert the plastic wall anchor into the hole and if necessary, use a small block of wood and hammer to tap it in so that it's flush with the wall.
4. Attach the bracket over the plastic wall anchor using the long screw.
5. Place the unit against the wall, both brackets need to be facing each other.
6. Lace an end of the restraint strap through the hole in each bracket. Bring both ends together and rotate the thumb nut onto the threaded end until tight.
7. Ensure that the restraint strap is securely laced and locked.

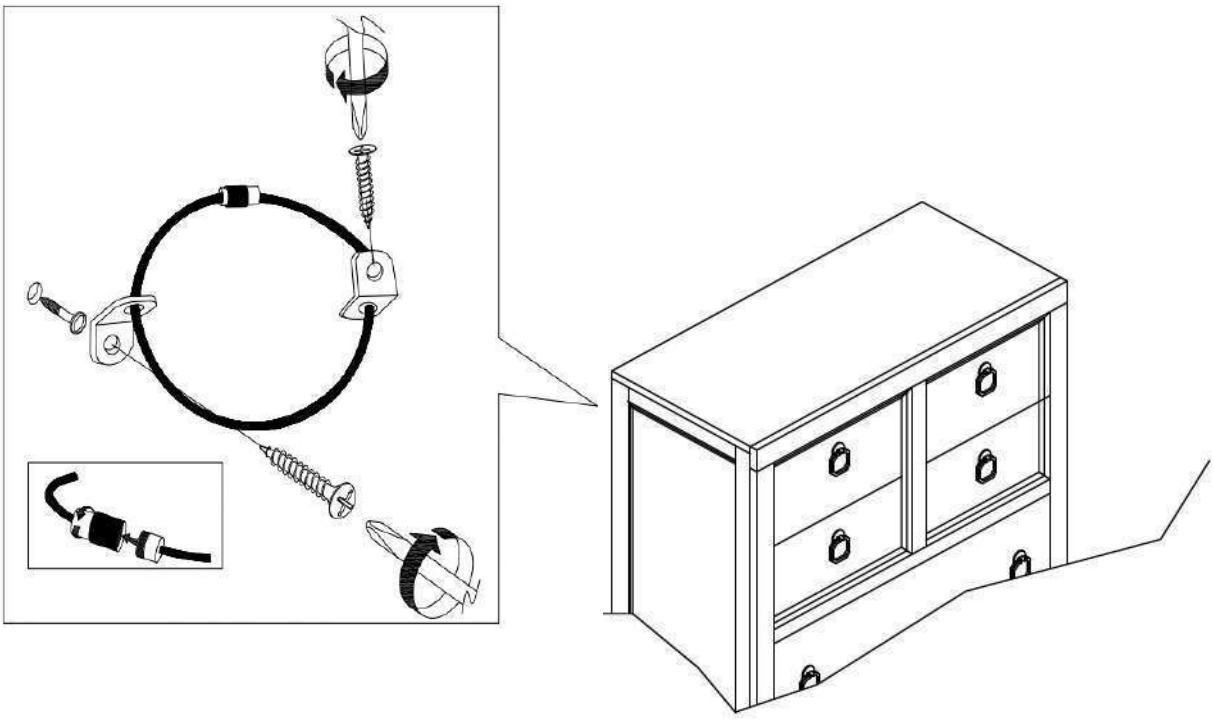



ITEM: **225143**

Inner Size of Drawer A: 11.50"W X 12.75"D X 11.50"H X 0.50"T
Inner Size of Drawer B: 27.25"W X 12.75"D X 4.50"H X 0.50"T
Inner Size of Drawer C: 26.25"W X 12.75"D X 7.25"H X 0.50"T

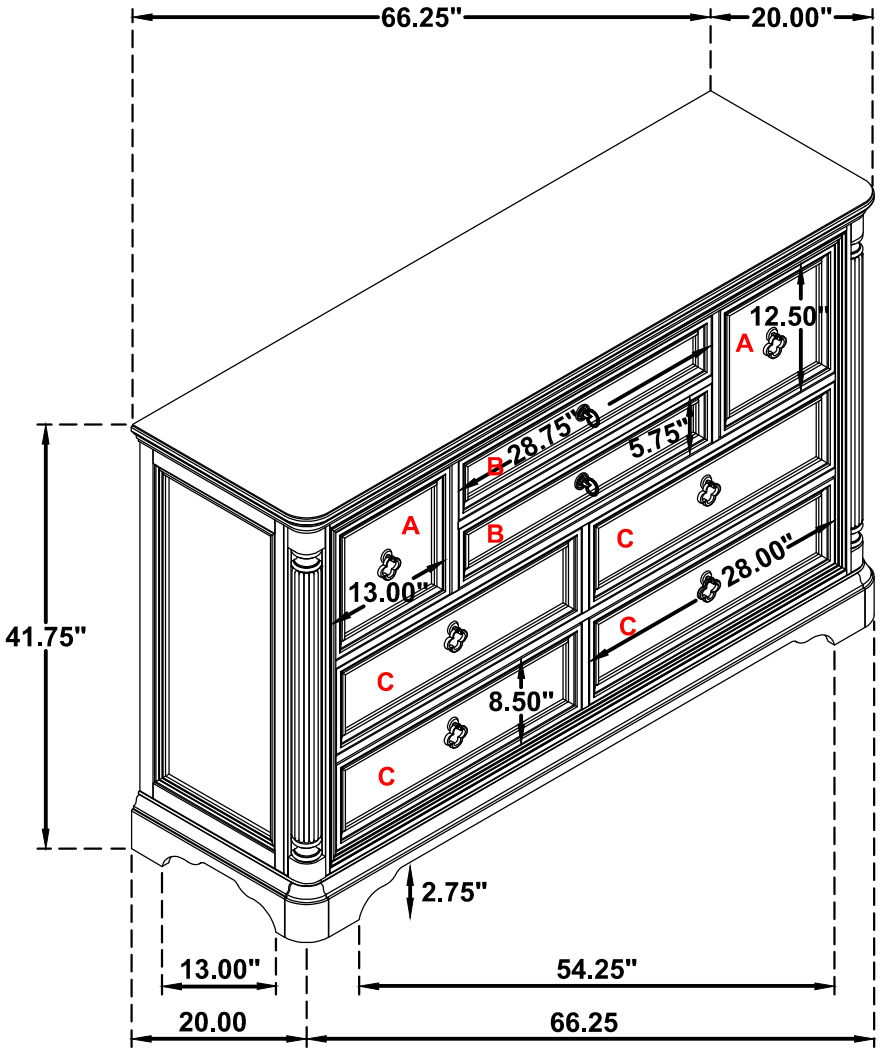

Note: Dimension tolerance ±5%

ASSEMBLY INSTRUCTIONS
COASTER FINE FURNITURE

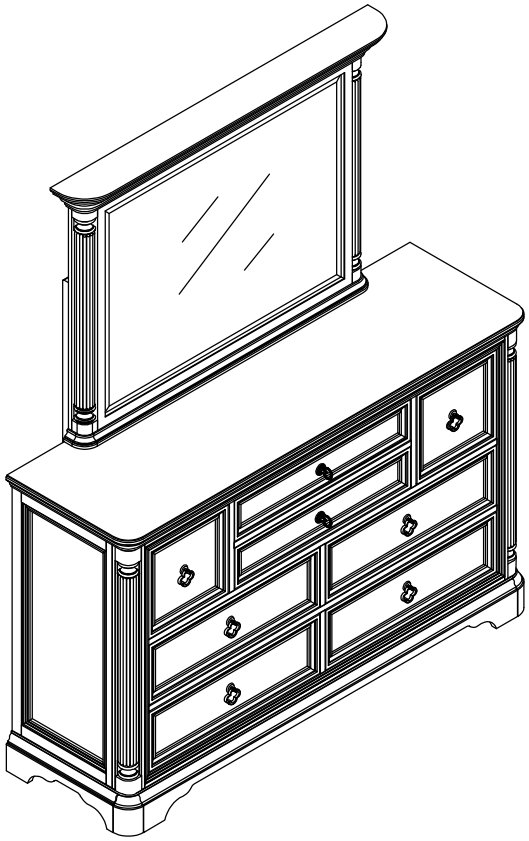

Fine Furniture for every stage of life

225144
Mirror

REVISION 0 : 07/17/2026

COASTERFURNITURE.COM

ITEM:225144

ASSEMBLY INSTRUCTIONS

ASSEMBLY TIPS:

1. Remove hardware from box and sort by size.
2. Please check to see that all hardware and parts are present prior to start of assembly.
3. Please follow attached instructions in the same sequence as numbered to assure fast & easy assembly.

WARNING!

1. Don't attempt to repair or modify parts that are broken or defective. Please contact the store immediately.
2. This product is for home use only and not intended for commercial establishments.

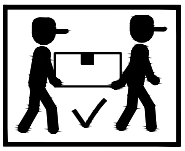

ASSEMBLY TIME | 10 MINUTES

PARTS IDENTIFICATION

A	FROM BOX ITEM# 225143 DRESSER	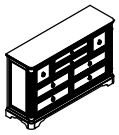	1PC
B	MIRROR		1PC
C	MIRROR SUPPORT (PACKED WITH DRESSER)	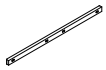	2PCS

HARDWARE IDENTIFICATION

1	BOLT (Ø1/4" x 32mm - RBW)	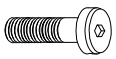	6PCS
2	LOCK WASHER (Ø1/4" - RBW)		6PCS
3	FLAT WASHER (Ø1/4" x 19 x 1.5mm - RBW)		6PCS
4	ALLEN WRENCH (74 x 30 x 4mm - RBW)	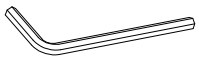	1PC

ITEM:**225144**

ASSEMBLY INSTRUCTIONS

STEP 1

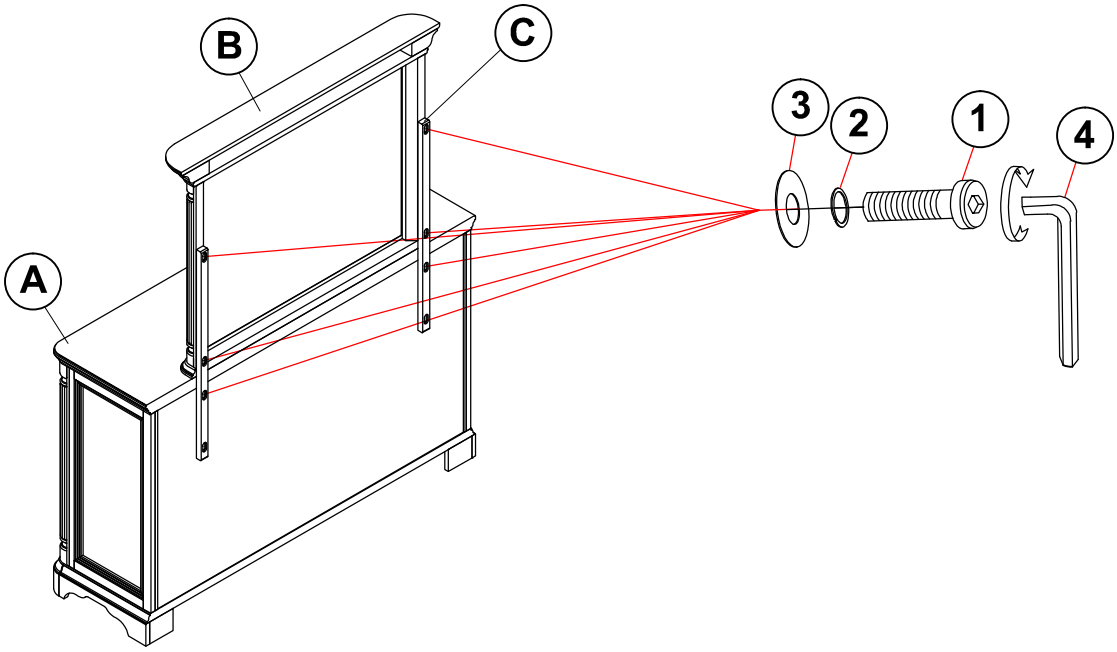

BACK VIEW

STEP 2

COMPLETE

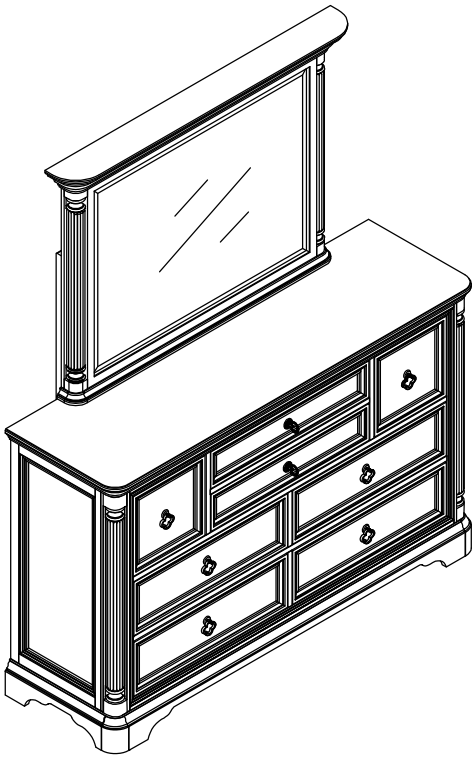

ITEM:**225144**

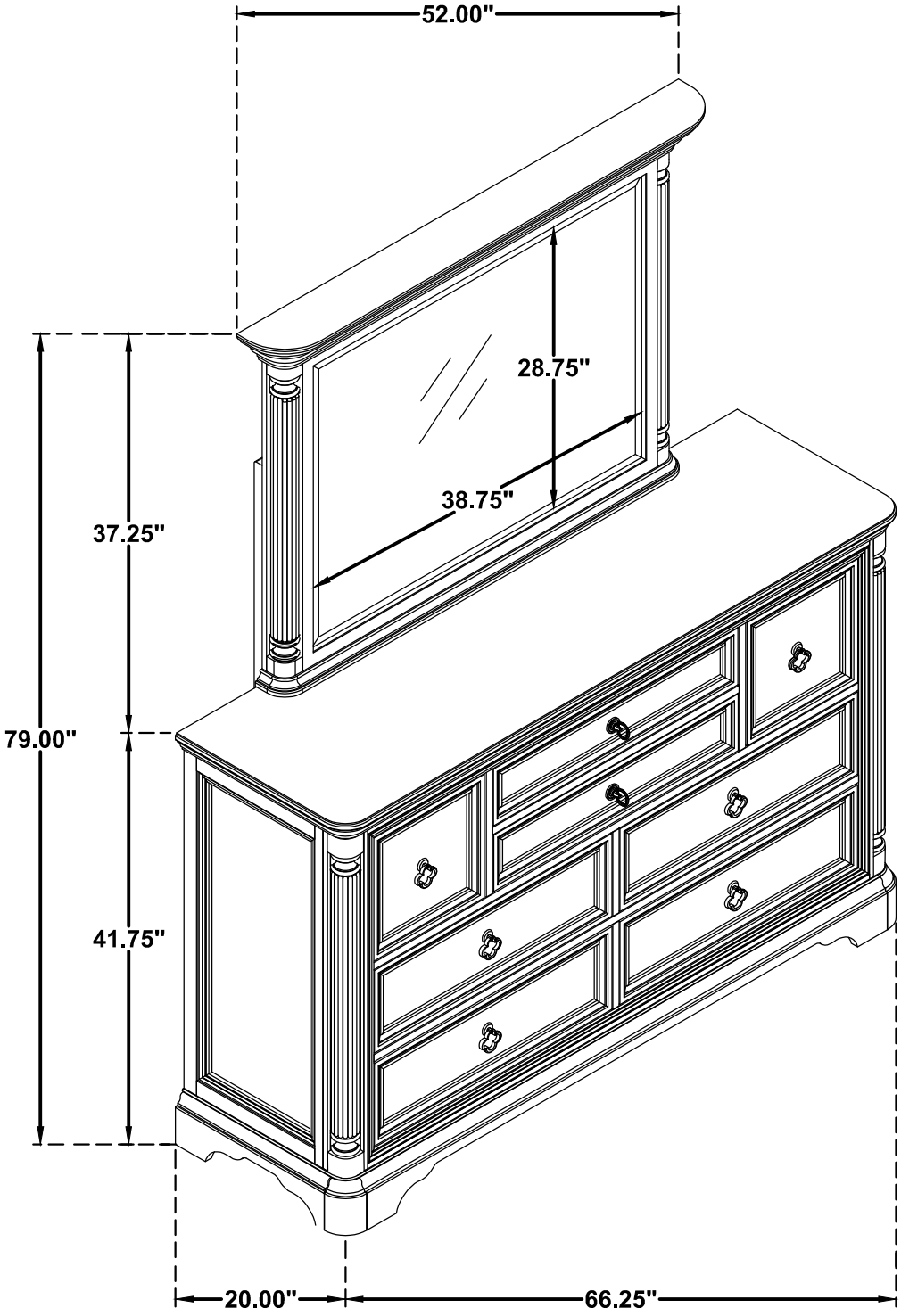

Note: Dimension tolerance ±5%

ASSEMBLY INSTRUCTIONS
COASTER FINE FURNITURE



Fine Furniture for every stage of life

225145
Chest

REVISION 0 : 07/17/2026

COASTERFURNITURE.COM

ITEM: **225145**

ANTI-TIPPING INSTALLATION INSTRUCTIONS
FURNITURE TIPPING RESTRAINT

WARNING

Injury may result from tipping furniture.
This restraint may protect against tipping furniture.
Do not allow children to climb on furniture.
This restraint is not a substitute for proper adult supervision.
Failure to detach this restraint before moving the furniture may result in injury and damage.

1. Attach one of the mounting brackets securely to the back edge of the unit, using the short screw.
2. Determine where the unit is to be placed, and mark the location on the wall for the other mounting bracket. The bracket on the wall needs to be approximately 2" below the bracket mounted to the edge of the unit.
3. Drill a hole in the wall. Insert the plastic wall anchor into the hole and if necessary, use a small block of wood and hammer to tap it in so that it's flush with the wall.
4. Attach the bracket over the plastic wall anchor using the long screw.
5. Place the unit against the wall, both brackets need to be facing each other.
6. Lace an end of the restraint strap through the hole in each bracket. Bring both ends together and rotate the thumb nut onto the threaded end until tight.
7. Ensure that the restraint strap is securely laced and locked.

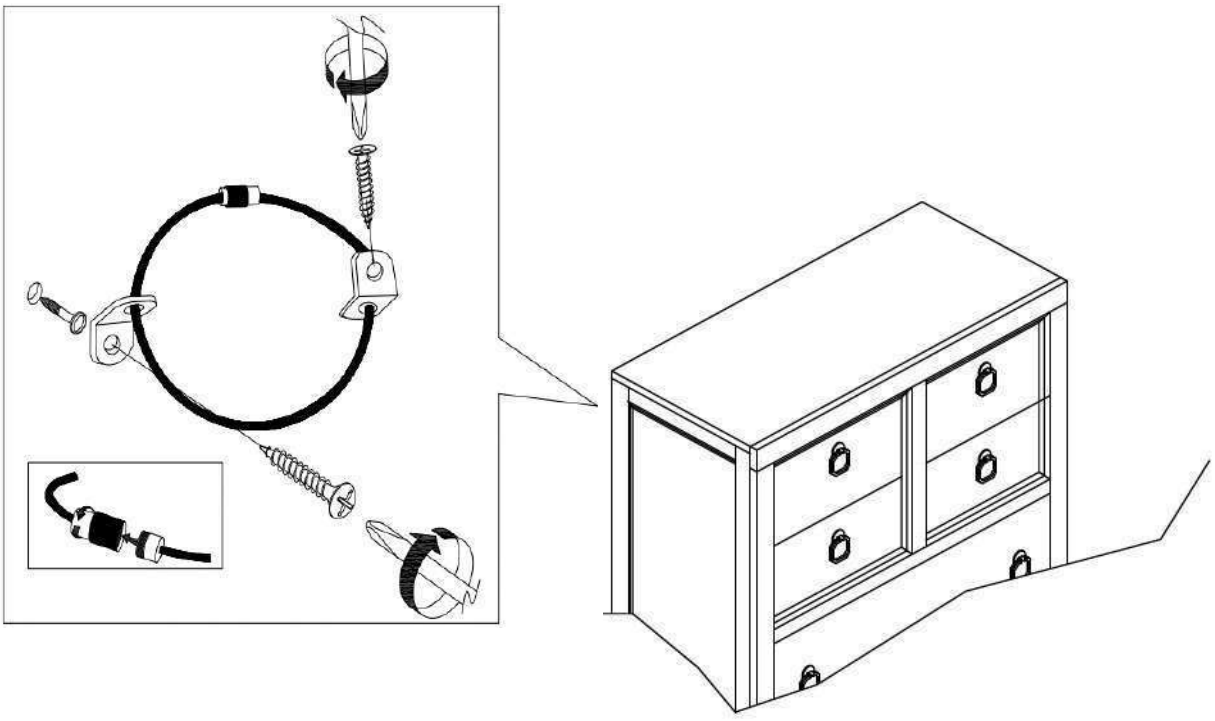

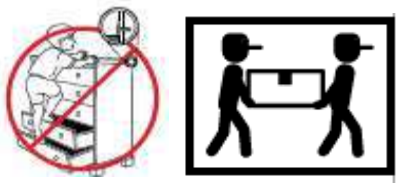

ITEM: **225145**

Inner Size of Drawer A : 29.00"W X 12.75"D X 6.00"H X 0.50"T
Inner Size of Drawer B : 29.00"W X 12.75"D X 7.25"H X 0.50"T

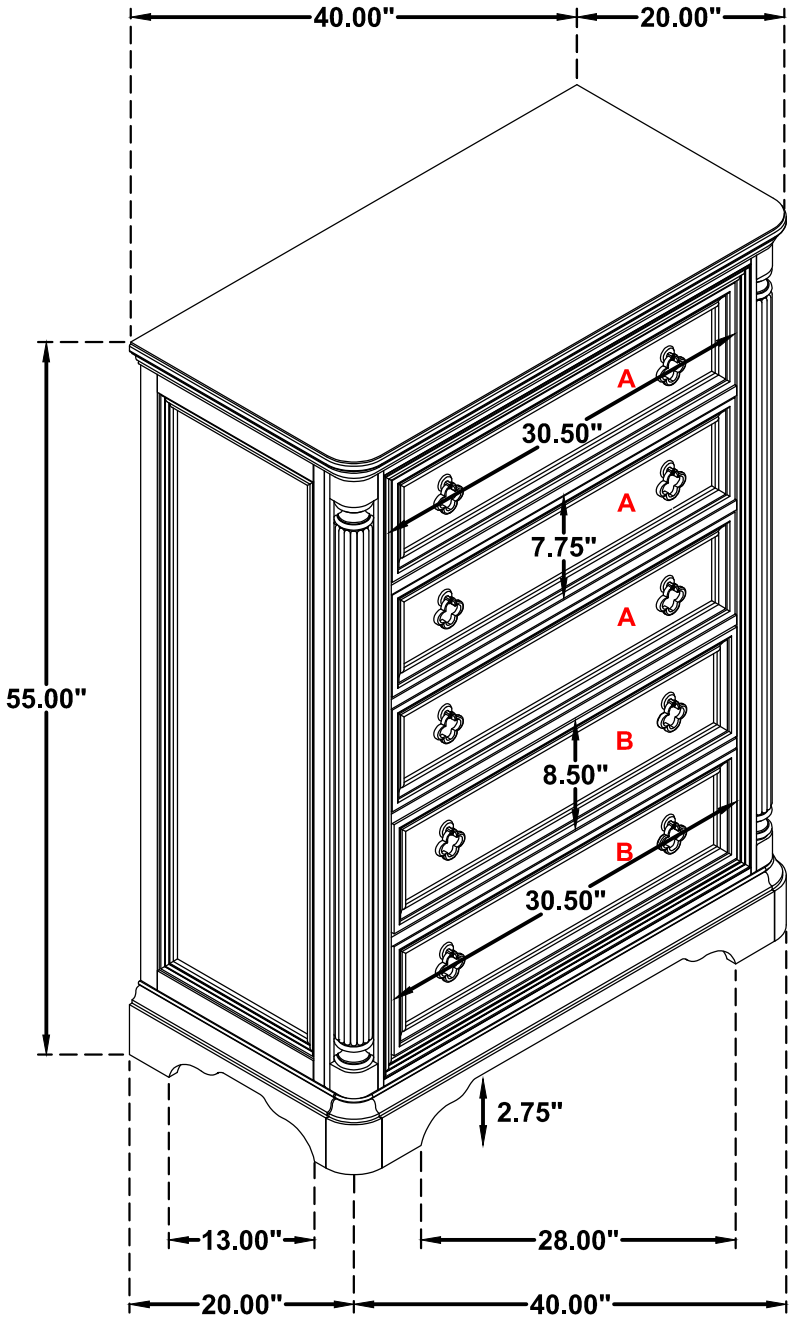

Note: Dimension tolerance ±5%