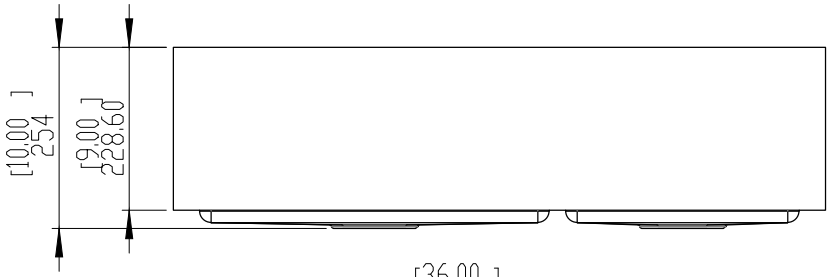
[10.00]
254
[9.00]
228.60

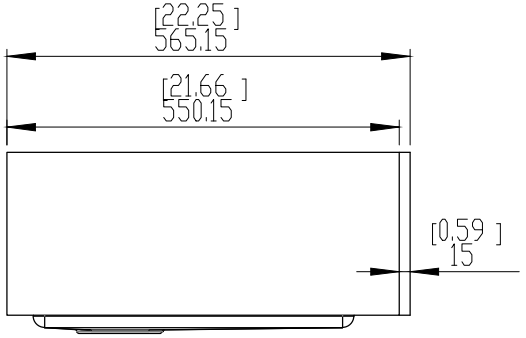
[22.25]
565.15
[21.66]
550.15
[0.59]
15

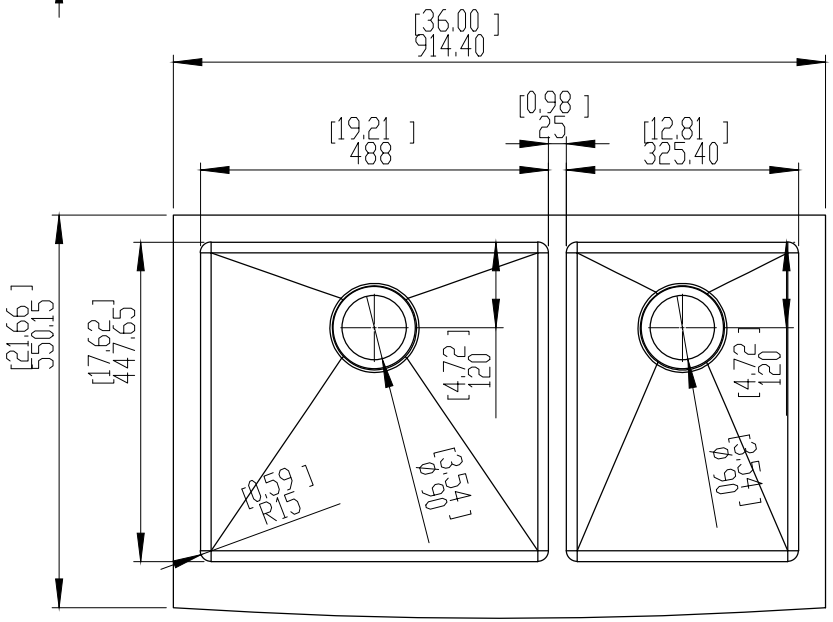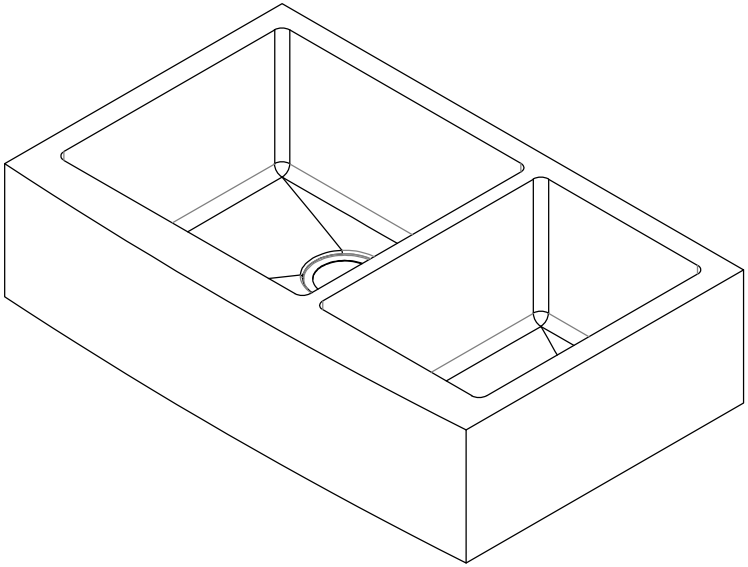
[36.00]
914.40
[0.98]
25
[19.21]
488
[12.81]
325.40
[21.66]
550.15
[17.62]
447.65
[4.72]
120
[4.72]
120
[0.59]
R15
[13.90]
Φ354
[13.90]
Φ354