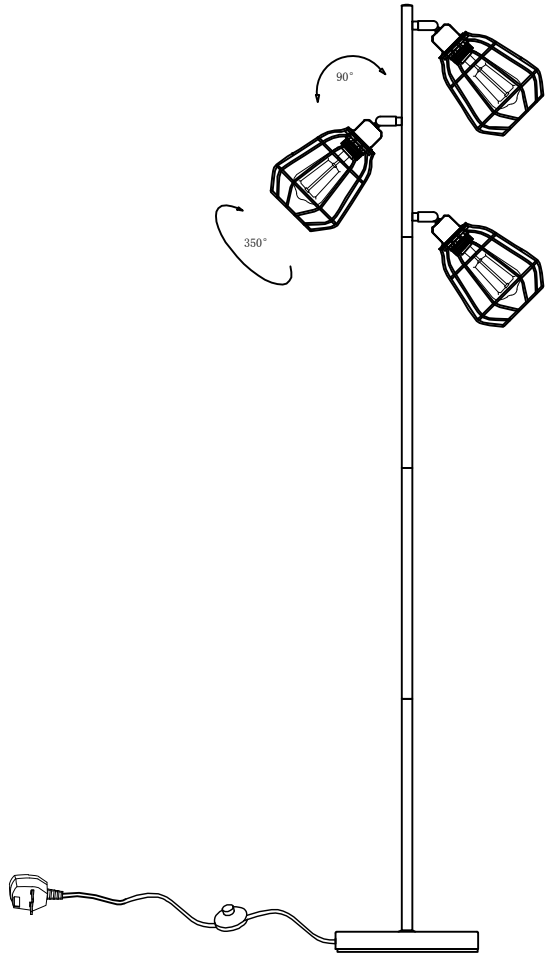
90°
350°

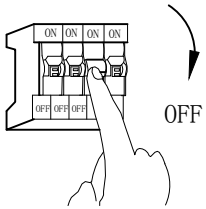
ON ON ON ON
OFF OFF OFF
OFF

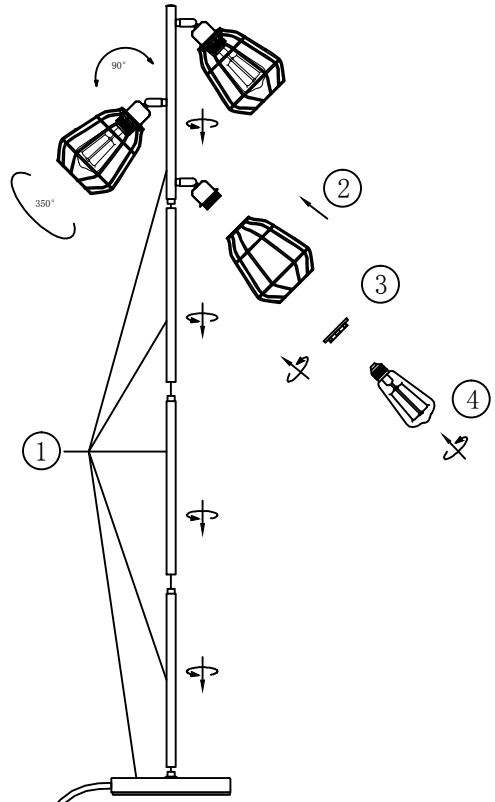
90°
350°
1
2
3
4

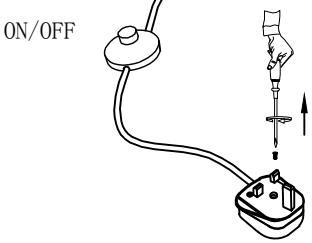
ON/OFF

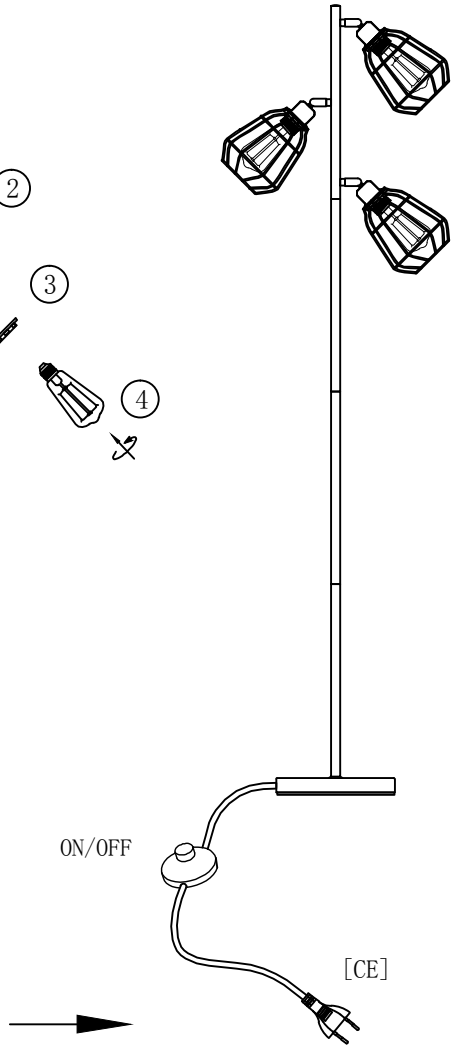
ON/OFF
[CE]

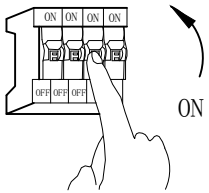
ON ON ON ON
OFF OFF OFF
ON