Installation manual

STORAGE BED FRAME

TWIN SIZE

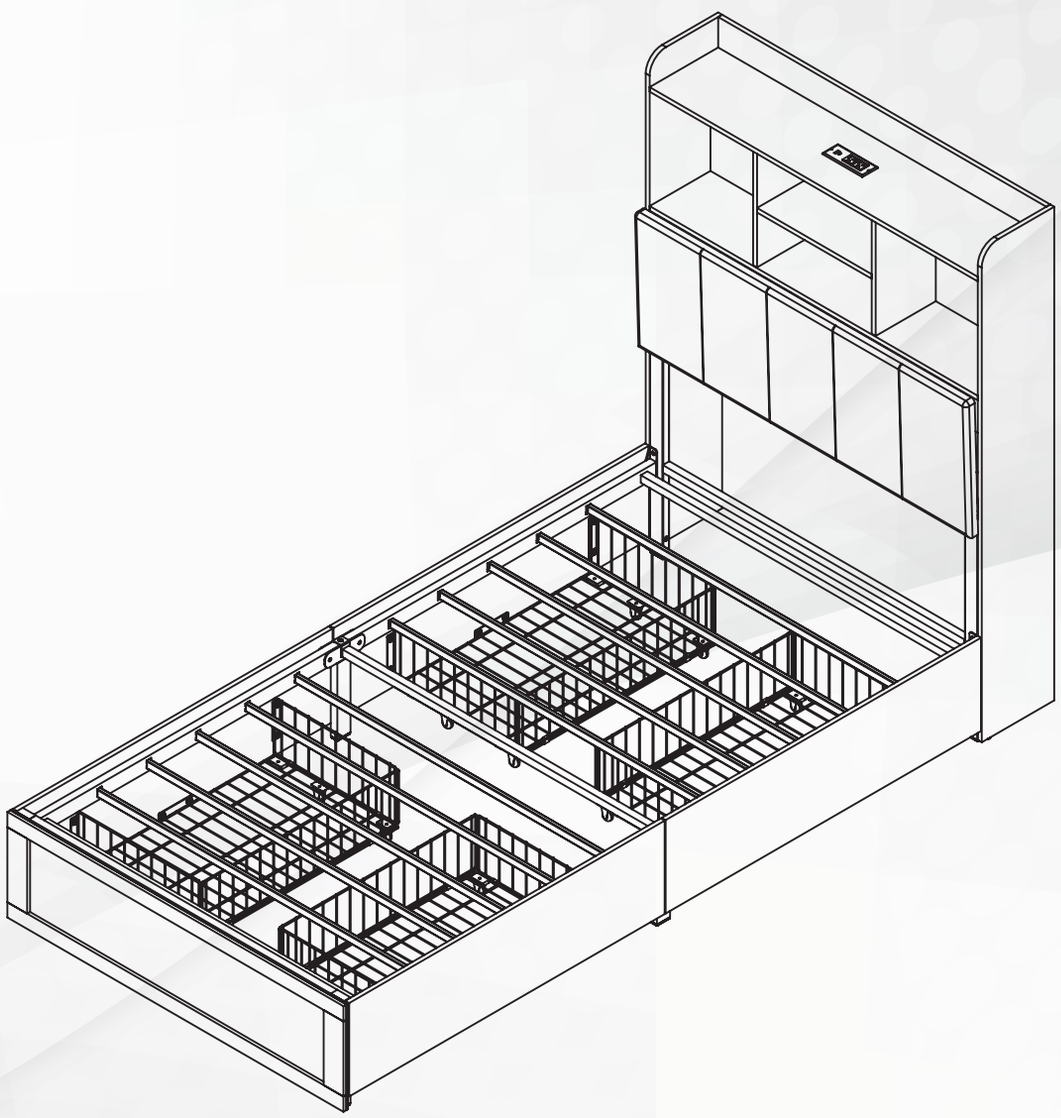

Carefully reading this manual will help you complete the product installation more efficiently.

BEFORE YOU BEGIN

- Please read this guide carefully to familiarize yourself with the required tools, materials, and procedures. Follow the applicable sections to ensure proper assembly.
- This guide is based on the latest product information at the time of printing. The company reserves the right to make changes to product features, packaging, or availability without notice. Before assembling the furniture, ensure all necessary preparations are completed.
- This manual includes important installation, cleaning, and maintenance information. Please read and keep it for future reference.
- This furniture is made from **E1-grade board material,** with harmful gas emissions of less than 1.5mg/L, compliant with **GB/T 15102-20170** standards.
- Before assembly, check if the product is damaged. Place it on a flat surface for balance.
- Avoid prolonged exposure to moisture and sunlight. Clean the furniture regularly with a **damp cloth only** to prevent bacterial growth.
- Do not expose the furniture to acidic, alkaline, or corrosive liquids. Handle with care during installation to avoid scratches or damage.

SAFETY WARNINGS

- Please follow the warning information displayed on this product and its packaging. Do not remove the warning labels.
- Always use recommended mattress sizes or supports to prevent entrapment or falling.
- Regularly inspect the product for proper assembly, damage, and tightness.
- Do not play or jump on the bed
- Avoid using replacement parts without manufacturer approval.
- Do not use waterbeds or floating mattresses.
- Avoid attaching any objects like hooks, straps, or ropes to the bed.
- Please keep this manual for future reference.
- Safety is a shared responsibility between us as the manufacturer and you as the guardian. Please read and consider the warnings on the page.

Safety Instructions / Warnings

Please read and follow all instructions carefully before installation and use.

- **WARNING: Risk of electric shock – Do not open or disassemble electrical parts.**
- Only use the product with a properly certified USB power supply (max. 5V ⎓ , 10W).
- Do not use with damaged power cords or plugs.
- Keep power cables away from moving or sharp parts of the furniture.
- Do not use extension cords or power strips unless specifically approved for the load.
- This product is **not a toy**. Do not allow children to play with electrical components or moving parts.
- Children under 8 years old must be kept away from the furniture unless continuously supervised.
- Keep remote controls, control switches, and ports **out of children's reach**.
- Always **disconnect the product from power** before cleaning, maintenance, or relocation.
- Do not attempt to open, modify, or repair electrical components.
- **Repairs must be performed by qualified professionals only.**
- Do not insert any foreign objects into openings or mechanisms.
- Clean with a dry cloth or a slightly damp soft cloth. Do not use solvents.
- This product is intended for **indoor use only** in dry environments.
- Do not expose the furniture to moisture, liquids, or direct sunlight.
- Ensure stability and clearance around any moving parts (e.g., lift mechanisms, recliners).
- Do not overload power outlets or USB ports beyond the specified ratings.

FCC Information

CAUTION: Changes or modifications not expressly approved by the party responsible for compliance could void the user's authority to operate the equipment!

This device complies with Part 15 of the FCC Rules. Operation is subject to the following two conditions:
1. This product may cause harmful interference.
2. This product must accept any interference received, including interference that may cause undesired operation.

WARNING: Changes or modifications to this product not expressly approved by the party.responsible for compliance could void the user's authority to operate the product.

Note: This product has been tested and found to comply with the limits for a Class B digital device pursuant to Part 15 of the FCC Rules, These limits are designed to provide reasonable protection against harmful interference in a residential installation.

This product generates, uses and can radiate radio frequency energy, and if not installed and used in accordance with the instructions, may cause harmful interference to radio communications. However, there is no guarantee that interference will not occur in a particular installation. If this product does cause harmful interference to radio or television reception,which can be determined by turning the product off and on, the user is encouraged to try to correct the interference by one or more of the following measures.
· Reorient or relocate the receiving antenna.
· Increase the distance between the product and receiver.
· Connect the product to an outlet on a circuit different from that to which the receiver is connected.
· Consult the dealer or an experienced radio/TV technician for assistance.

PARTS LIST

1 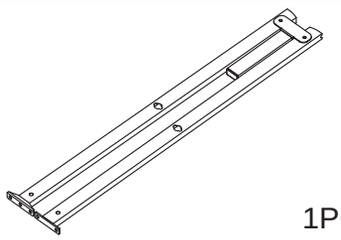 1PC	2 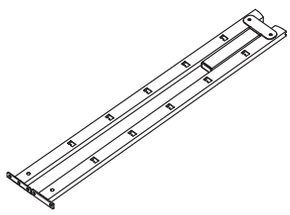 1PC	3 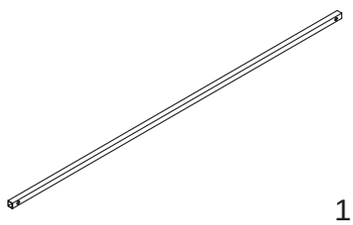 1PC
4 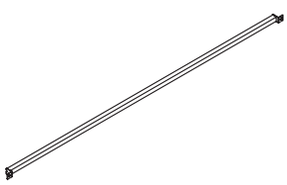 1PC	5 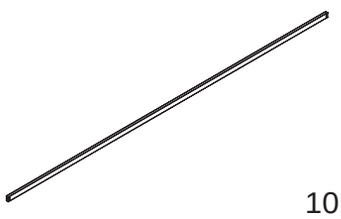 10PCS	6 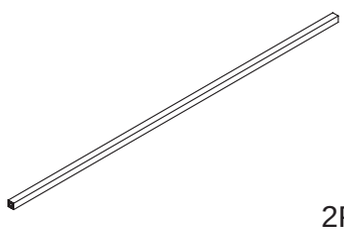 2PCS
8 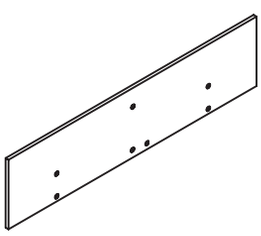 4PCS	9 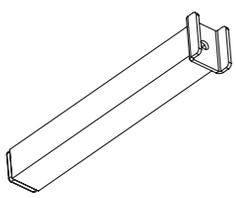 2PCS	10 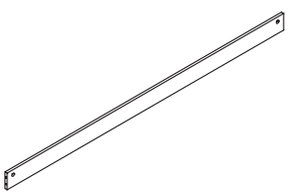 1PC
11 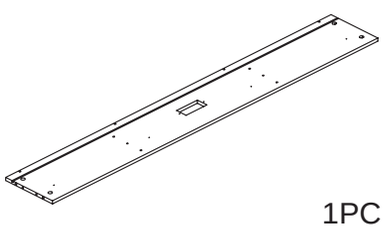 1PC	12 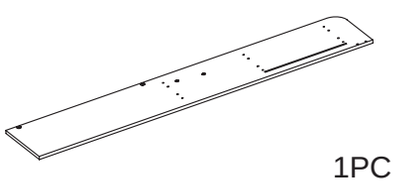 1PC	13 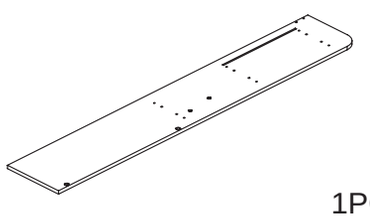 1PC
14 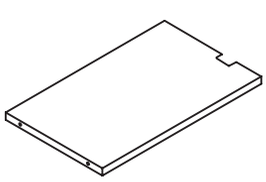 1PC	15 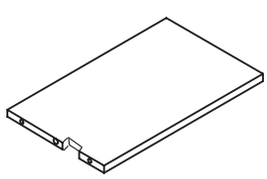 1PC	16 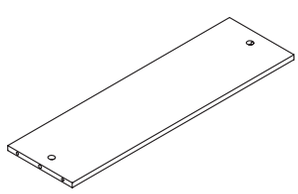 1PC
17 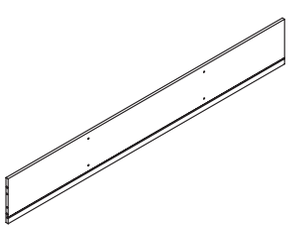 1PC	18 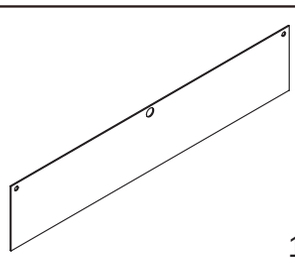 1PC	20 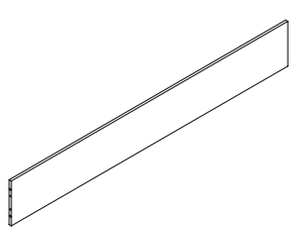 1PC
21 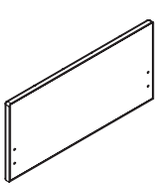 1PC	22 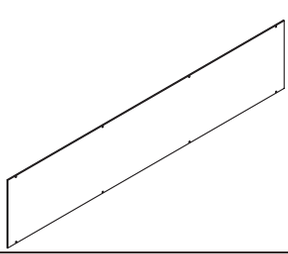 1PC	23 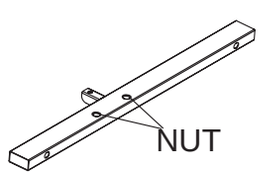 NUT 1PC

PARTS LIST

24 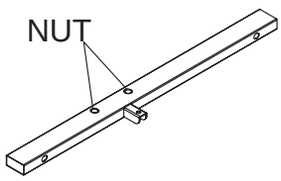 1PC	25 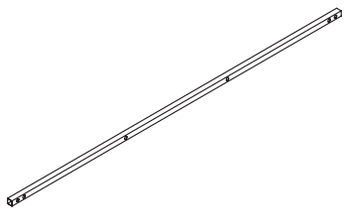 1PC	26 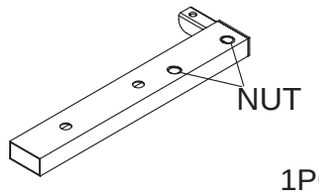 1PC
27 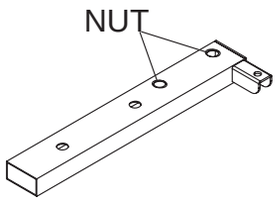 1PC	28 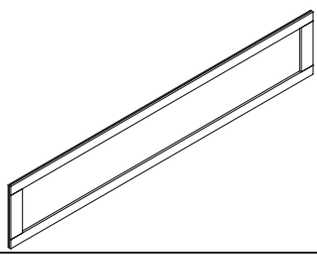 1PC	T3 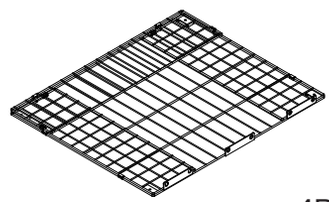 4PCS
V  16PCS	J1 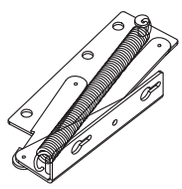 2PCS	J2 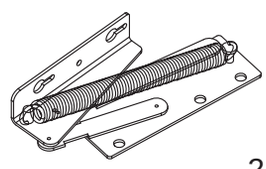 2PCS

PARTS LIST

A  ST3.2x12 ∅1/8x15/32” 16PCS	**B**  ST4.2x12 ∅5/32x15/32” 2PCS	**C**  white zinc M8x12 ∅5/16x15/32” 24PCS
D  Colored Zinc M8x14 ∅5/16x17/32” 4PCS	**E**  M8x18 ∅5/16x23/32” 8PCS	**F** 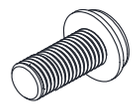 M8x30 ∅5/16x1x3/16” 12PCS
G  M8x40 ∅5/16x1x37/64” 4PCS	**H**  white zinc M8x50 ∅5/16x1x31/32” 4PCS	**I**  M8x60 ∅5/16x2x23/64” 2PCS
J  M6x10 ∅15/64x25/64” 8PCS	**K** 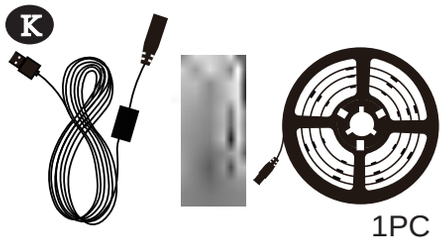 1PC	**M** 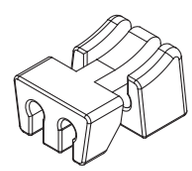 8PCS
N 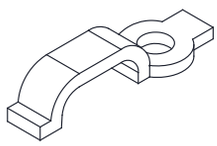 4PCS	**O**  M4x10 ∅5/32x25/64” 16PCS	**P** 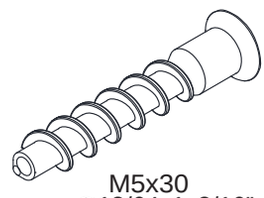 M5x30 ∅13/64x1x3/16” 16PCS
Q 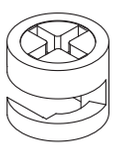 φ15x9.5 ∅19/32x3/8” 18PCS	**R** 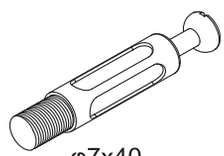 φ7x40 ∅9/32x1-37/64” 18PCS	**S** 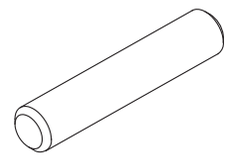 φ6x40 ∅15/64x1-37/64” 22PCS
T 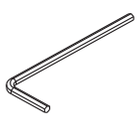 M4 ∅5/32” 1PC	**W** 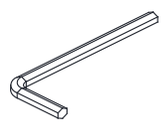 M5 ∅ 3/16” 1PC	**Y1** 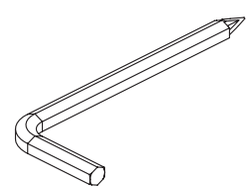 M8 ∅ 5/16“ 1PC

PARTS LIST

Y2 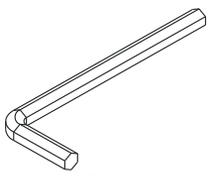 M8 ∅5/16” 1PC	Z 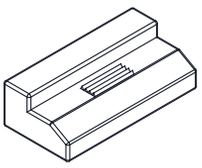 20PCS	U 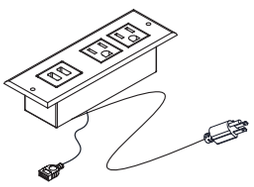 1PC
Z1 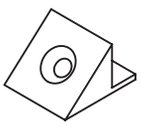 12PCS		

Ruler - Use this ruler to help correctly identify the screws

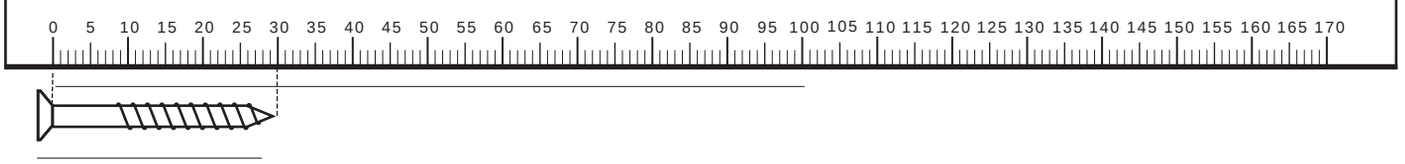

The lenath of the screw is measured from the rod part excluding the screw cap (30mm screw shown）

Please make sure to check that all screws are tightened after completing the entire installation.

CUSTOMER SERVICE GUIDE

Thank you for choosing our product! We are committed to providing you with excellent service. If you find any missing parts, damaged packaging, or product damage after receiving all packages, please follow the steps below to quickly contact our customer service team. We will do our best to resolve your issue.

1. Missing Parts

Verify Parts:
1. Refer to the Parts List in the manual to verify the name, specifications, and quantity of the missing parts.
2. Take a clear photo of the parts list and mark the missing parts with detailed information, e.g., “Missing 5 pieces of M6X30mm screws.”

2. Product or Packaging Damage

If it affects normal use:
Steps:
1. Take clear photos or videos showing the damaged parts and the extent of the damage (multiangle shots are recommended).
2. Email the photos/videos along with order details

Resolution:
After verification, we will arrange for a replacement part, product exchange, or refund as quickly as possible.

If it does not affect normal use:
Steps:
1. Contact our customer service team
2. Provide a description of the damage and include relevant photos or videos.

Resolution:
We will provide repair guidance or an appropriate compensation plan based on the specific situation.

Helpful Tips

To process your issue efficiently, please prepare the following information:
· Order details (order number, purchase platform, purchase date).
· Clear photos or videos.
· We are committed to providing quick and professional solutions, no matter the size of the issue, to ensure your satisfaction.

Thank you for your trust and support! We hope you enjoy using our product!

STORAGE BED FRAME

ASSEMBLY INSTRUCTIONS - PLEASE KEEP FOR FUTURE REFERENCE

TWIN SIZE:

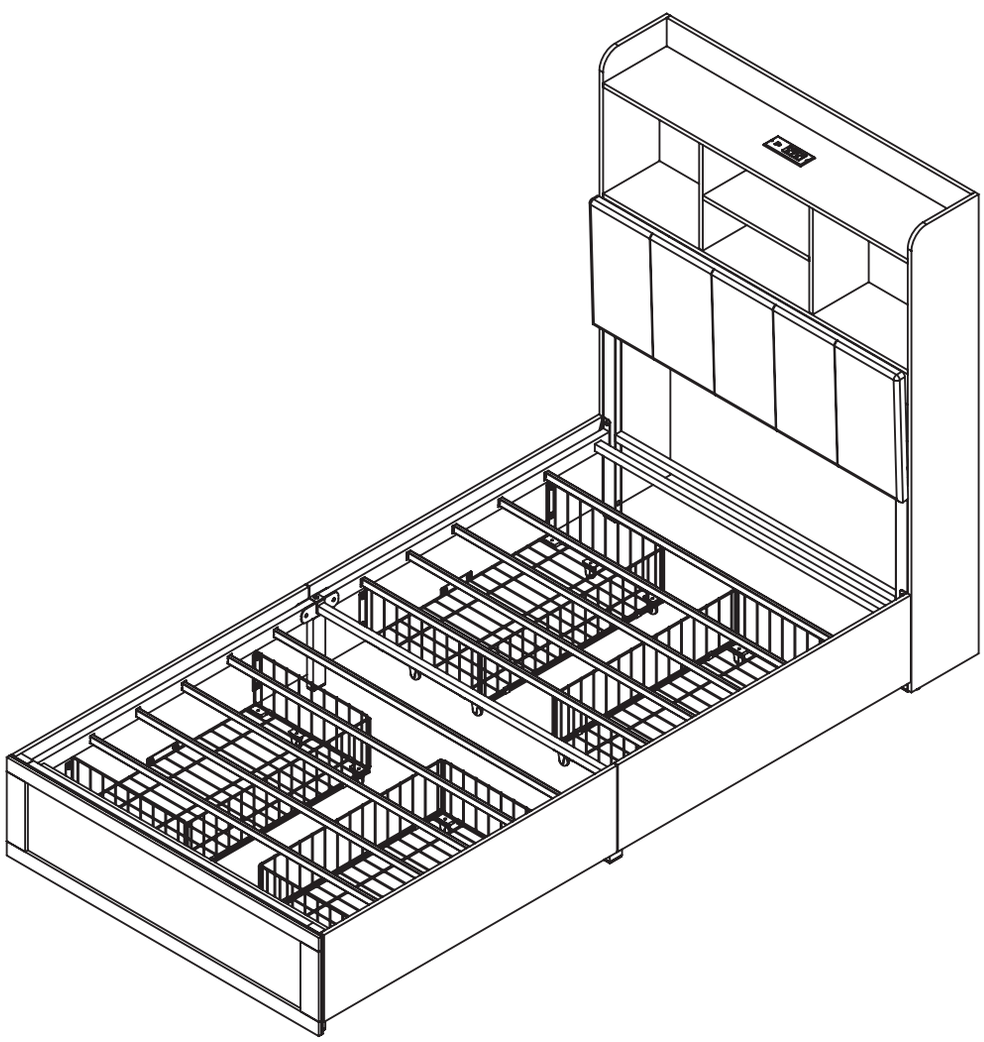

Important - Please read these instructions fully before starting assembly

TOOLS & EQUIPMENT



2 people needed

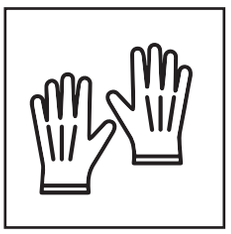

Work gloves

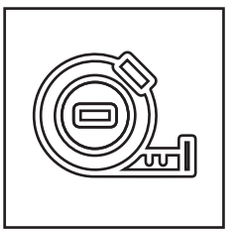

Tape measure

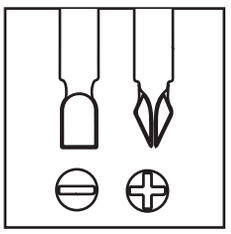

Other Tools Required
.Phillips Screwdriver
（Not Included）

SIMPLE ASSEMBLY STEPS

1. Read the manual carefully.
2. Check all parts and hardware.
3. Prepare necessary tools.
4. Have at least two adults for assembly.
5. Assemble on a flat surface for balance.
6. Do not tighten screws until assembly is complete.

Protect parts during assembly. Clean surfaces with a damp cloth only.

Customer Support:

If parts are missing or you need assistance, please contact us. When calling or emailing, please provide your order number and relevant product information.

HEADBOARD SECTION

The headboard section assembly requires a total of **17 labeled panels** shown in the diagram. Please locate all of them and prepare them for use.

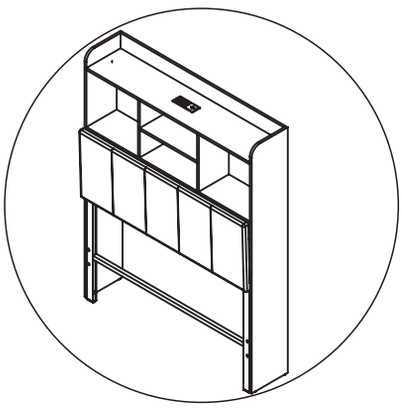

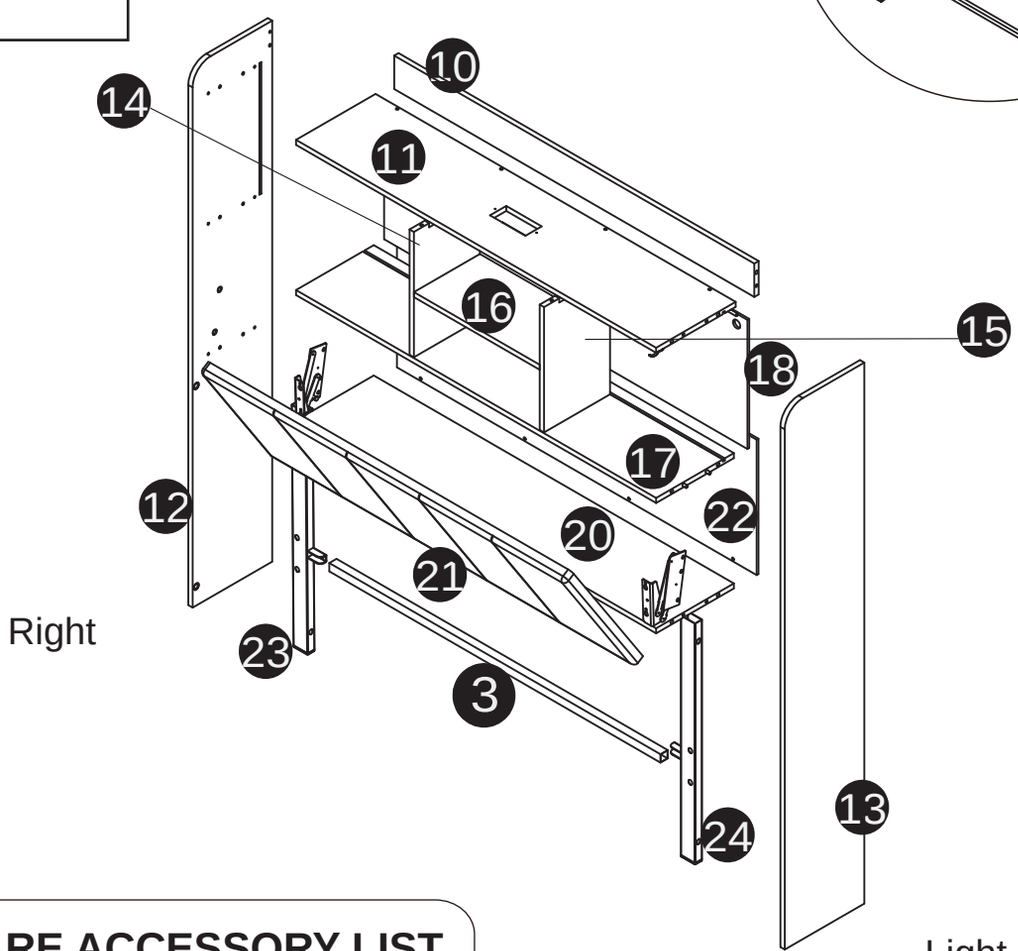

HARDWARE ACCESSORY LIST

A		∅3.2x12mm 16pcs
E		∅8x18mm 2pcs
H		∅8x50mm 4pcs
J		∅6x10mm 8pcs
R	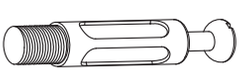	∅7x40mm 18pcs

S		∅6x40mm 22pcs
Q	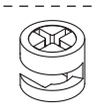	∅15x9.5mm 14pcs
P	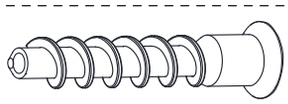	∅5x30mm 16pcs
N		4pcs
Z1	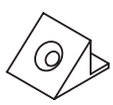	12pcs

Bedside Parts Section

Step 1

Do not obstruct the installation holes on both ends of the light strip, otherwise it will affect subsequent assembly

Accessory N is not locked tight at first

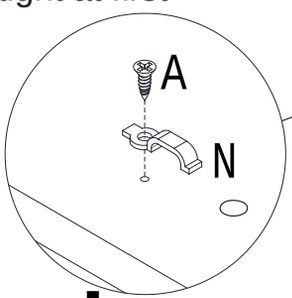

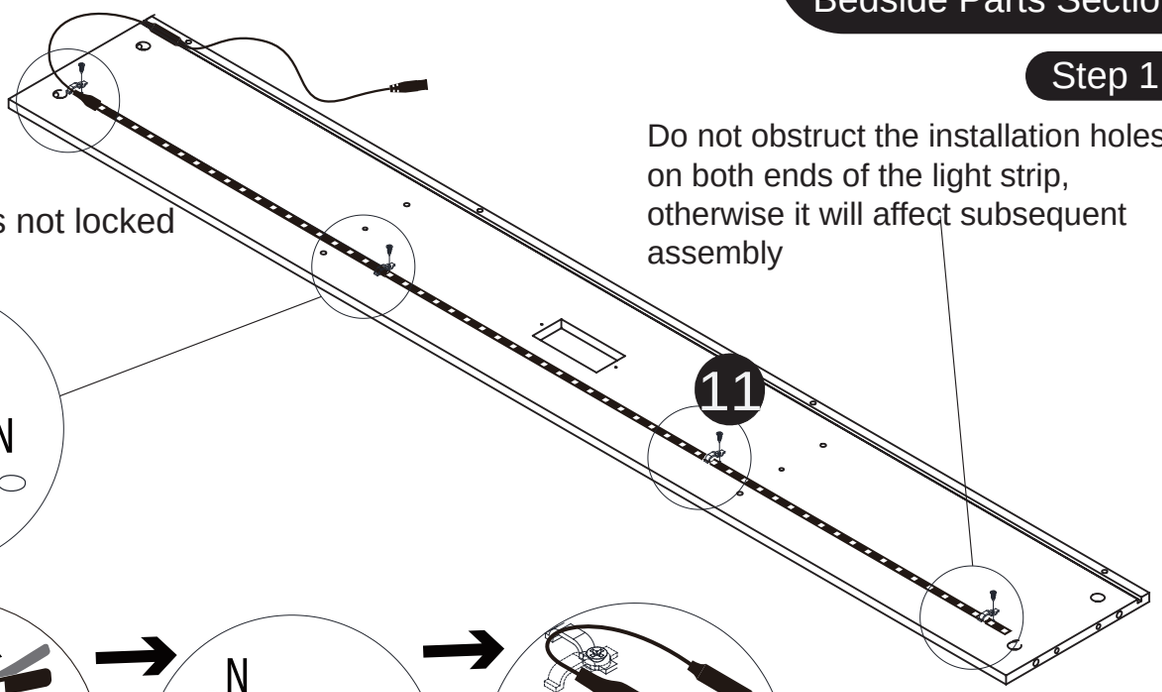

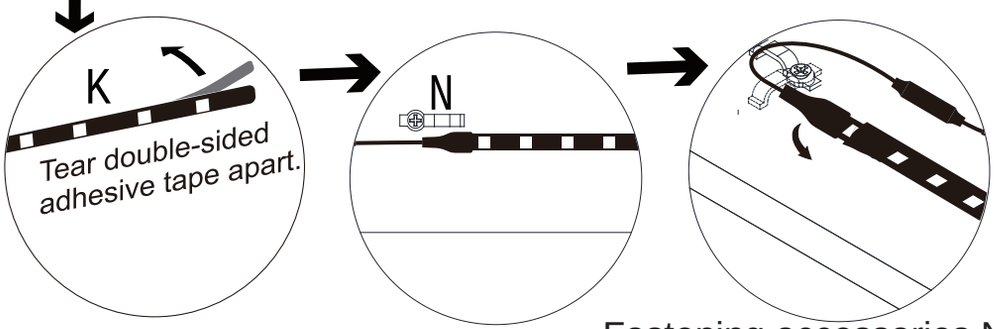

Fastening accessories N

A		∅3.2x12mm 4pcs

Bedside Parts Section

Step 2

Note: Assemble with holes facing upwards

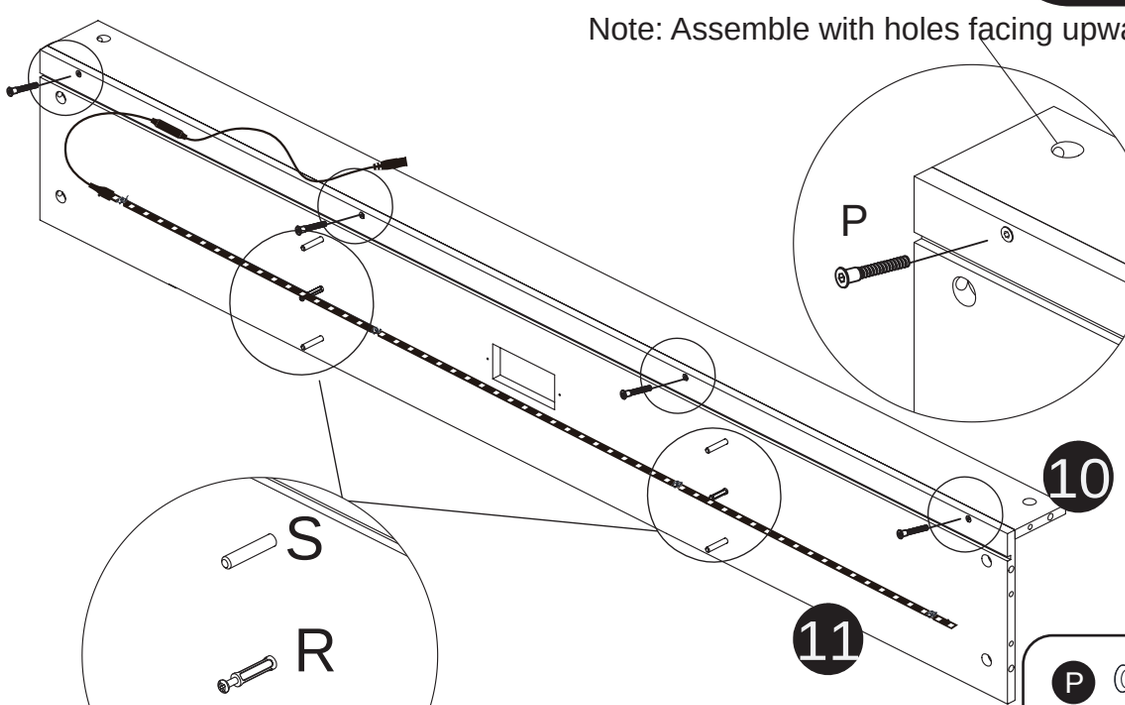

P		∅5x30mm 4pcs
R		∅7x40mm 2pcs
S		∅ 6x40mm 4pcs

Bedside Parts Section

Step 3

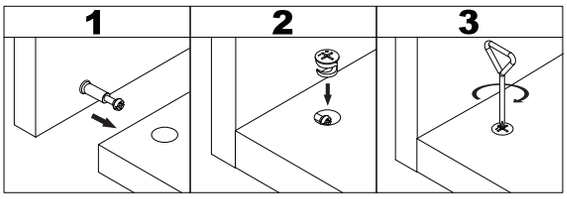

Make sure the LED strip can pass through the gaps on parts 14 and 15

S		∅6x40mm 4pcs
R		∅7x40mm 2pcs
Q		∅ 15x9.5mm 4pcs

Bedside Parts Section

Step 4

Note: Assemble with holes facing upwards

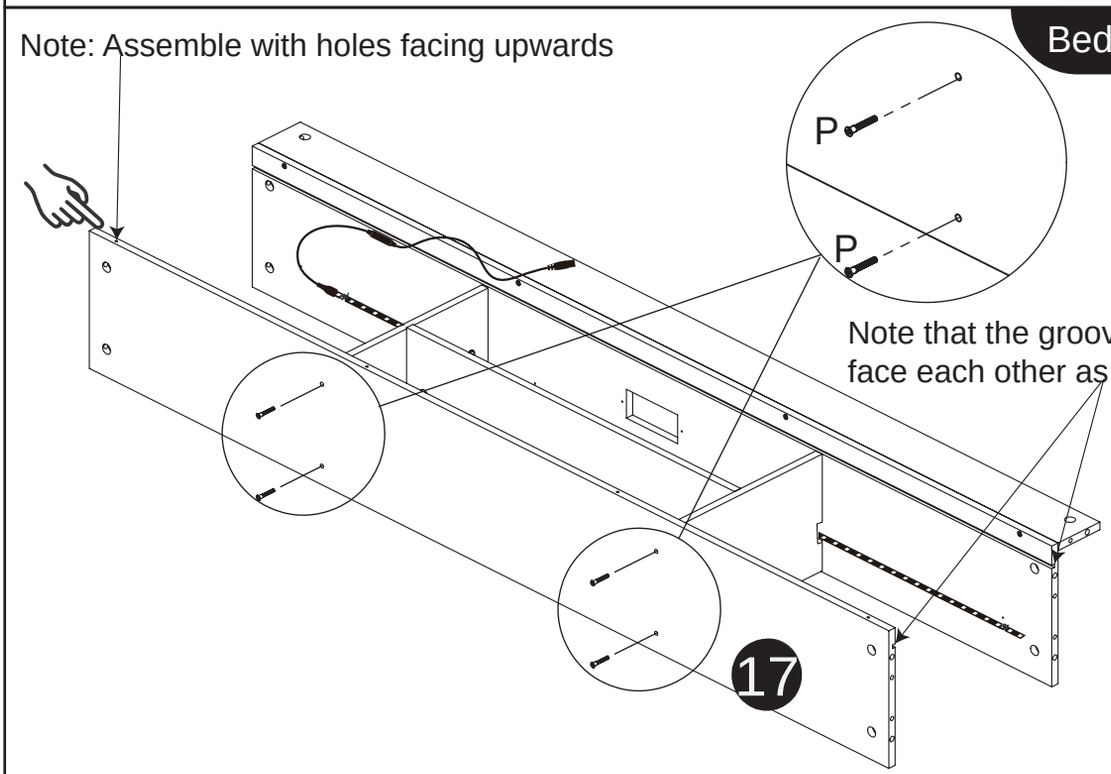

Note that the grooves here should face each other as shown in the figure

P		∅5x30mm 4pcs

Bedside Parts Section

Step 5

Note: Assemble with holes facing upwards

Note that the direction of the hole
on the part 18 as shown in the figure

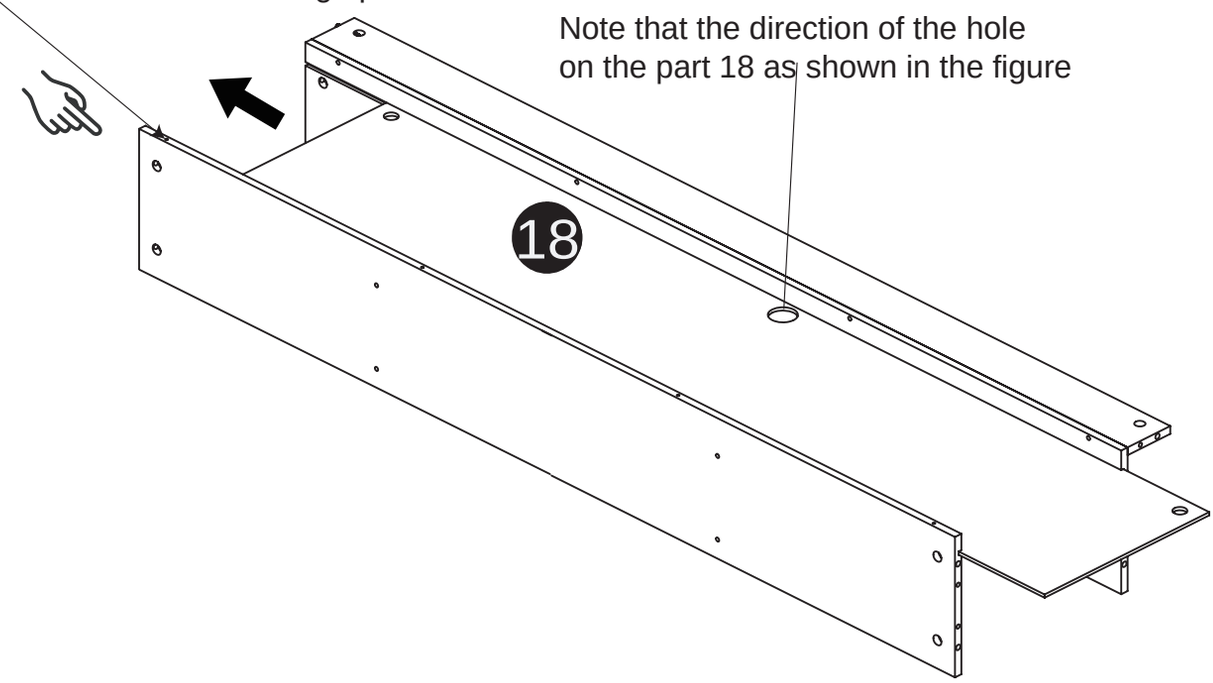

Bedside Parts Section

Step 6

Do not tighten the screws at first.
And making sure that the spring is assembled
properly (as shown on the graph).

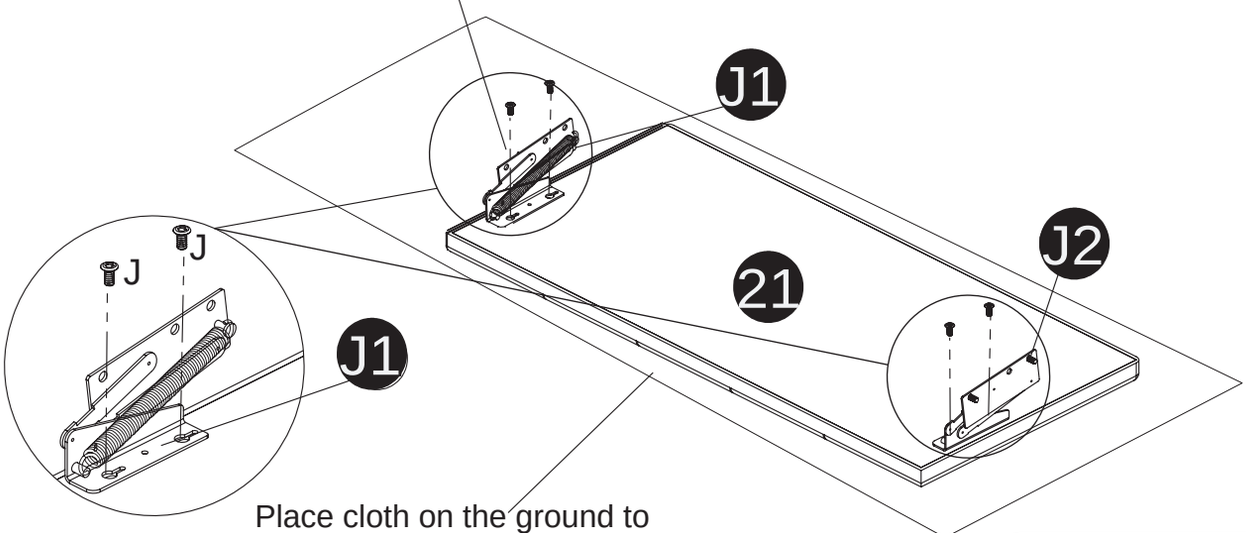

Place cloth on the ground to
prevent the cushion from getting dirty.

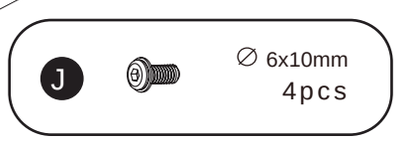

Bedside Parts Section

Step 7

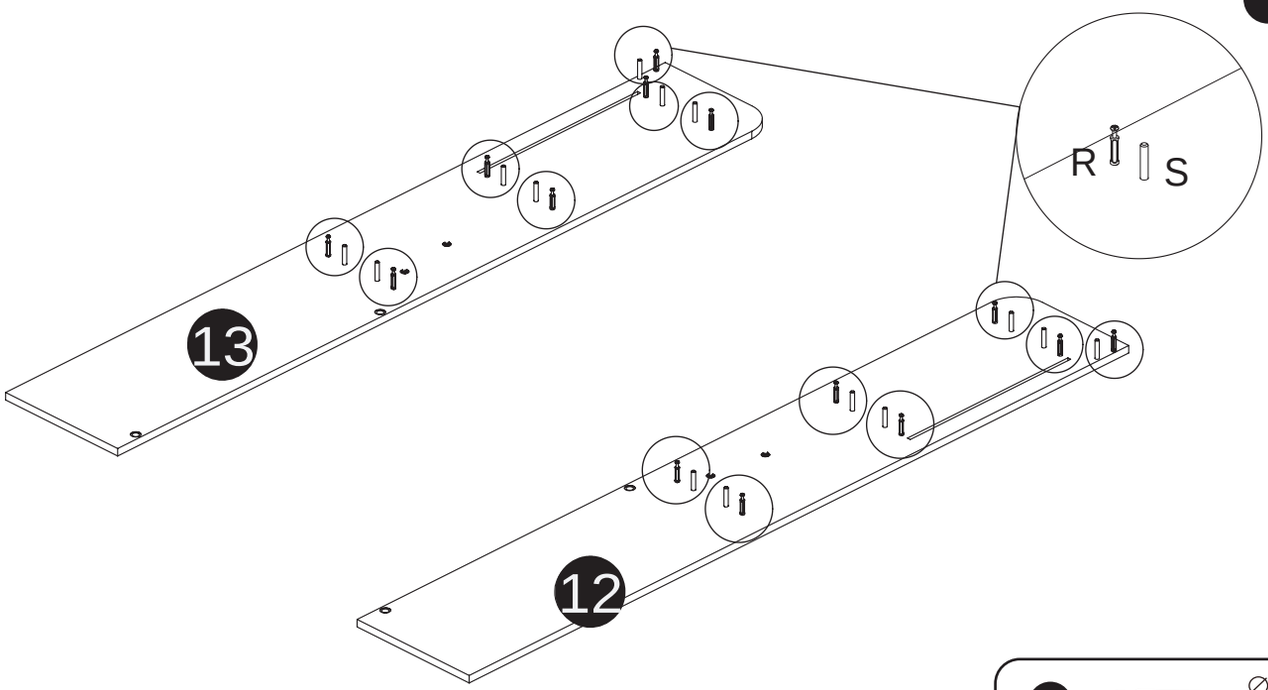

R		∅7x40mm 14pcs
S		∅ 6x40mm 14pcs

Bedside Parts Section

Step 8

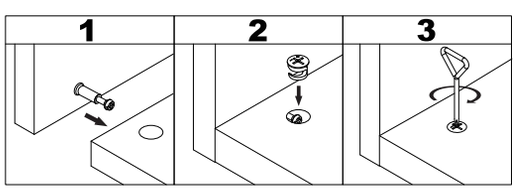

Q		∅ 15x9.5mm 10pcs

Bedside Parts Section

Step 9

Make sure the hole positions of J1 and J2 are aligned, it helps you to assemble easily.
Note: One components 21 are placed below components 13 and 12

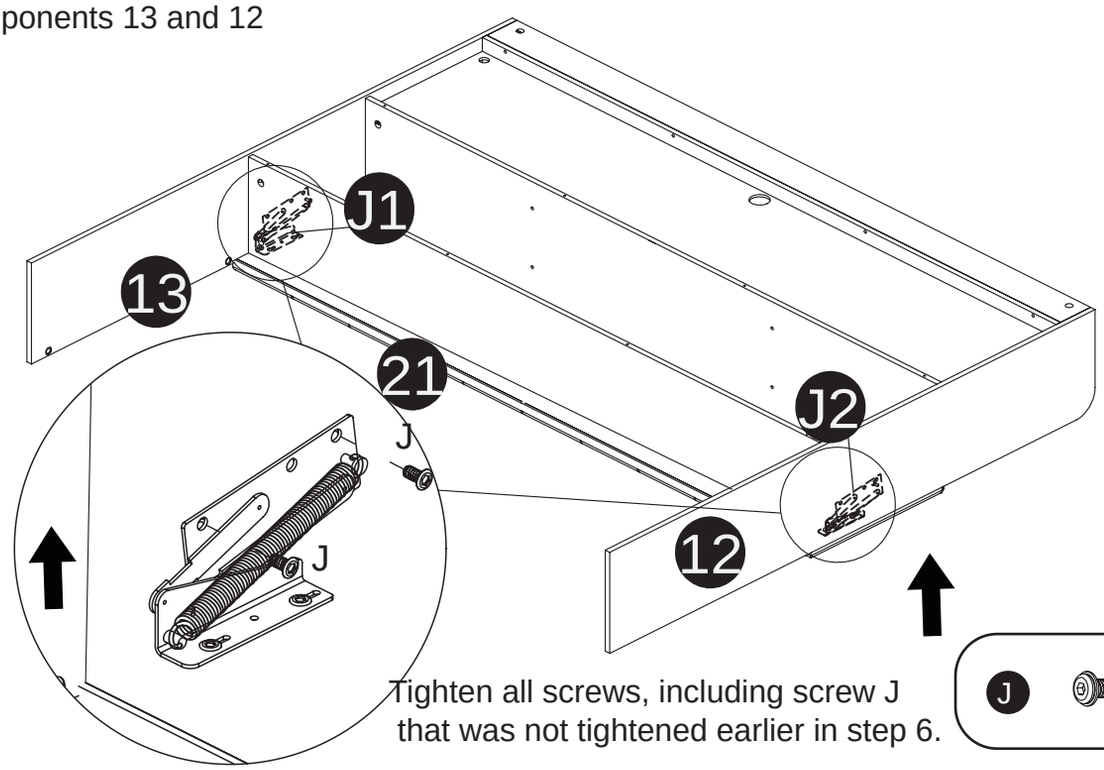

Tighten all screws, including screw J that was not tightened earlier in step 6.

J ∅ 6x10mm 4pcs

Bedside Parts Section

Step 10

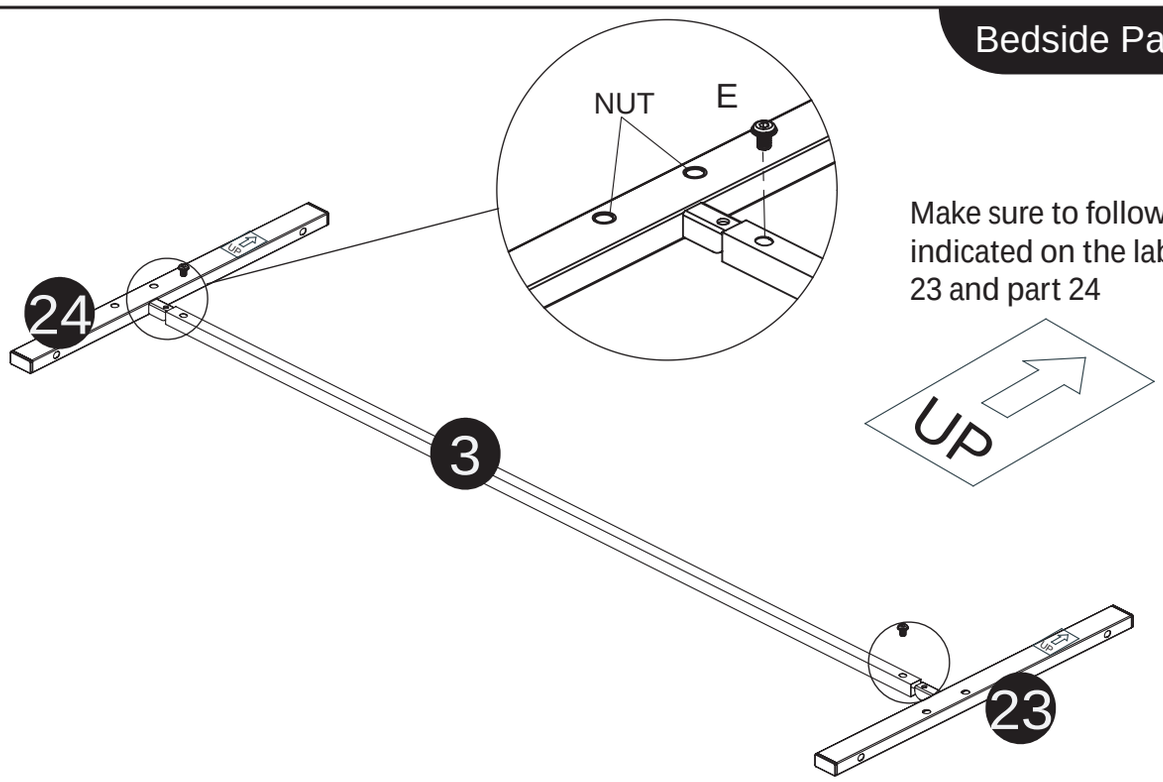

Make sure to follow the direction indicated on the label of part 23 and part 24

E ∅ 8x18mm 2pcs

Bedside Parts Section

Step 11

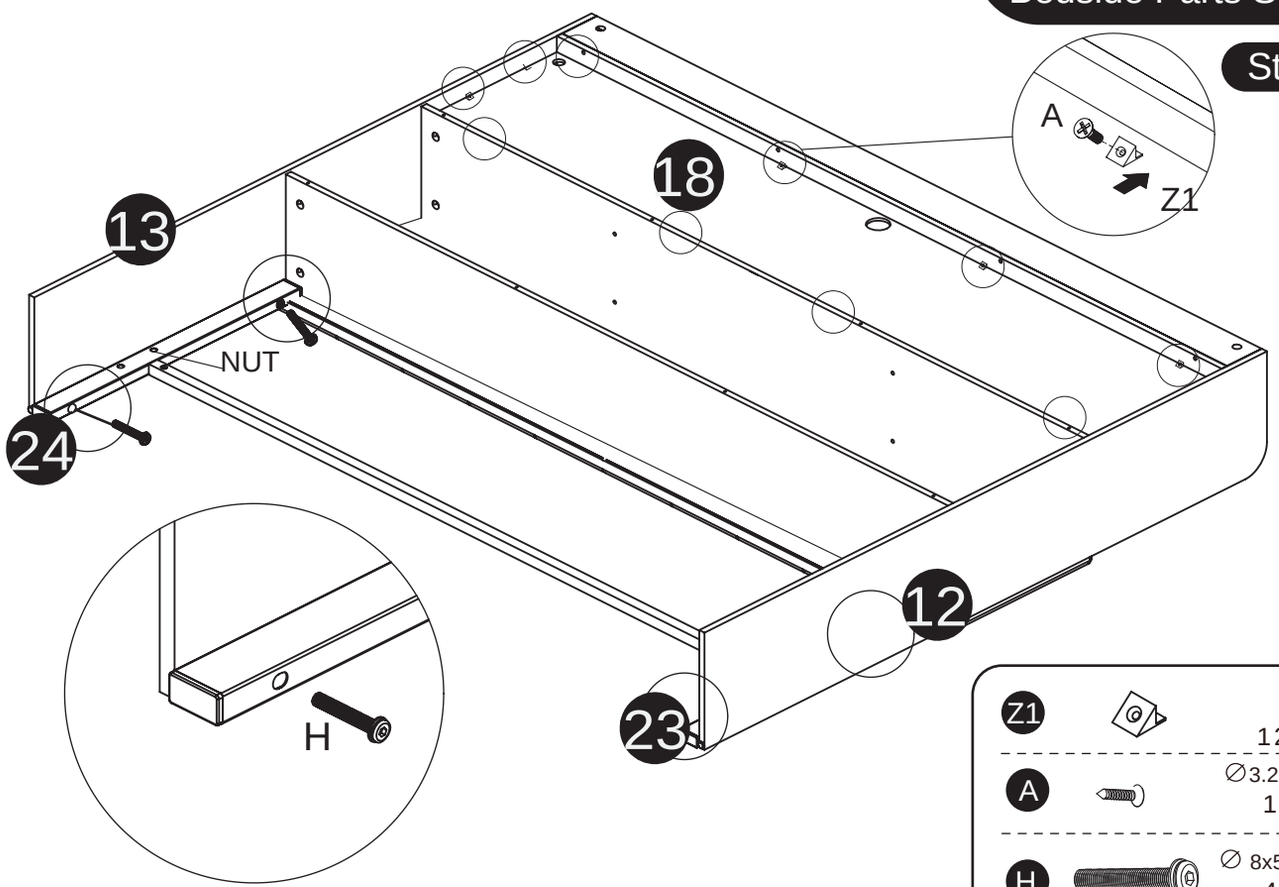

Z1		12pcs
A		∅3.2x12mm 12pcs
H		∅ 8x50mm 4pcs

Bedside Parts Section

Step 12

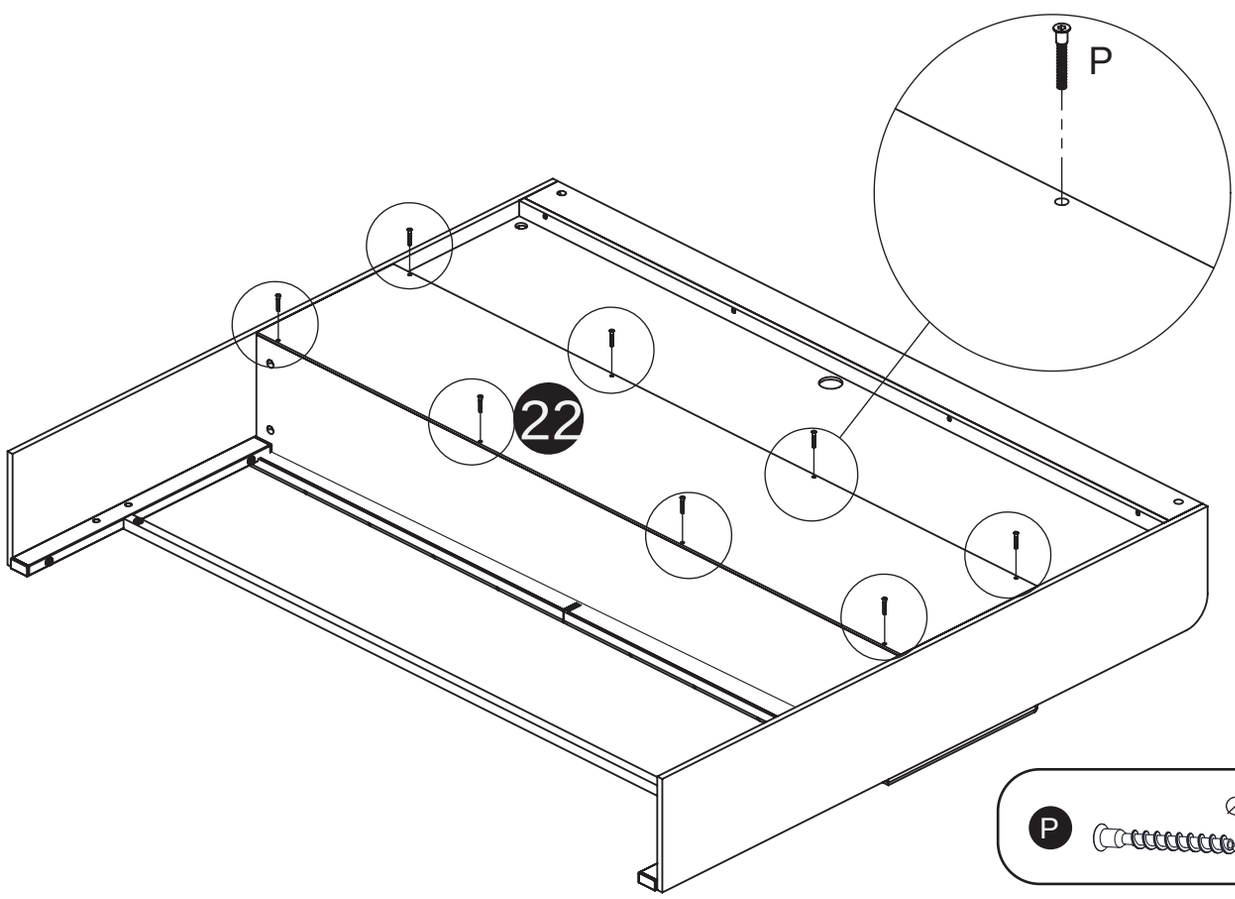

P		∅ 5x30mm 8pcs

FRAME PARTS SECTION

The Frame Parts section assembly requires a total of **19 labeled panels** shown in the diagram. Please locate all of them and prepare them for use.

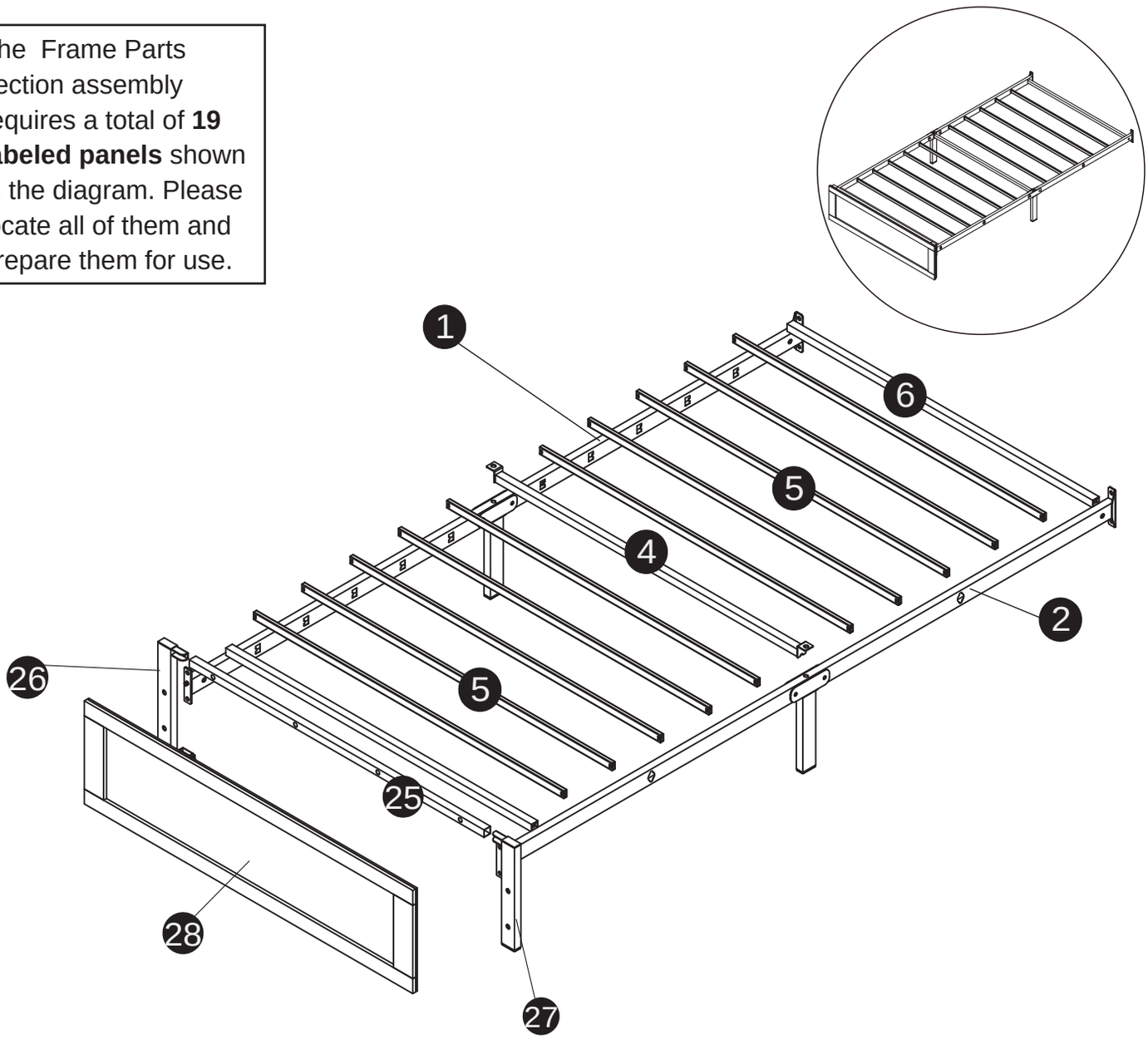

HARDWARE ACCESSORY LIST

E		∅8x18mm 6pcs
F	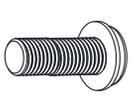	∅8x30mm 12pcs
G	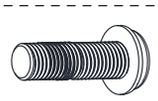	∅8x40mm 4pcs
I	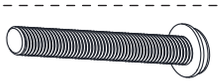	∅8x60mm 2pcs
B	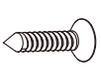	∅4.2x12mm 2pcs

Q	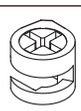	∅15x9.5mm 4pcs

Frame Parts Section

Step 13

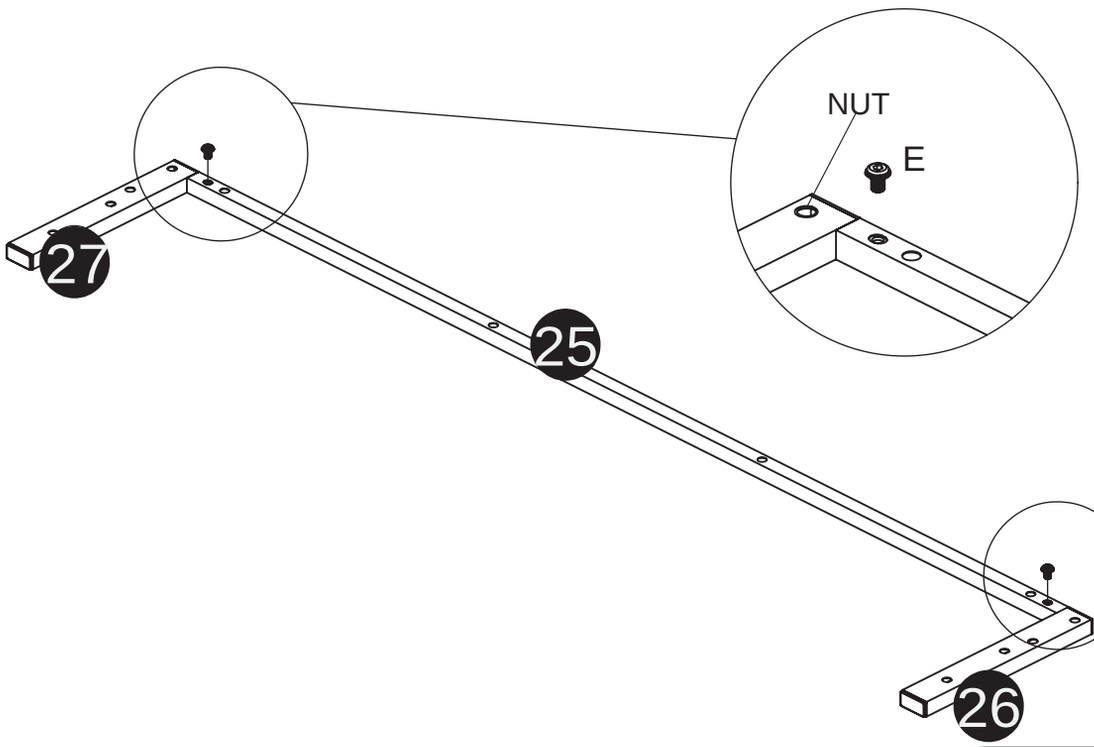

E ∅ 8x18mm 2pcs

Frame Parts Section

Step 14

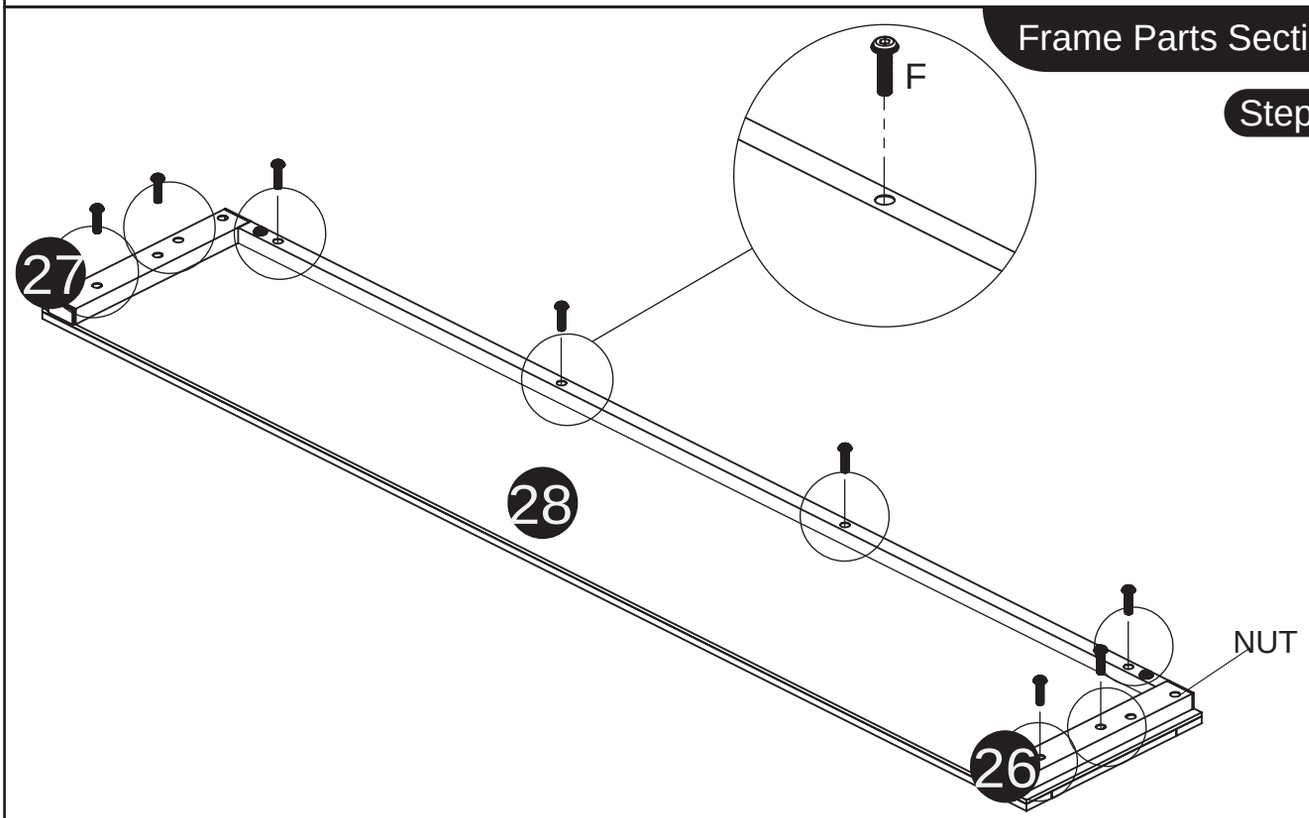

F ∅ 8x30mm 8pcs

Frame Parts Section

Step 15

WARNING!

Moving parts can crush or cut. Keep fingers,hands,and feet away to avoid injury

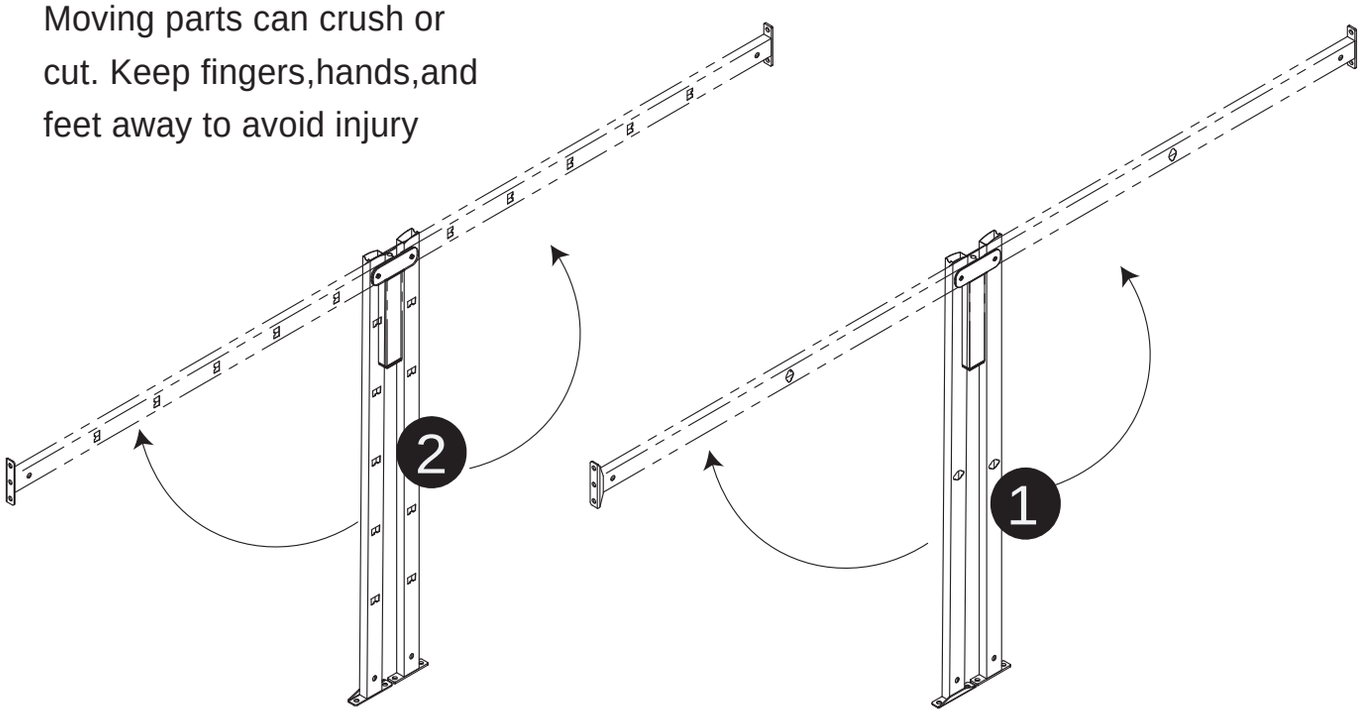

Frame Parts Section

Step 16

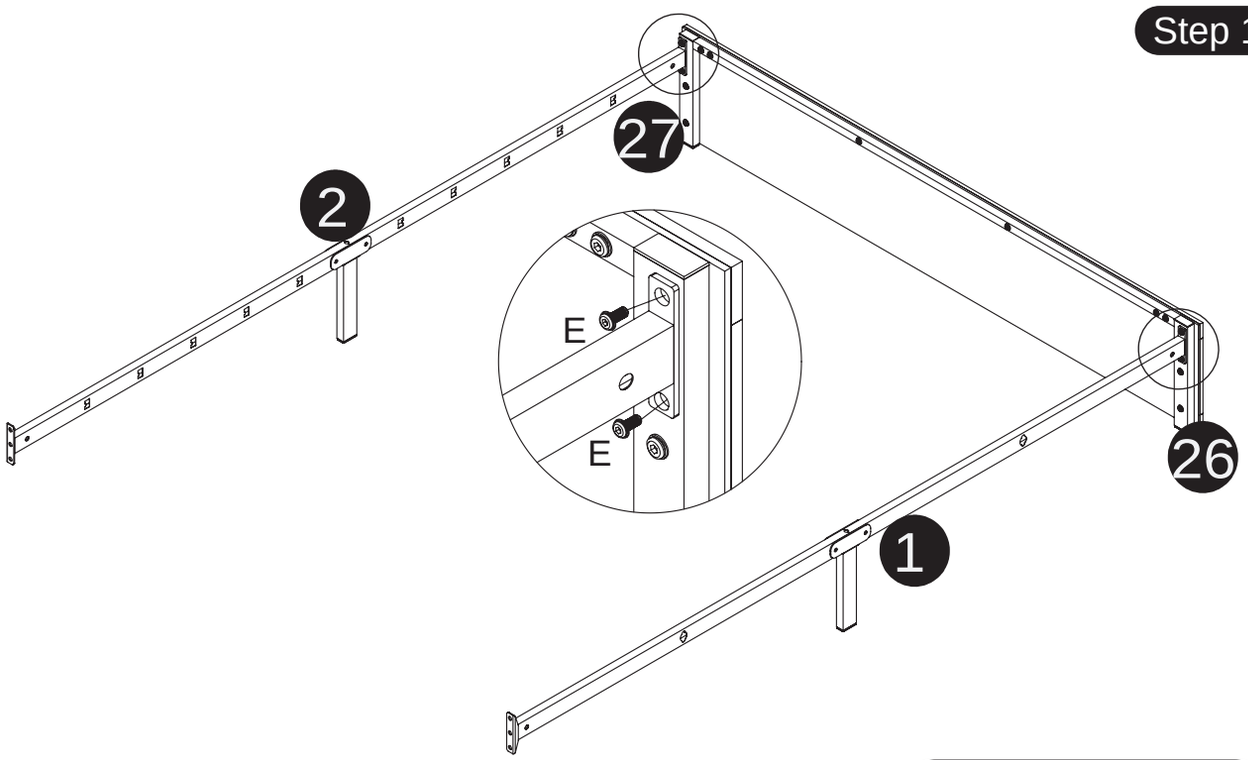

E ∅ 8x18mm 4pcs

Frame Parts Section

Step 17

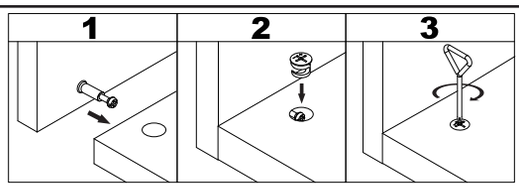

Q		∅15x9.5mm 4pcs
F		∅ 8x30mm 4pcs

Frame Parts Section

Step 18

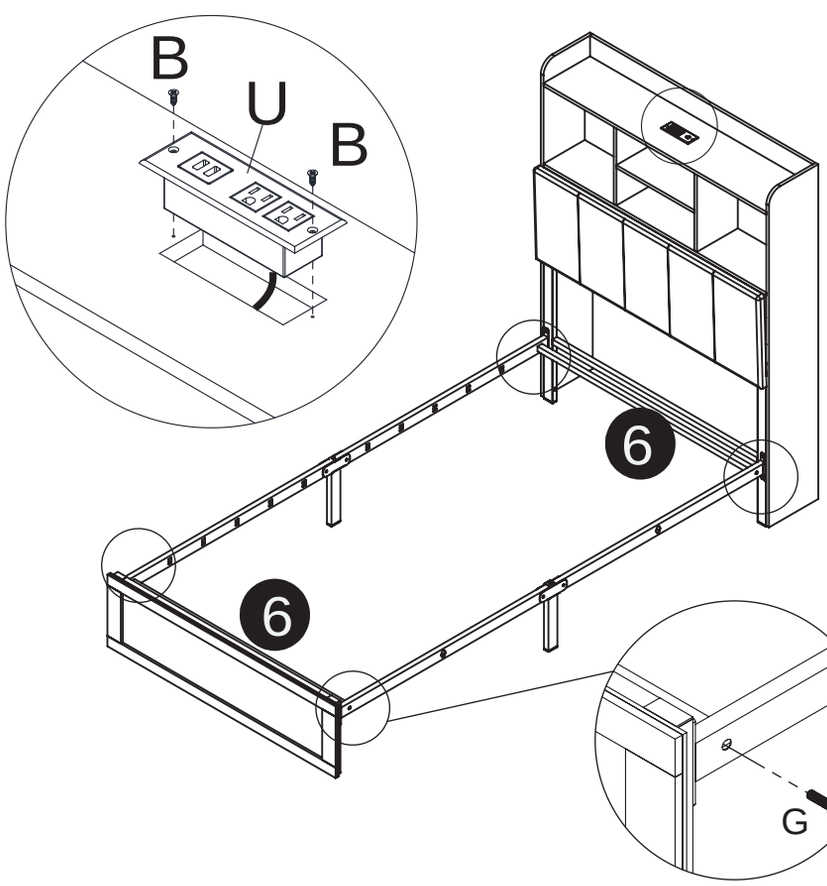

Note that the screws in this step can be locked properly!

B		∅4.2x12mm 2pcs
G		∅8x40mm 4pcs

Frame Parts Section

Step 19

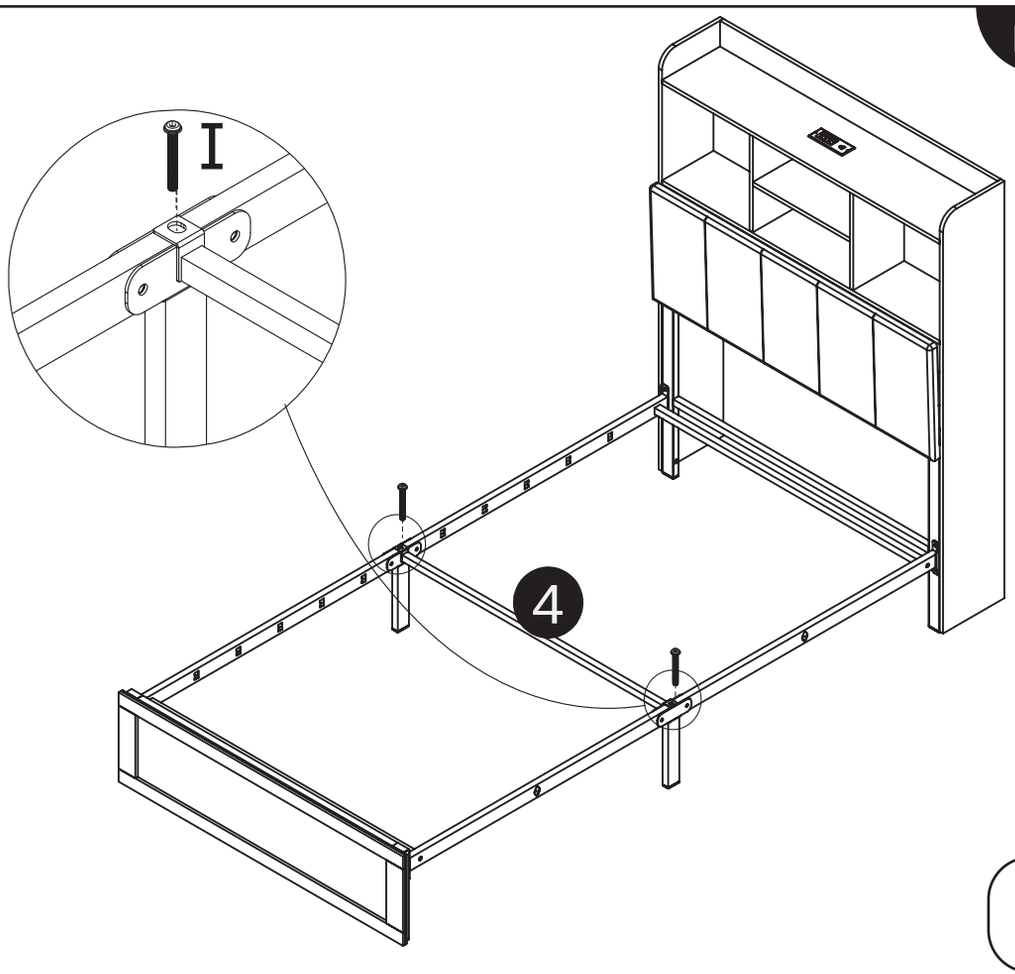

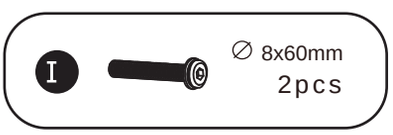

Frame Parts Section

Step 20

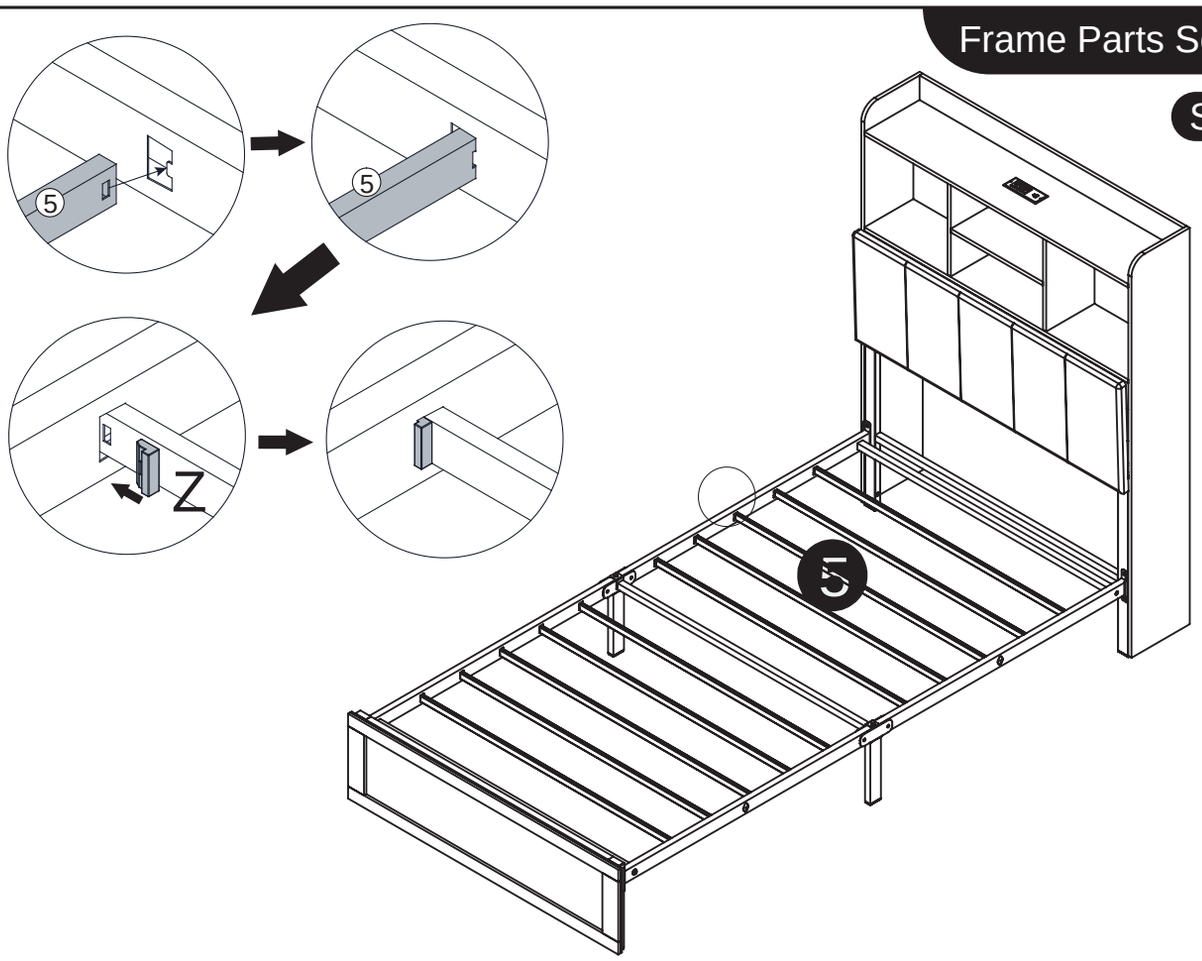

BEDSIDE PARTS SECTION

The Bedside Parts Section assembly requires a total of **8 labeled panels** shown in the diagram. Please locate all of them and prepare them for use.

X4

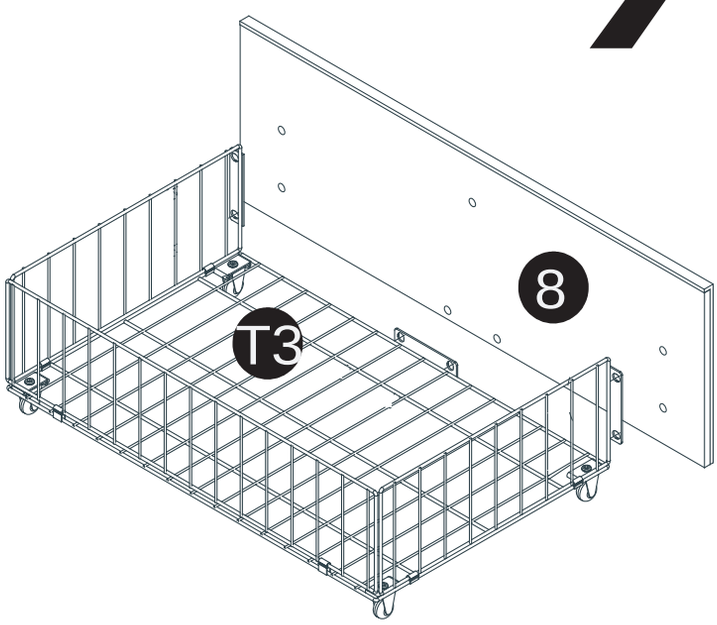

HARDWARE ACCESSORY LIST

C		∅8x18mm 24pcs
D		∅8x14mm Colored Zinc 4pcs
O		∅4x10mm 16pcs
M		8pcs

Step 21

Open the metal frame X4

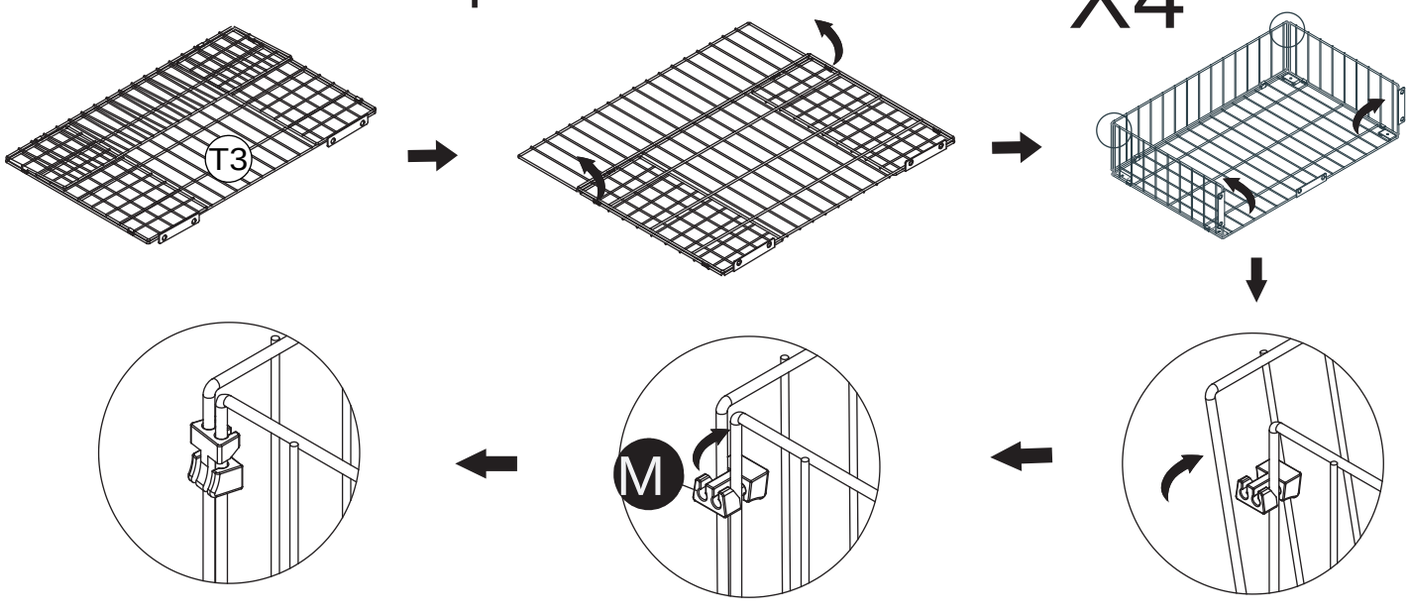

rotates part M at 90 degress and lock the metal frame as shown on the graph

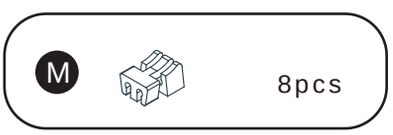

Check the components:
Find T3 components and the connecting buckles



1. Position the plastic clasp:
   Place the plastic clasp at the connection point of the two side panels.
   Ensure that the middle notch of the clasp is oriented correctly (as shown in the diagram) to facilitate the subsequent assembly.



2. Secure the plastic clasp:
   Flip the plastic clasp into the correct position, ensuring it completely covers the metal wire and locks firmly. Gently press or push it in with your hand until you hear a "click," indicating that the clasp is securely fastened onto the wire.



3. Check the connection stability:
   Gently shake the side panel and the drawer back panel by hand to ensure they are tightly connected through the clasp and metal wire, with no looseness.

Frame Parts Section

Step 22

X4

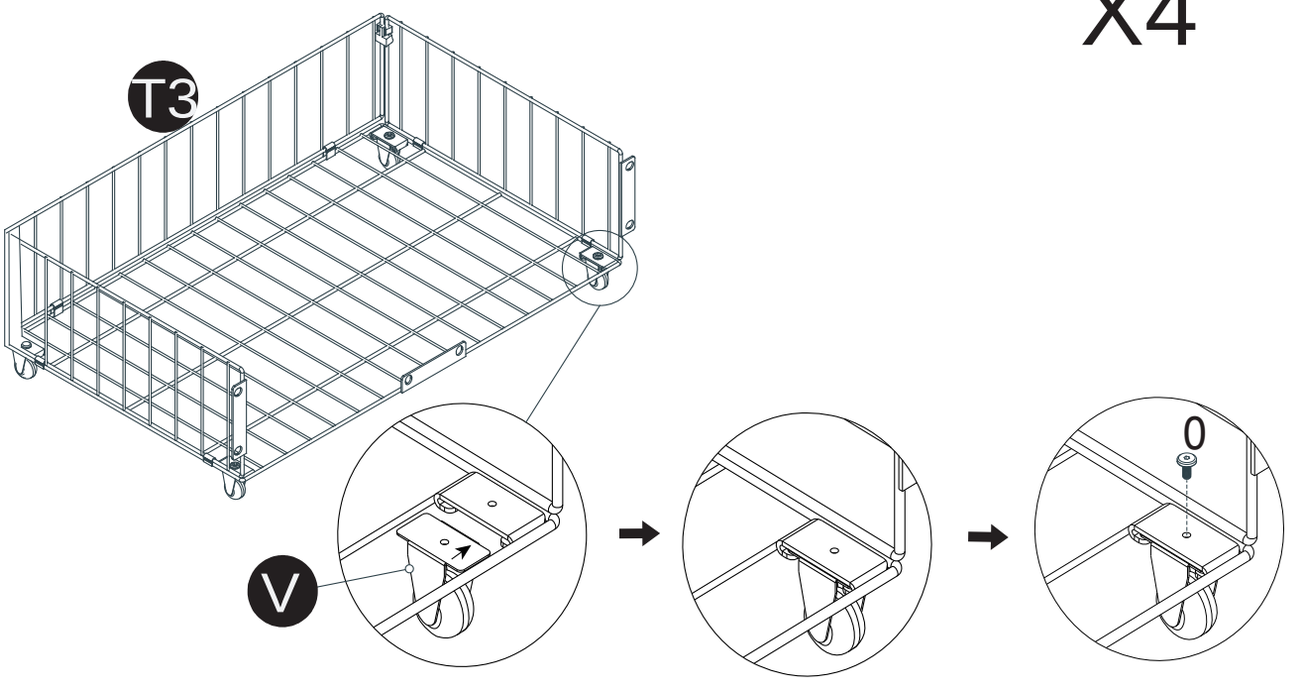

O ∅ 4x10mm 16pcs

Frame Parts Section

Step 23

X4

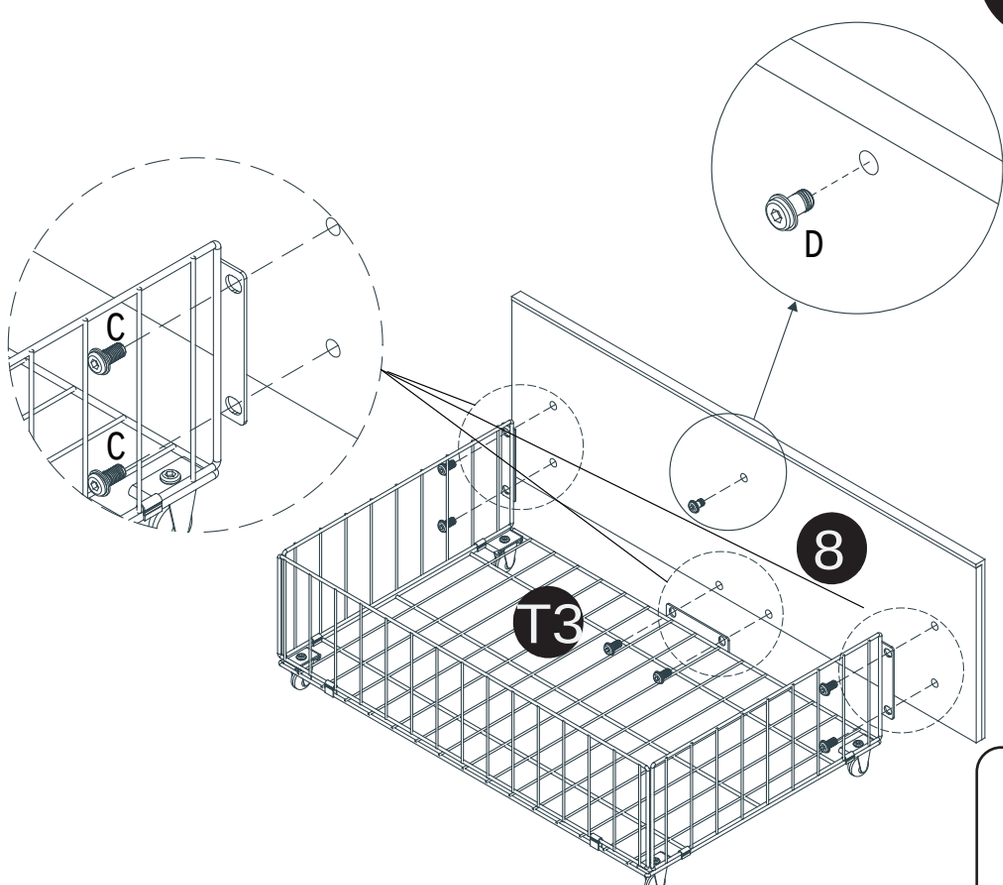

C white zinc ∅8x12mm 24pcs

D Colored Zinc ∅ 8x14mm 4pcs

DRAWER ADJUSTMENT STEPS

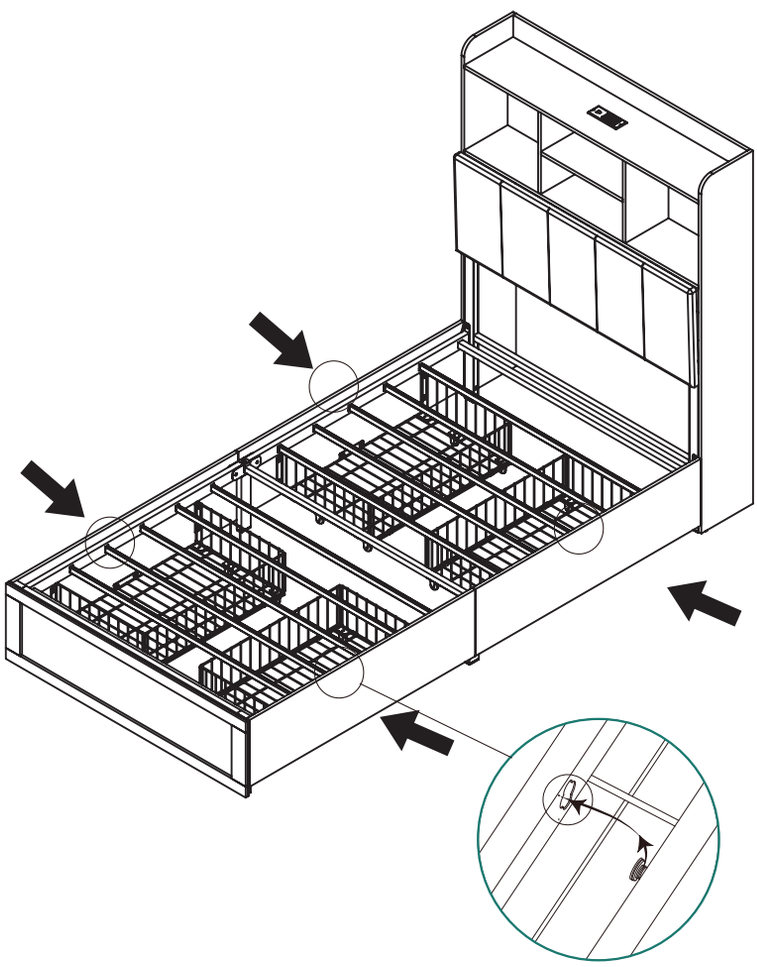

Installing the Bed Drawer:

Carefully lift the drawer from the bottom with your hand to provide proper support. Align the hooks on the drawer with the notches on the bed frame. Once aligned, gently push the hooks into the notches on the bed side until they are securely locked in place. Ensure the drawer is stable and properly connected before releasing it.

WIRING STEPS

NOTE: Please ensure that both the circular connector and the USB connector are connected.

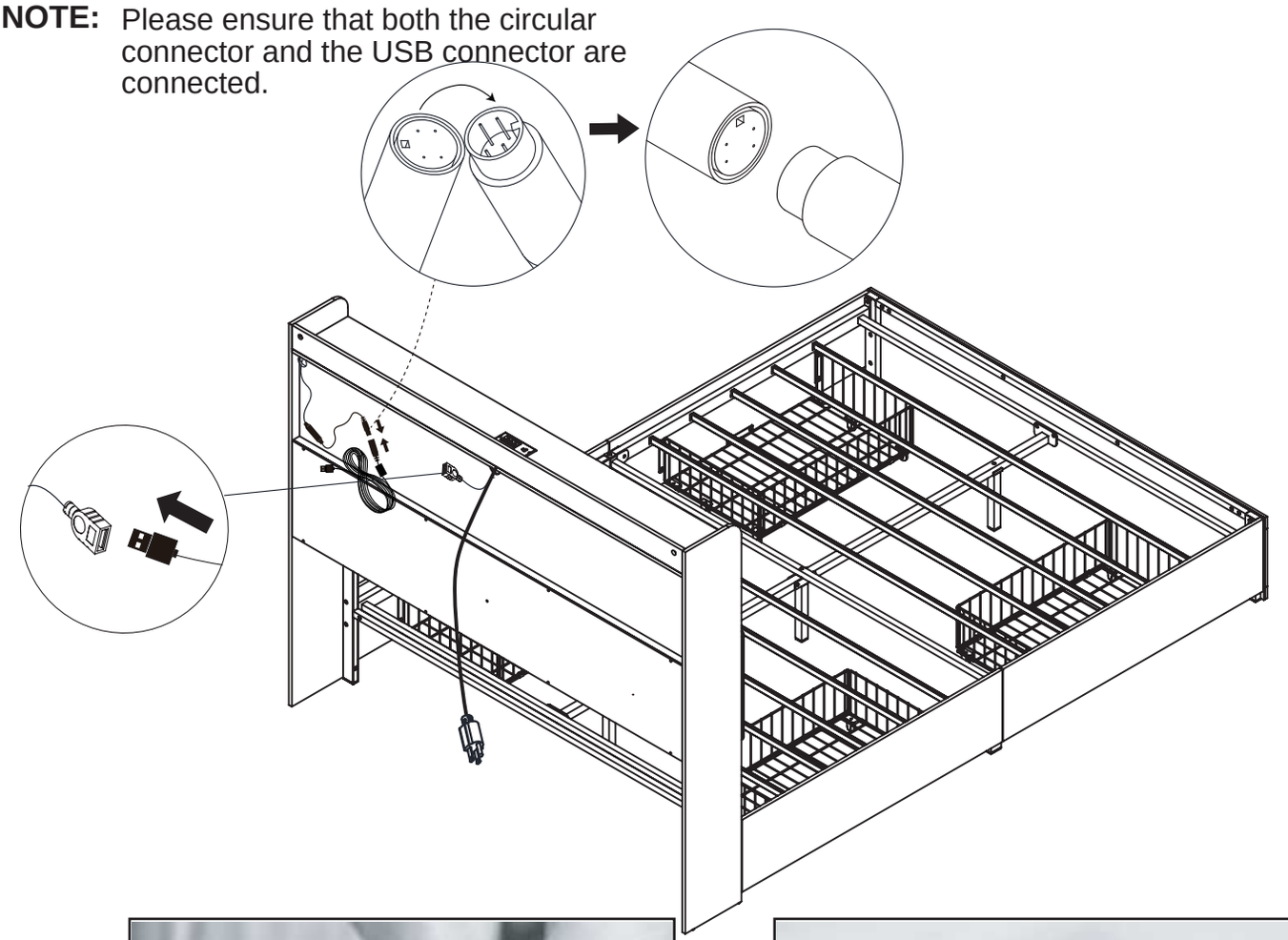



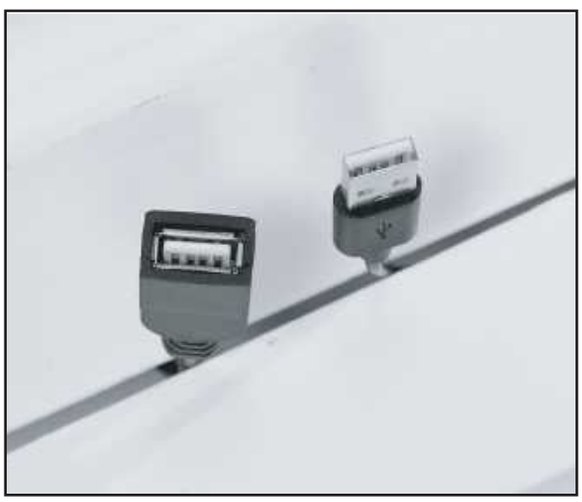

The LED strip wire connector:

As shown in the diagram, ensure that the connector pins and the pinholes are properly aligned before connecting

MAINTENANCE AND CARE

Daily Maintenance Tips

1. Prevent Pests

Keep wooden furniture away from damp areas to avoid pests and wood damage. Use a dehumidifier or air conditioner in humid seasons to keep the room dry.

2. Protect from Sunlight

Avoid placing furniture in direct sunlight to prevent cracking, discoloration, or fading. Use curtains or shades if sunlight is unavoidable.

3. Keep Away from Fire

Place furniture away from heat sources or open flames to avoid damage and maintain its condition

4. Regular Care

Apply furniture oil regularly to keep the wood shiny, prevent cracks, and extend its lifespan

5. Clean Often

Vacuum dust and debris, especially under beds, to keep the furniture clean and hygienic.

6. Stay Dry

Ensure good ventilation to prevent moisture buildup. Use a dehumidifier if needed to protect the wood.

7. Avoid Corrosive Liquids

Keep the furniture away from acidic or alkaline substances to protect its surface and durability.

8. Use a Damp Cloth

Clean with a well-wrung damp cloth to avoid water damage or swelling.