ASSEMBLY INSTRUCTIONS

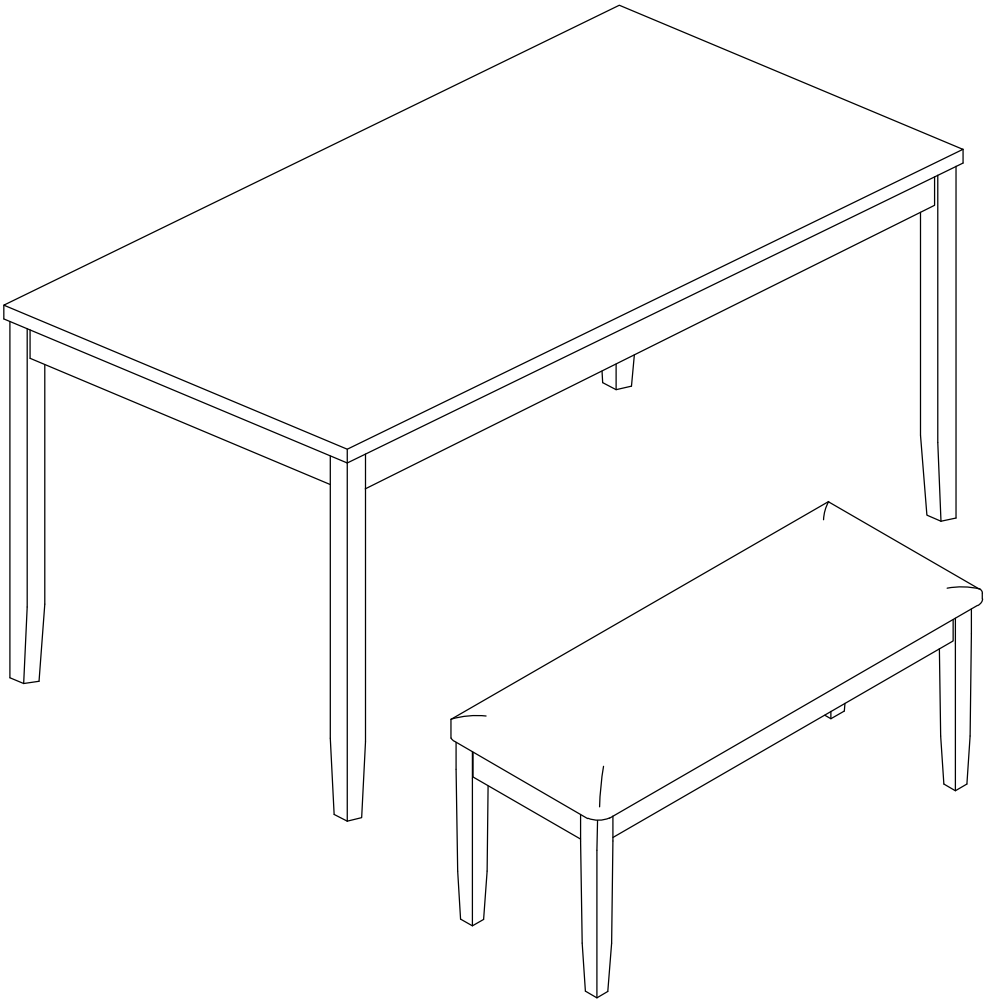

ASSEMBLY TIPS:

1. Remove hardware from box and sort by size.
2. Please check to see that all hardware and parts are present prior to start of assembly.
3. Please follow attached instructions in the same sequence as numbered to assure fast & easy assembly.

Part List

NO.	DIAGRAM	PART NAME	Q'ty
#1		Table Top	1 pc
#2		Table Legs	4 pcs
#3		Bench Seat Cushion	1 pc
#4		Bench Seat Frame	1 pc
#5		Bench legs	4 pcs

Hardware List

NO.	DIAGRAM	PART NAME	Q'ty
#A		Bolt Ø5/16" x 2-1/2"	8 pcs
#B		Spring washer Ø5/16"	8 pcs
#C		Flat washer Ø5/16"	8 pcs
#D		Allen key M5	1 pc
#E		Bolt Ø1/4" x 2-1/4"	8 pcs
#F		Spring washer Ø1/4"	8 pcs
#G		Flat washer Ø1/4"	8 pcs
#H		Screw #4 x 15mm	10 pcs
#I		Allen key M4	1 pc

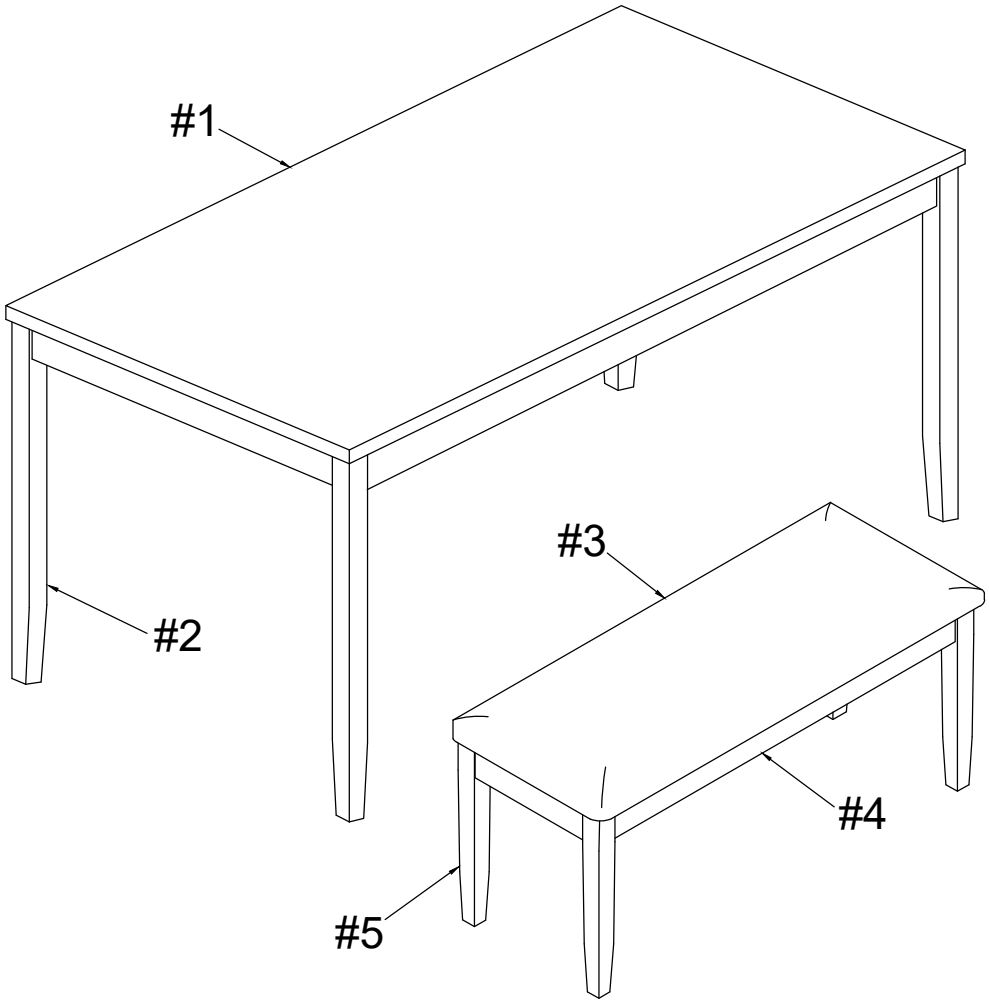

STEP 1

Tighten the bottom bolt first, then tighten the top bolt.

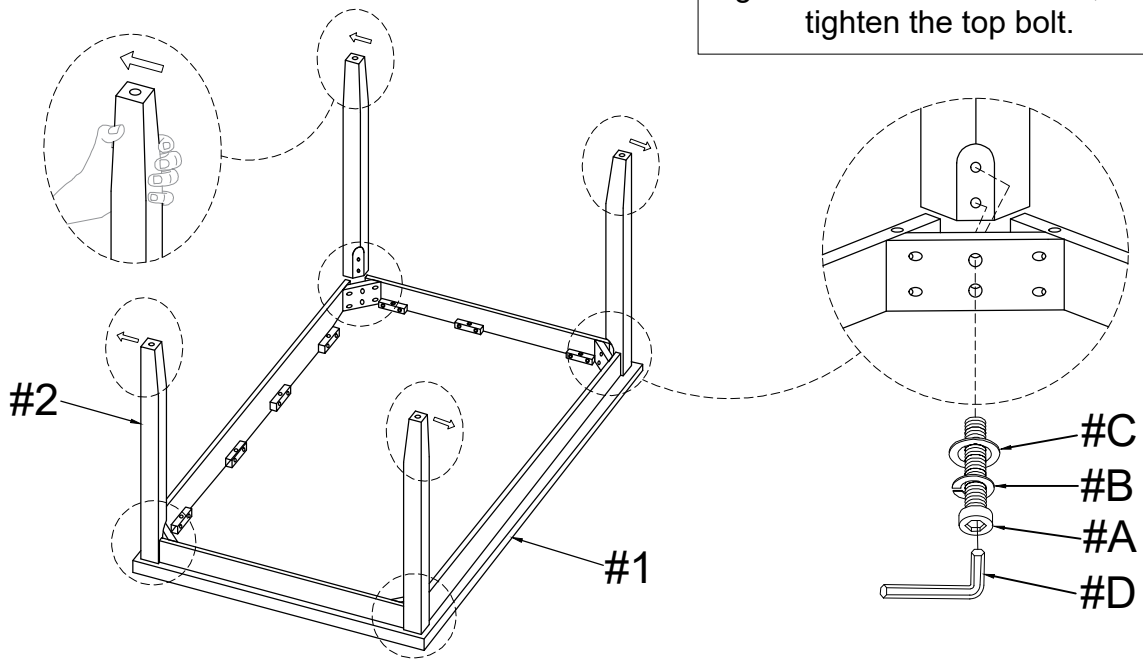

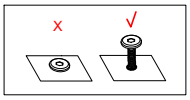

Loosely set screws, do not fully tighten

STEP 2

Tighten the bottom bolt first, then tighten the top bolt.

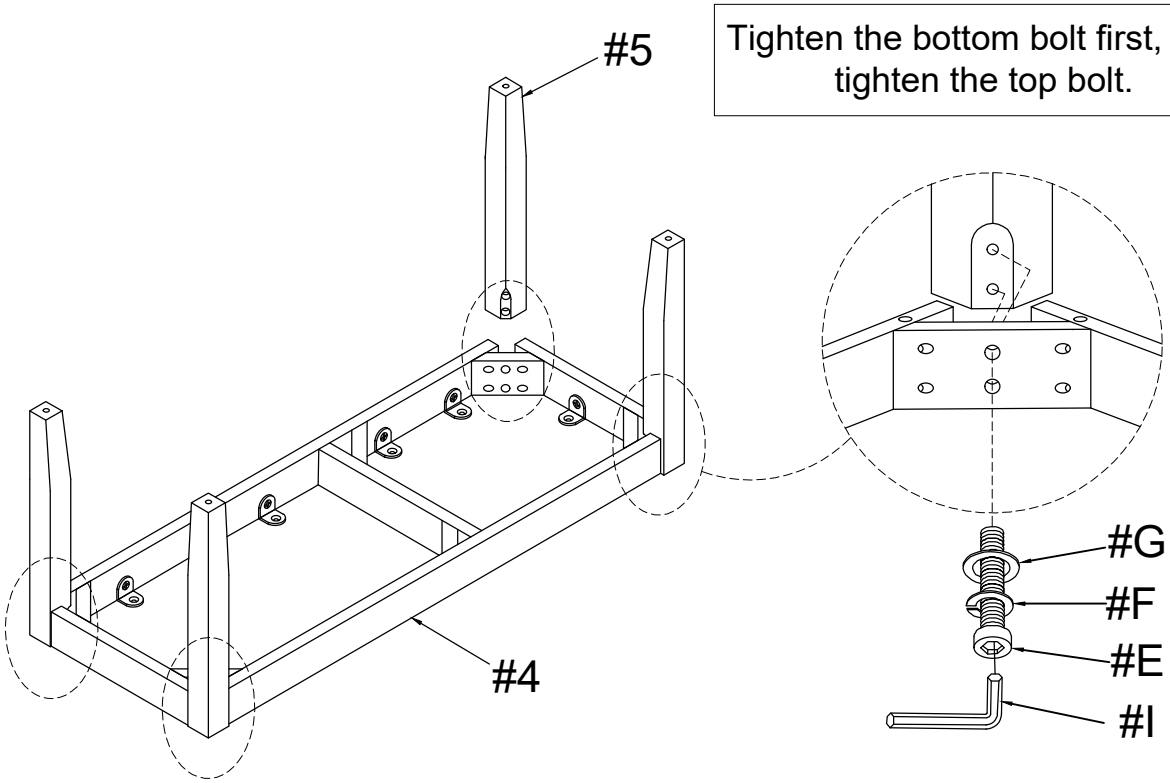

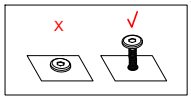

Loosely set screws, do not fully tighten

STEP 3

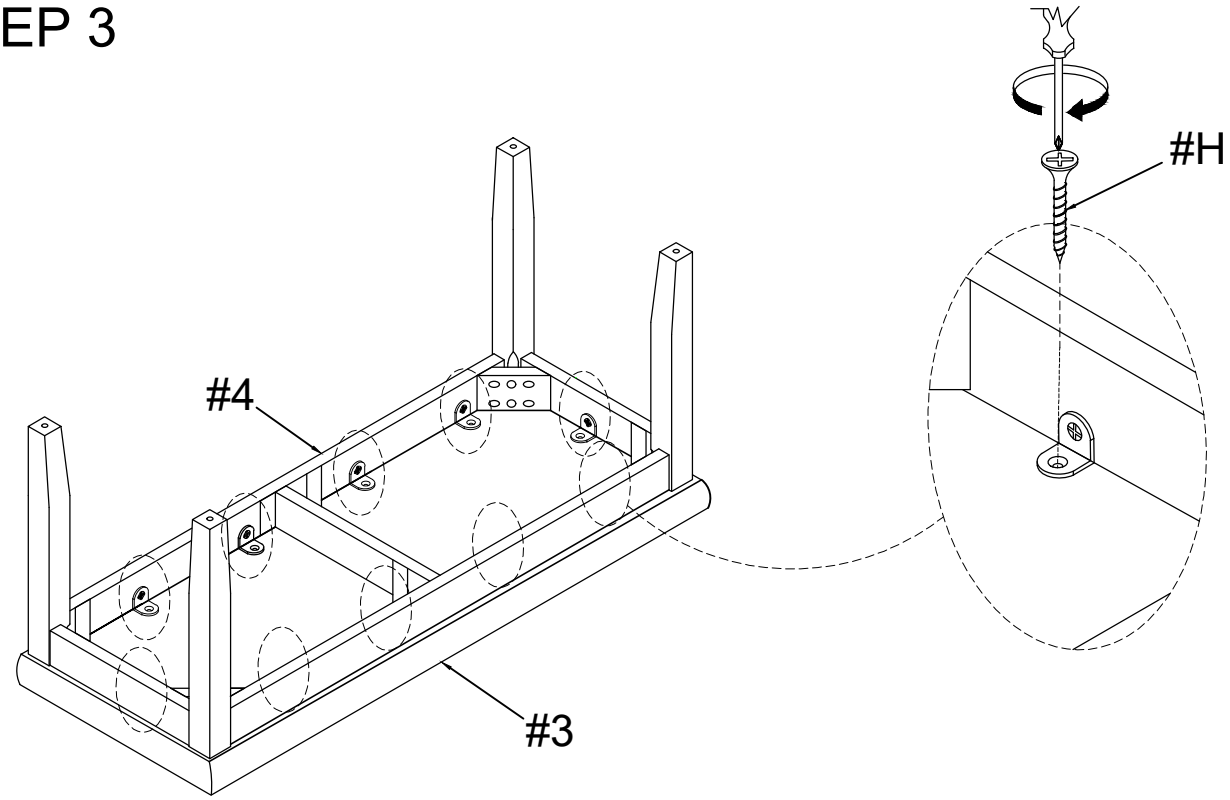

STEP 4

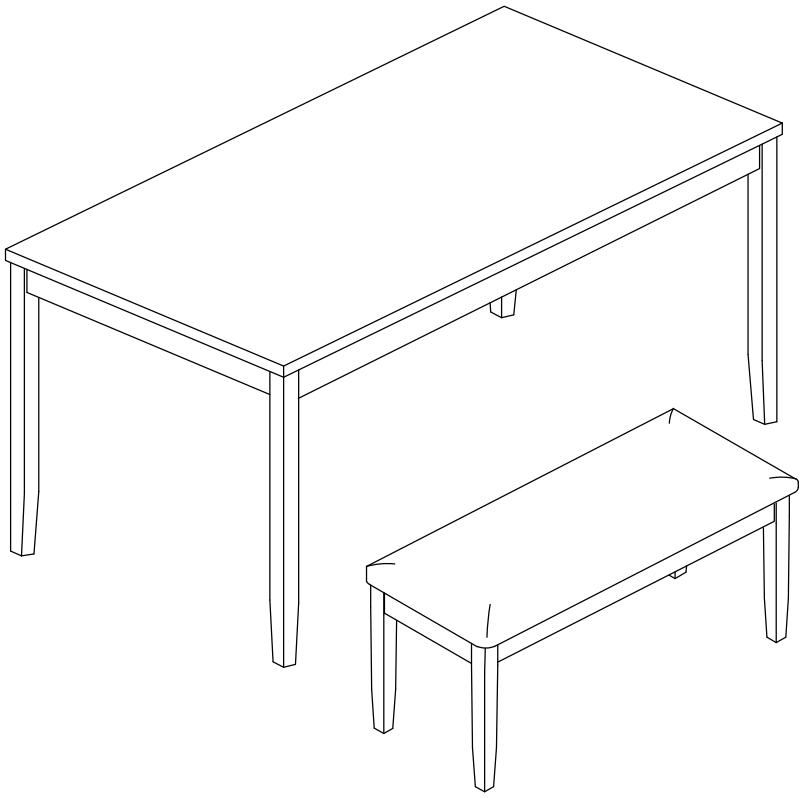

You can now tighten all the screws.
Keep all legs level during this step.