Assembly Instructions
SL-NRBS

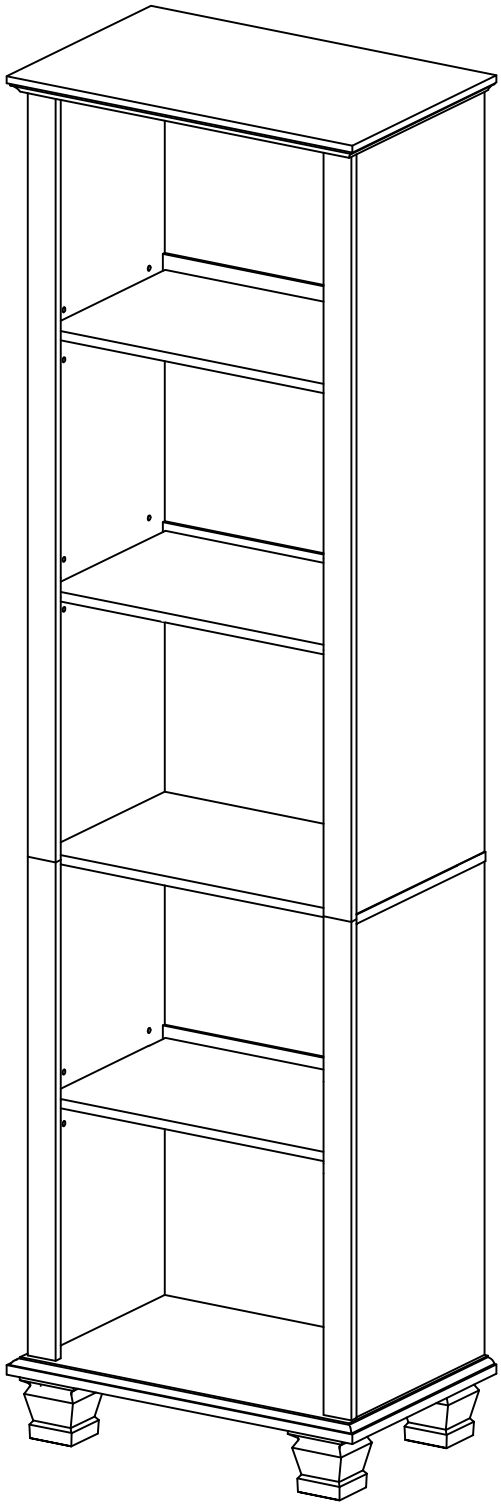

BEFORE STARTING

Before Using Product

Read each step carefully before starting.It is very important thateach step is performed in the correct order.If these steps are not followed in sequence,assembly difficulties will occur.

Make sure all parts are included.

Work in a spacious area and near where the unit will be used,preferably on a carpet,or use a piece of the cardboard packaging to protect your floor and product.

For a smooth assembly process,we suggest you keep a lite tightness for all the screws during assembly.After the whole product is assembled, firmly tighten all the screws.

⚠ WARNING

Do not allow children to climb on unit.

Avoid sharp objects or corrosive chemicals to prevent damage to the product.

During assembly,keep parts and packaging materials away from children and pets as there could be potential injury and choking hazards.

Please make sure that all objects are removed before moving the assembled unit.

The unit must be team lifted,not dragged or pushed.Failure to do so could cause instability,product collapse,and/or serious injury.

Be careful when using power tools to assemble your furniture.

Power tools may strip or damage the parts.

PART LIST

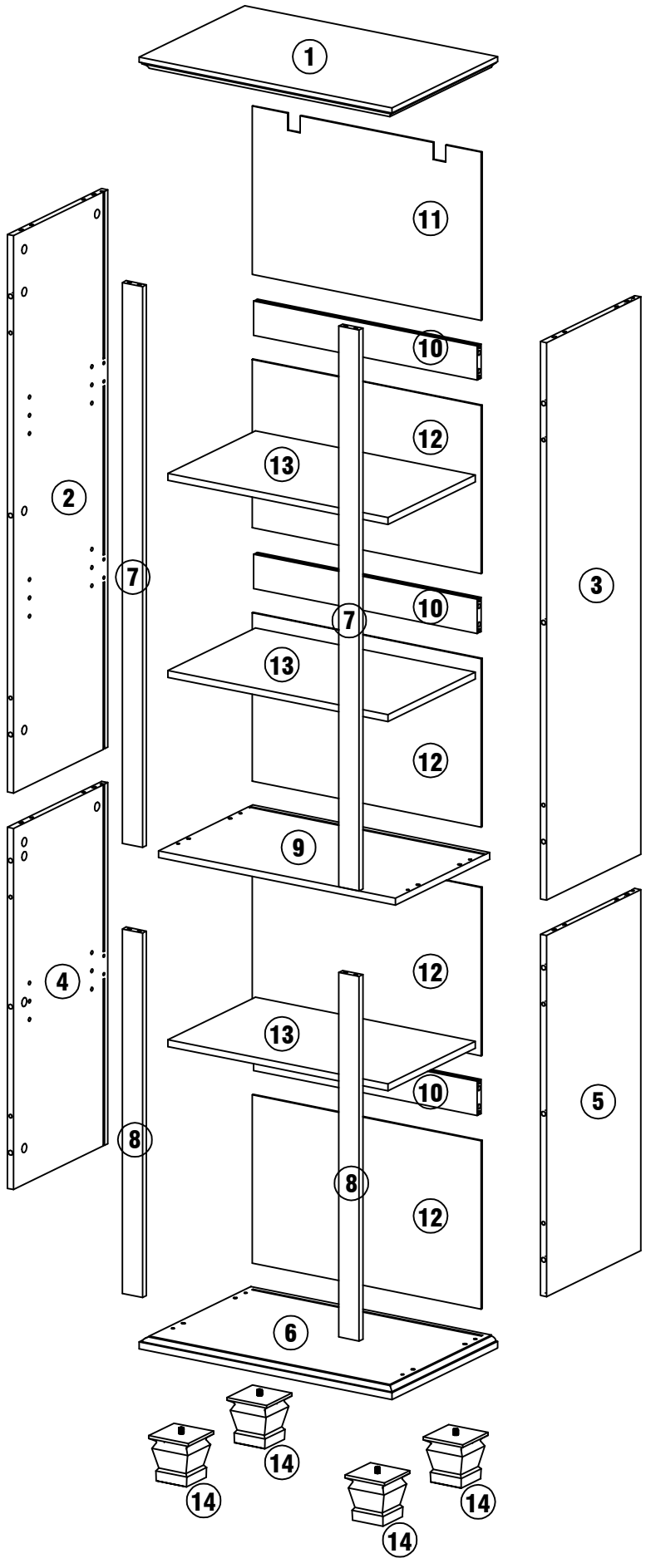

PART LIST

1  1 pc	2 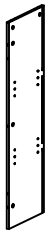 1 pc	3 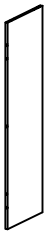 1 pc
4 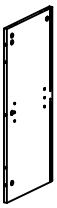 1 pc	5 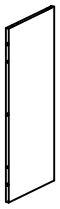 1 pc	6  1 pc
7  2 pcs	8  2 pcs	9  1 pc
10  3 pcs	11 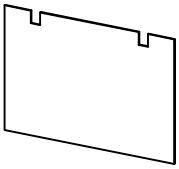 1 pc	12 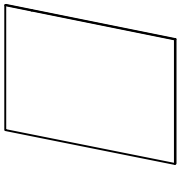 4 pcs
13  3 pcs	14  4 pcs	

HARDWARE LIST

A X28+2  **⌀6X30MM**	**B X32+2** 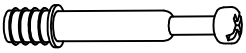 **⌀6X40MM**	**C X32+2**  **⌀15X10MM**
D X14 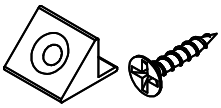 **⌀3X19MM**	**E X8+1** 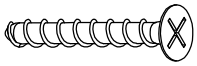 **⌀4X50MM**	**F X12+1** 
G X2 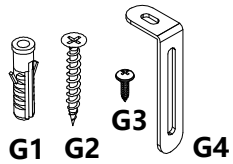 G1 G2 G3 G4	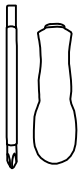	

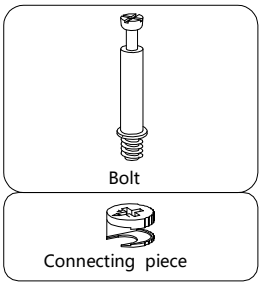

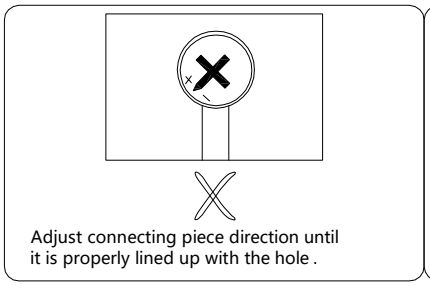

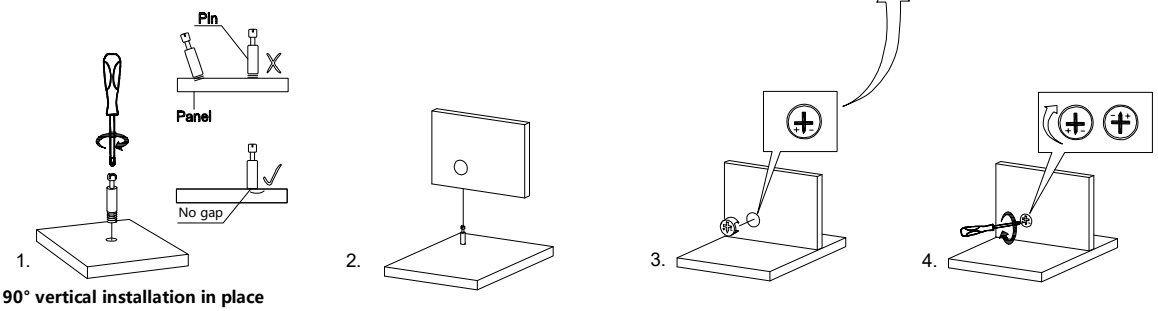

90° vertical installation in place

STEP 1

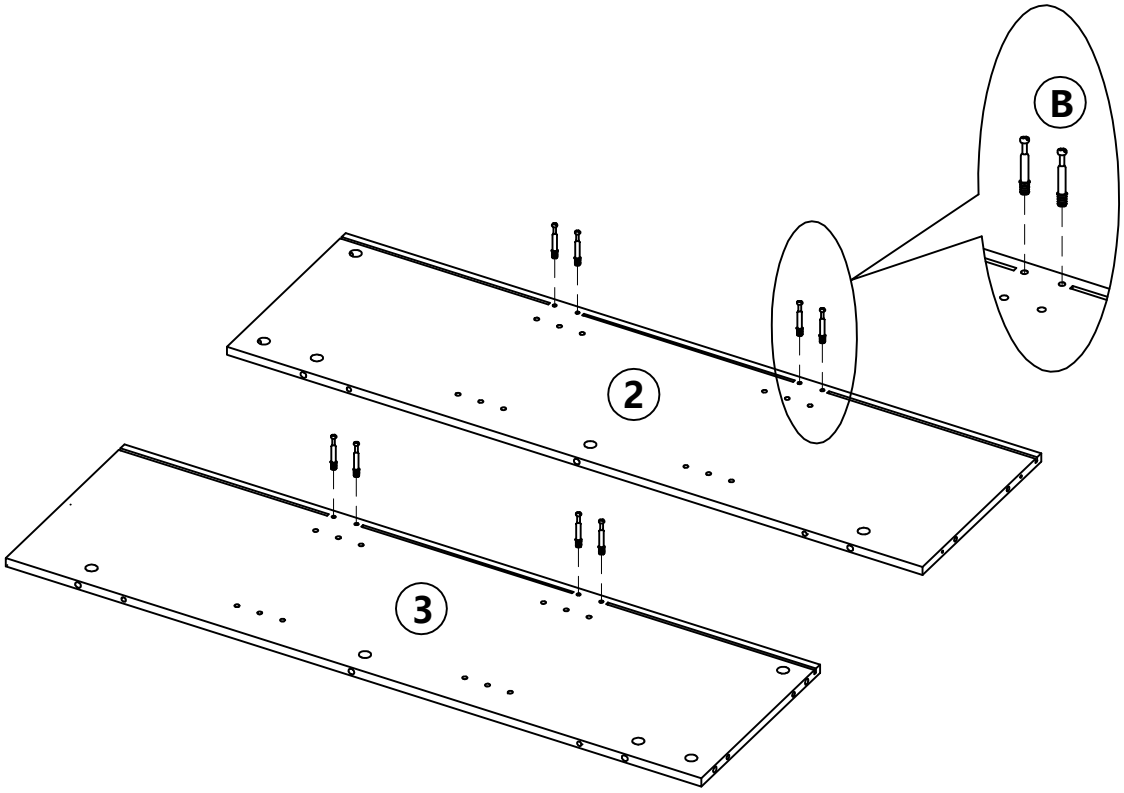

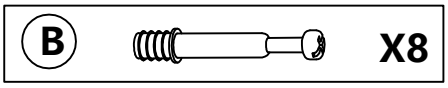

STEP 2

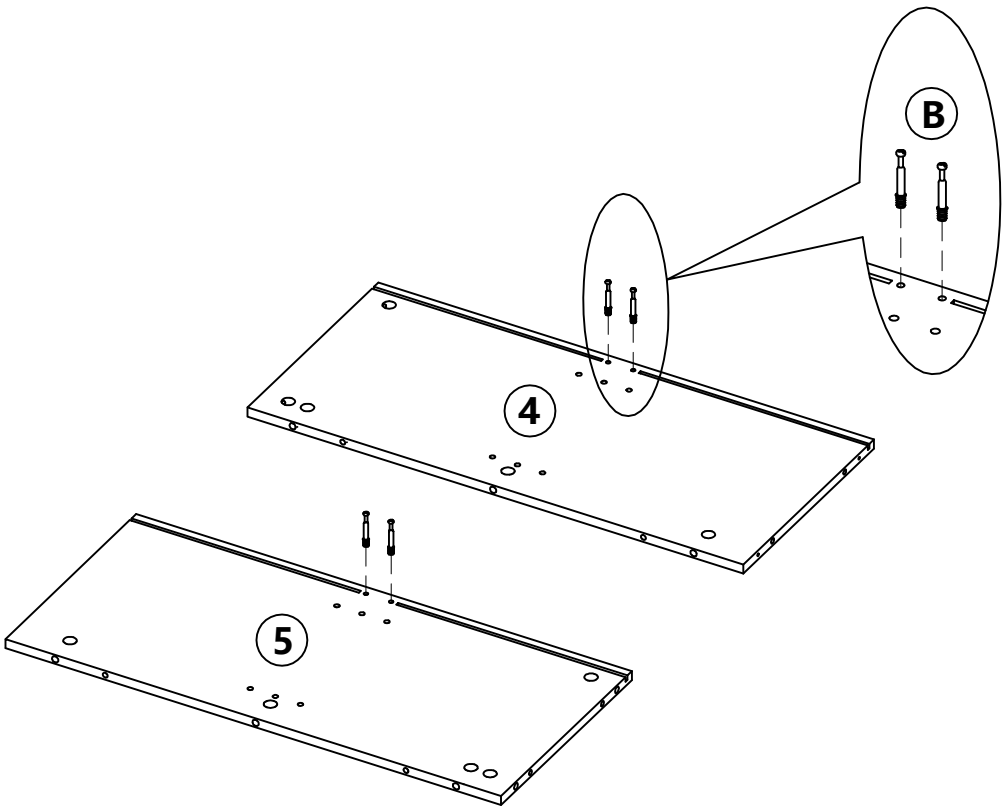

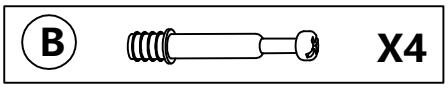

STEP 3

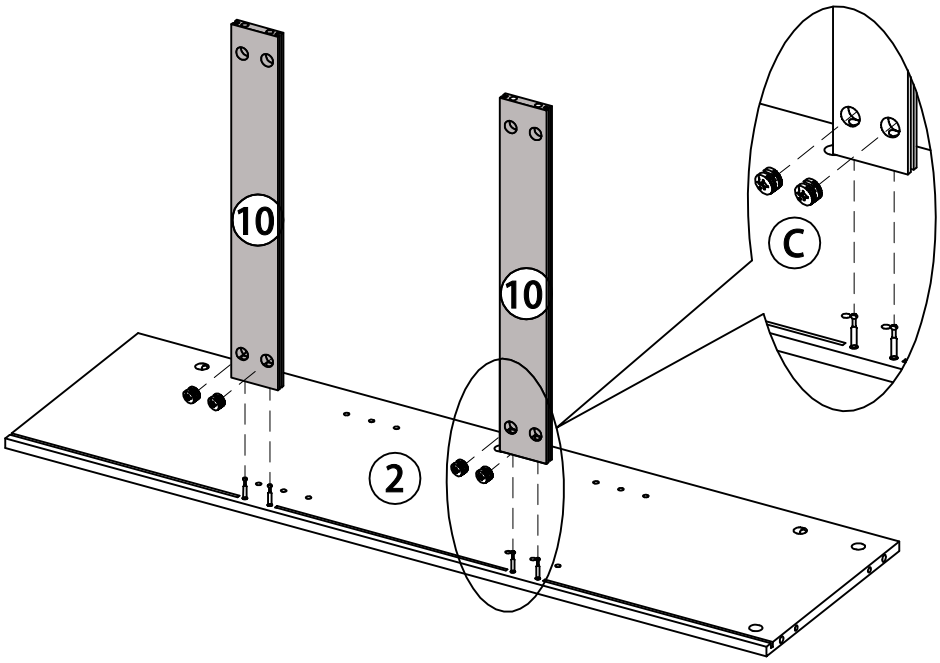

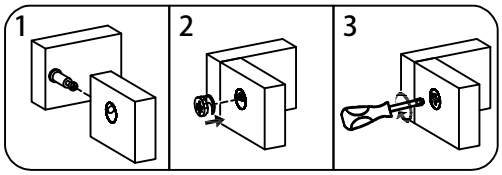

C		X4

STEP 4

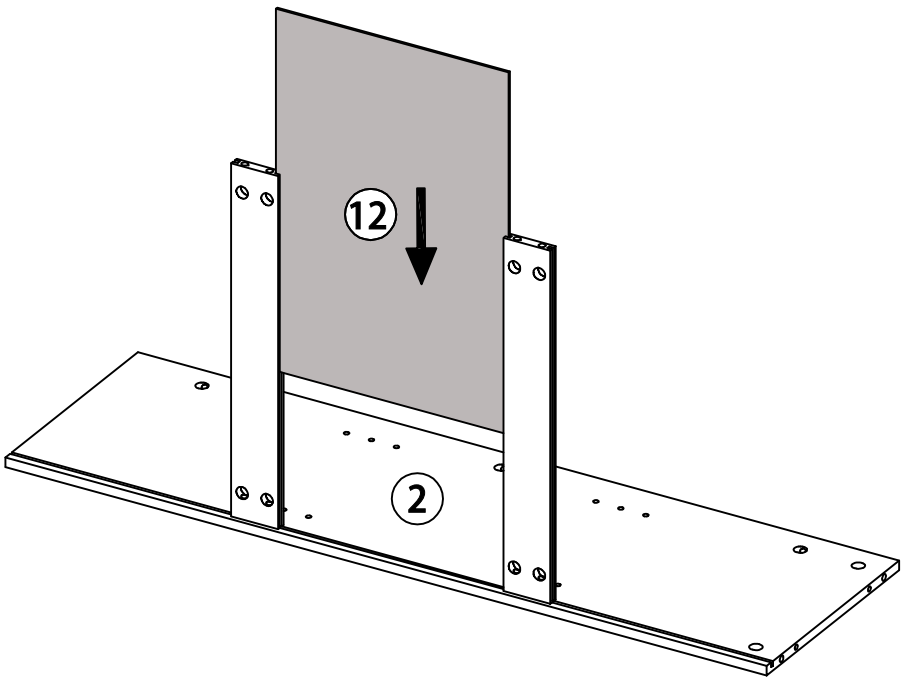

STEP 5

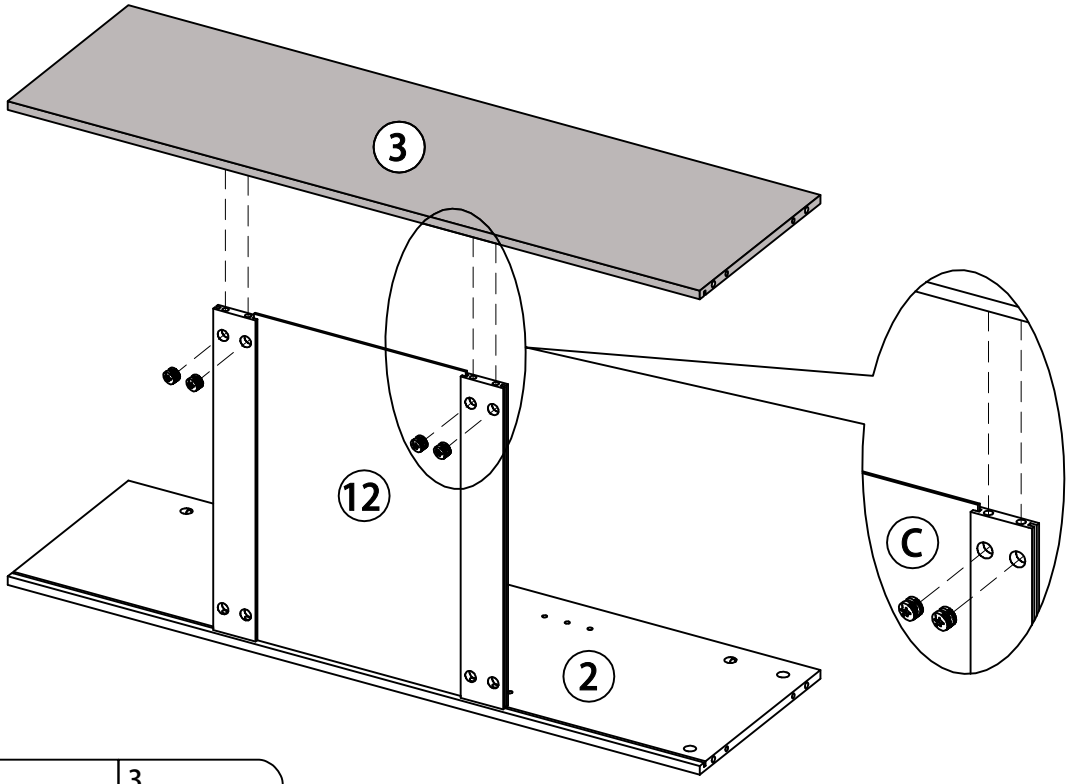

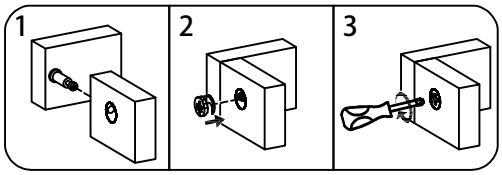

C		X4

STEP 6

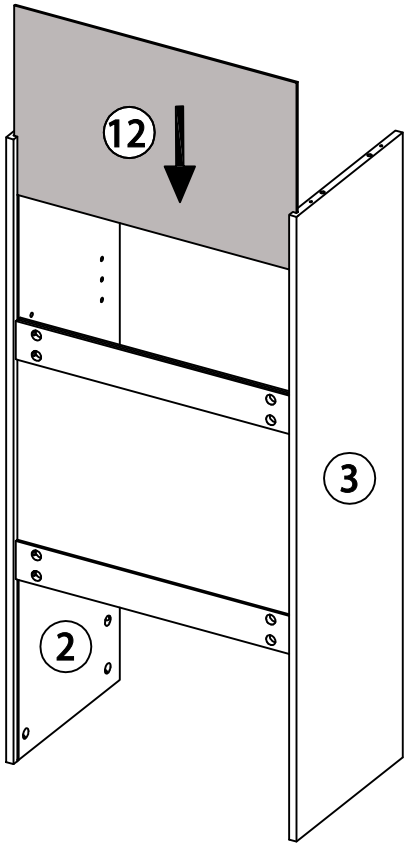

STEP 7

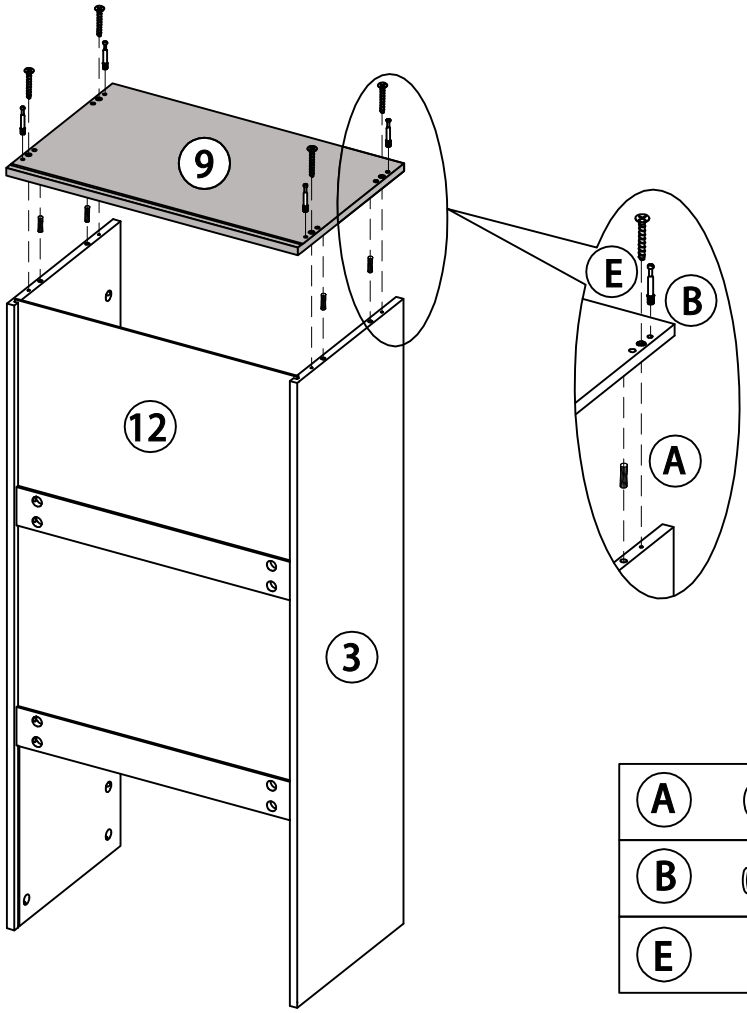

A		X4
B	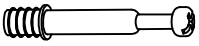	X4
E		X4

STEP 8

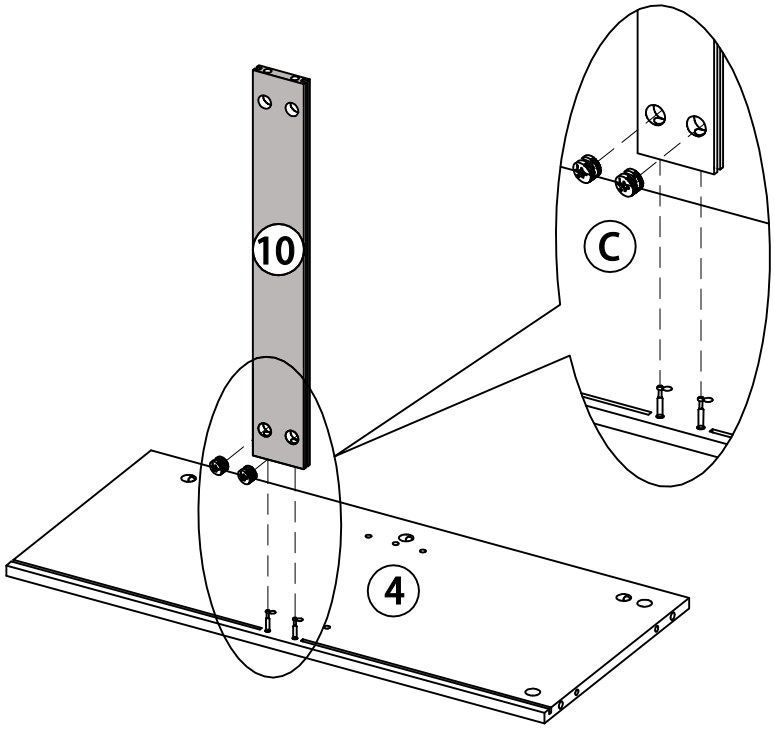

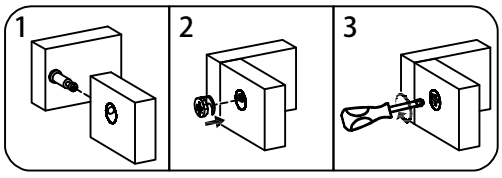

C		X2

STEP 9

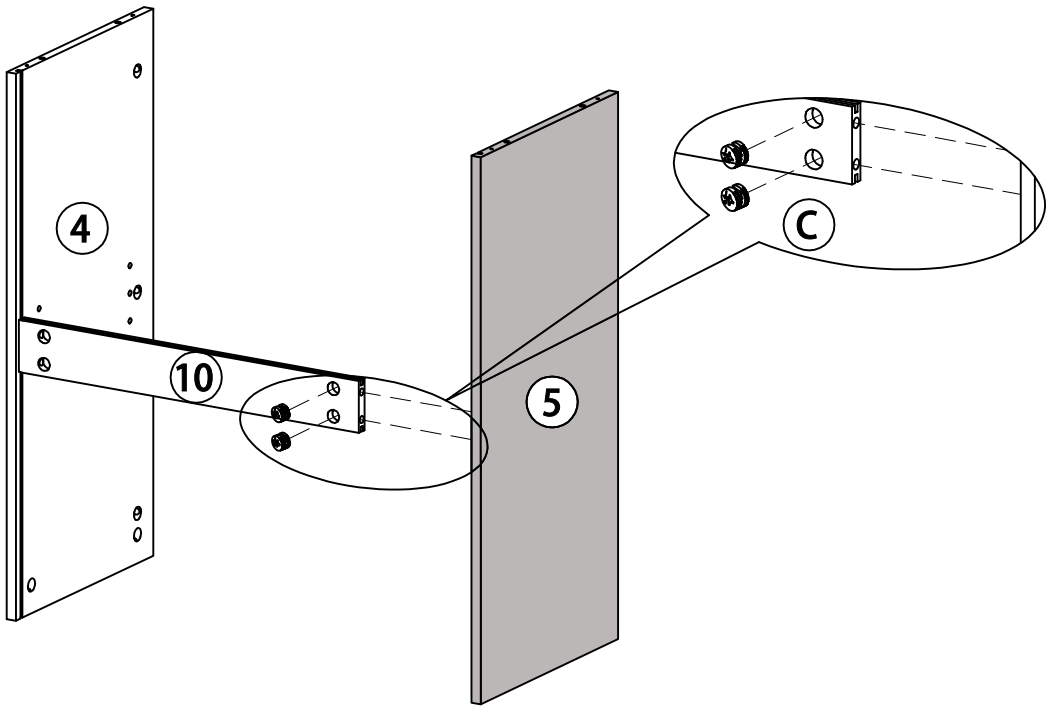

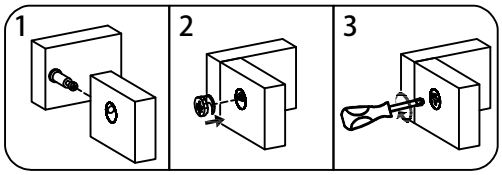

C  X2

STEP 10

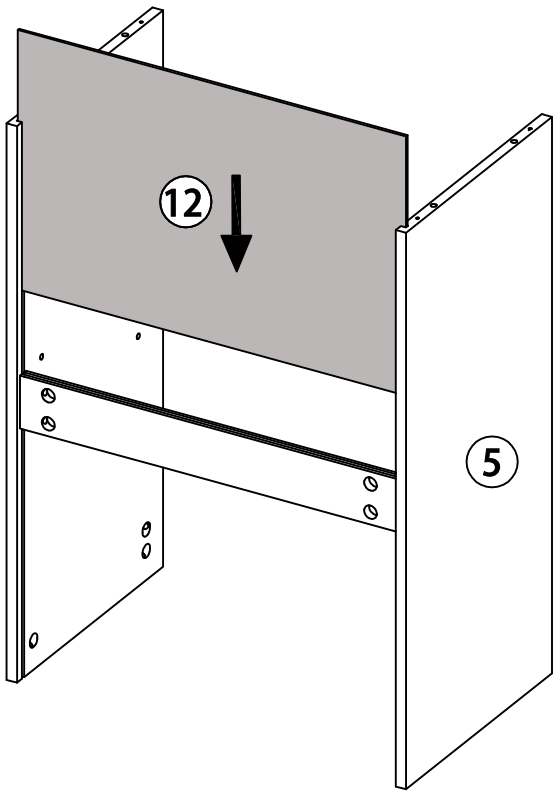

STEP 11

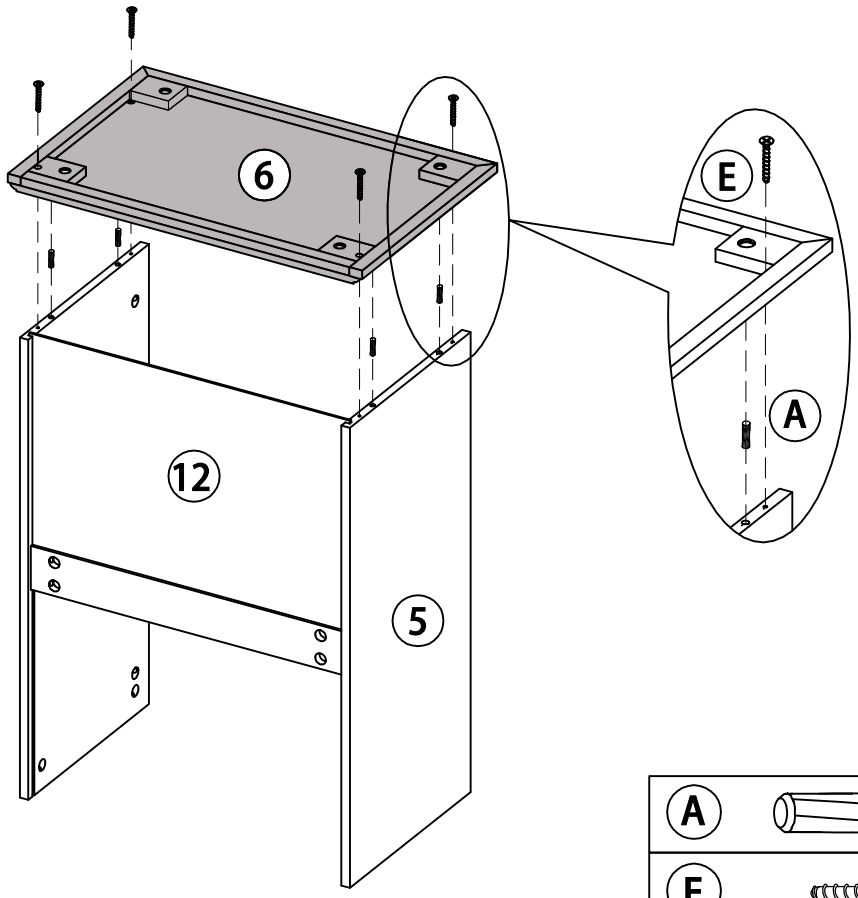

A		X4
E		X4

STEP 12

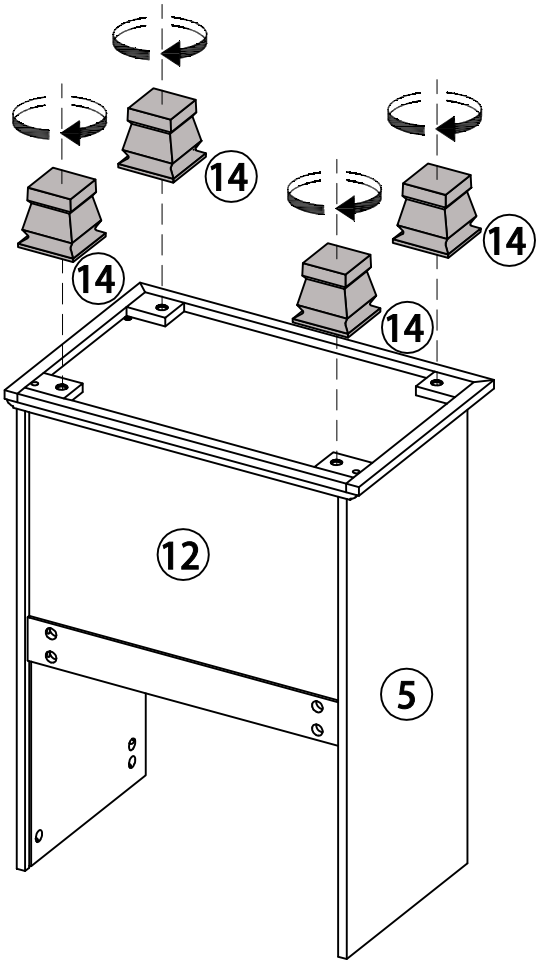

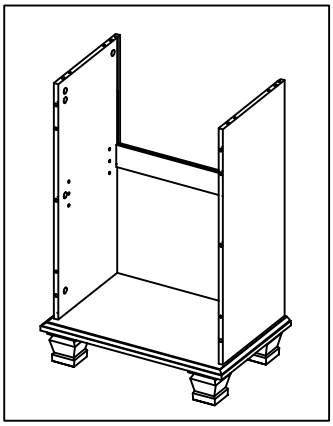

STEP 13

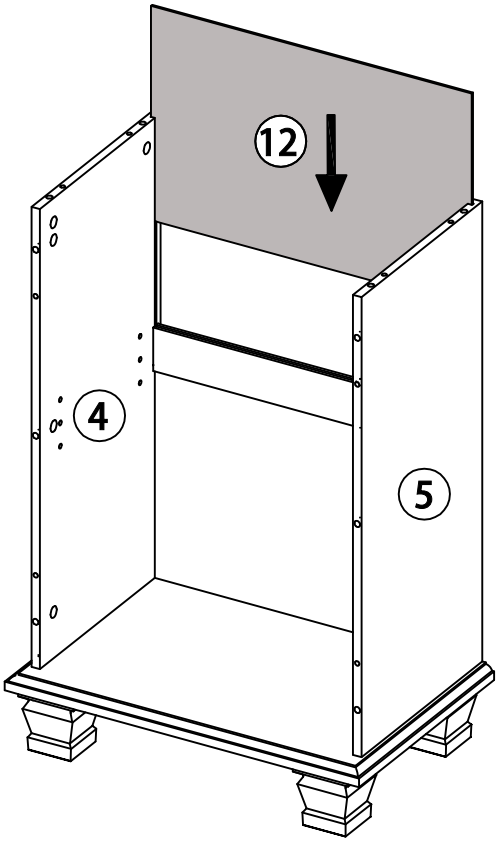

STEP 14

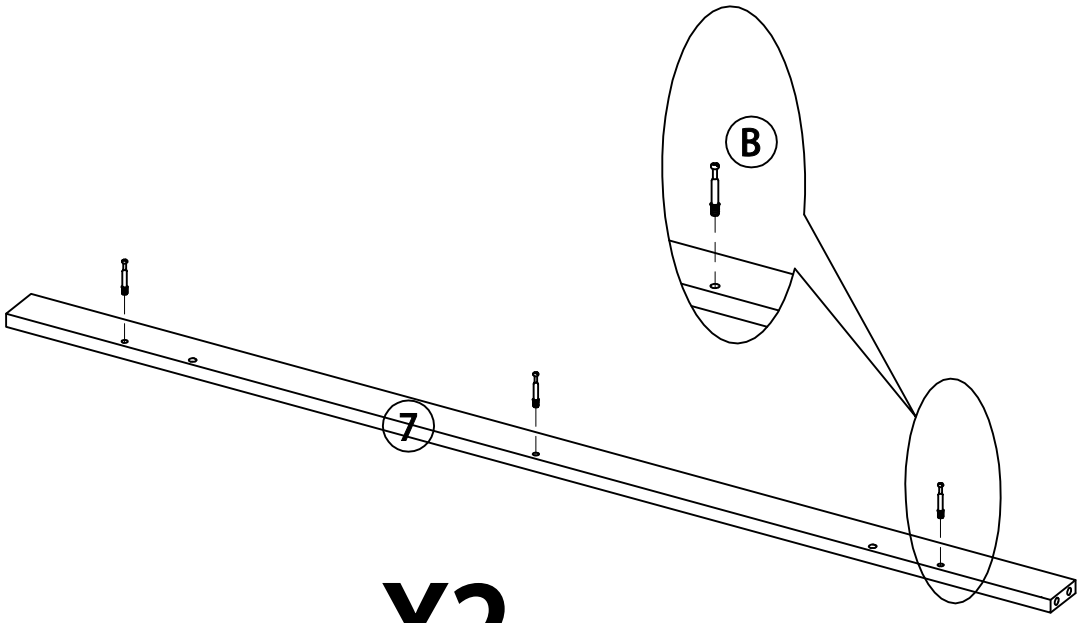

X2

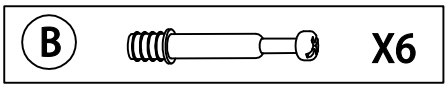

STEP 15

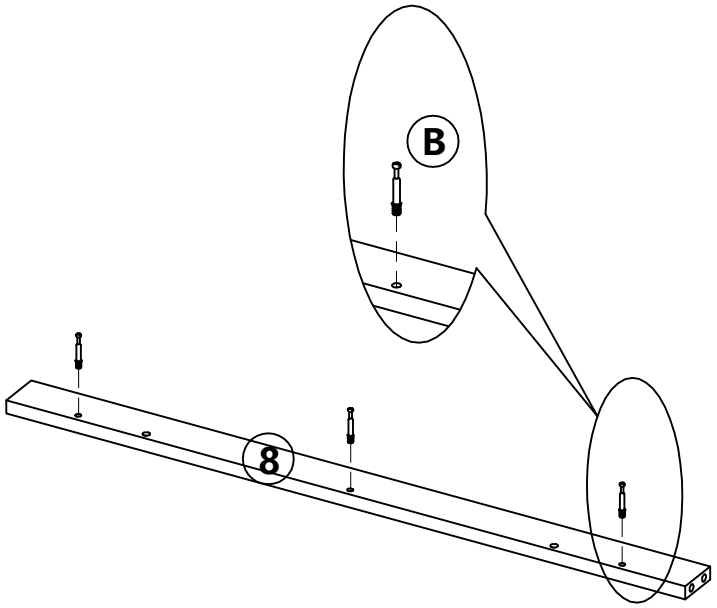

X2

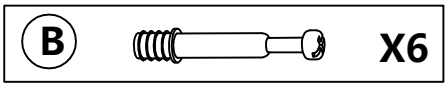

STEP 16

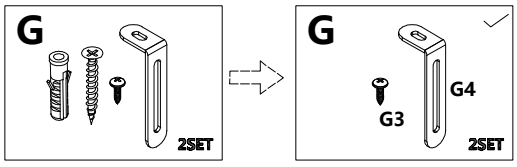

Note: Put the anti-tip device G4 on the top panel, near the back side, and fix it with a screw G3.

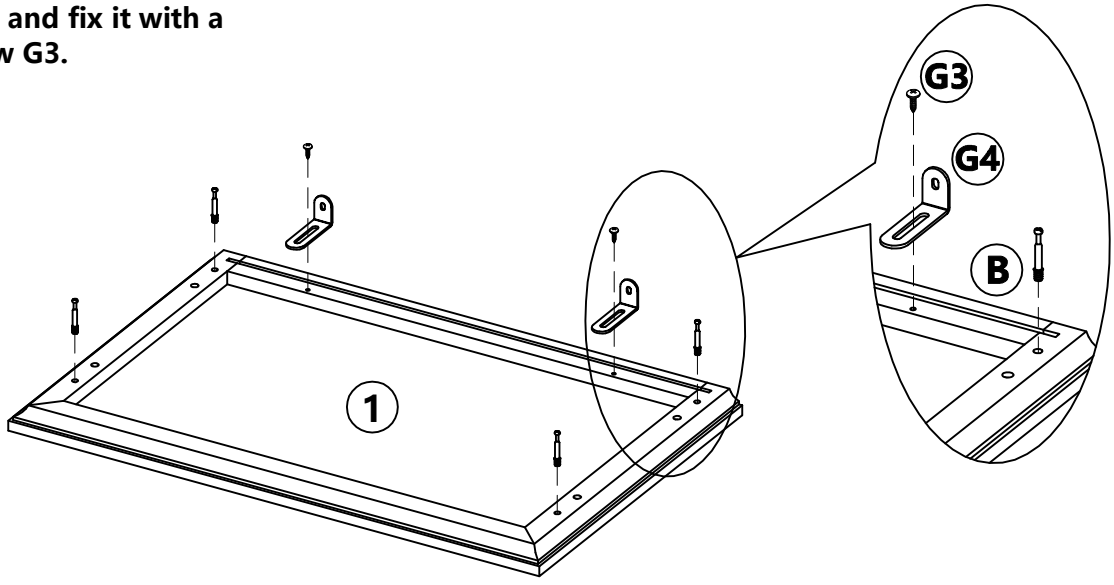

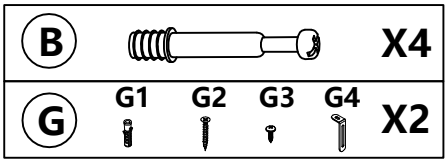

STEP 17

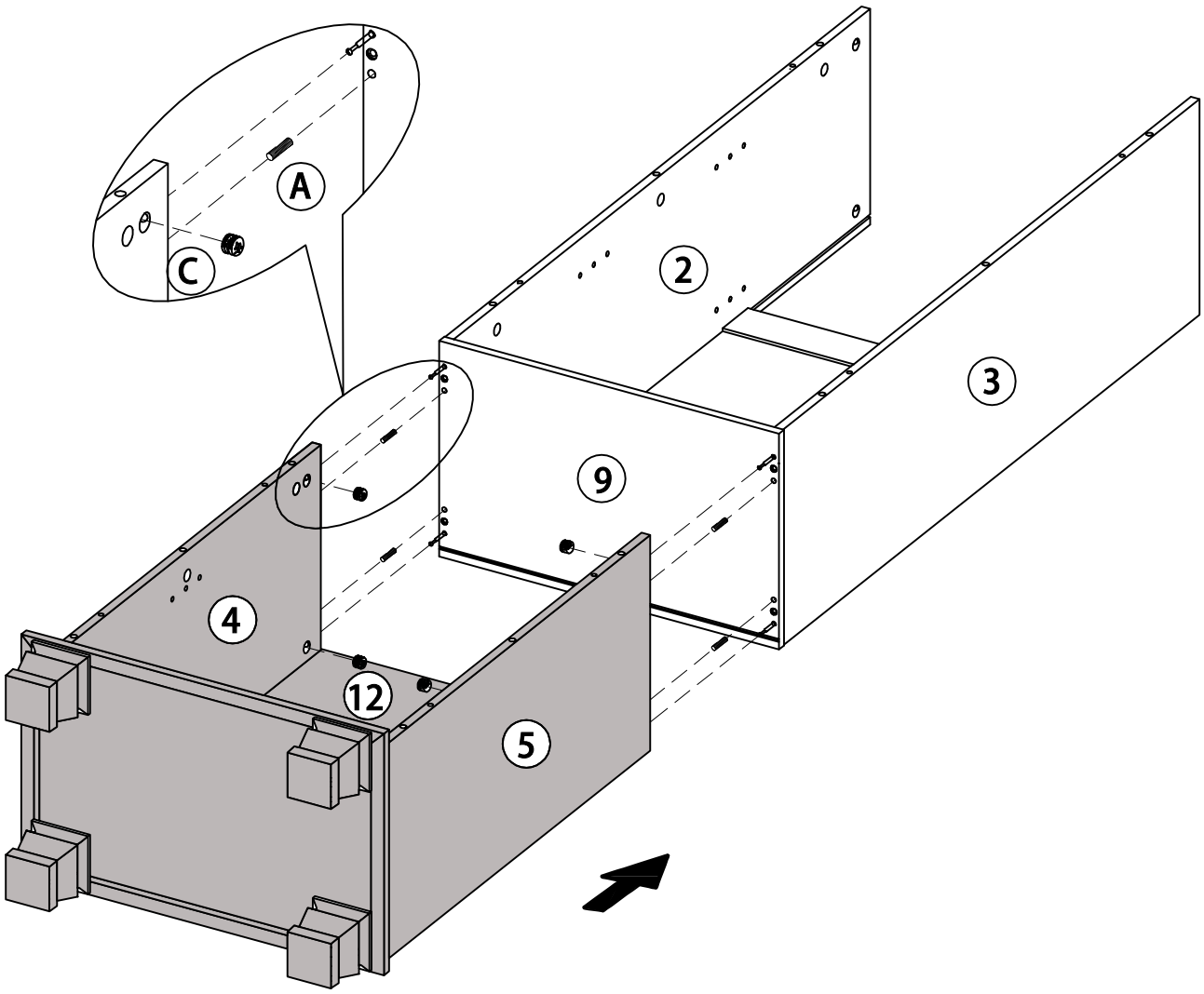

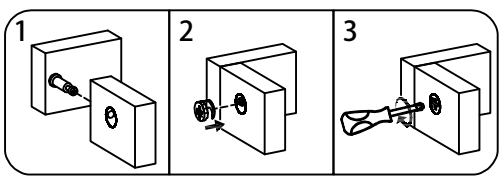

A	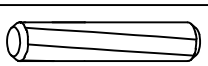	X4
C		X4

STEP 18

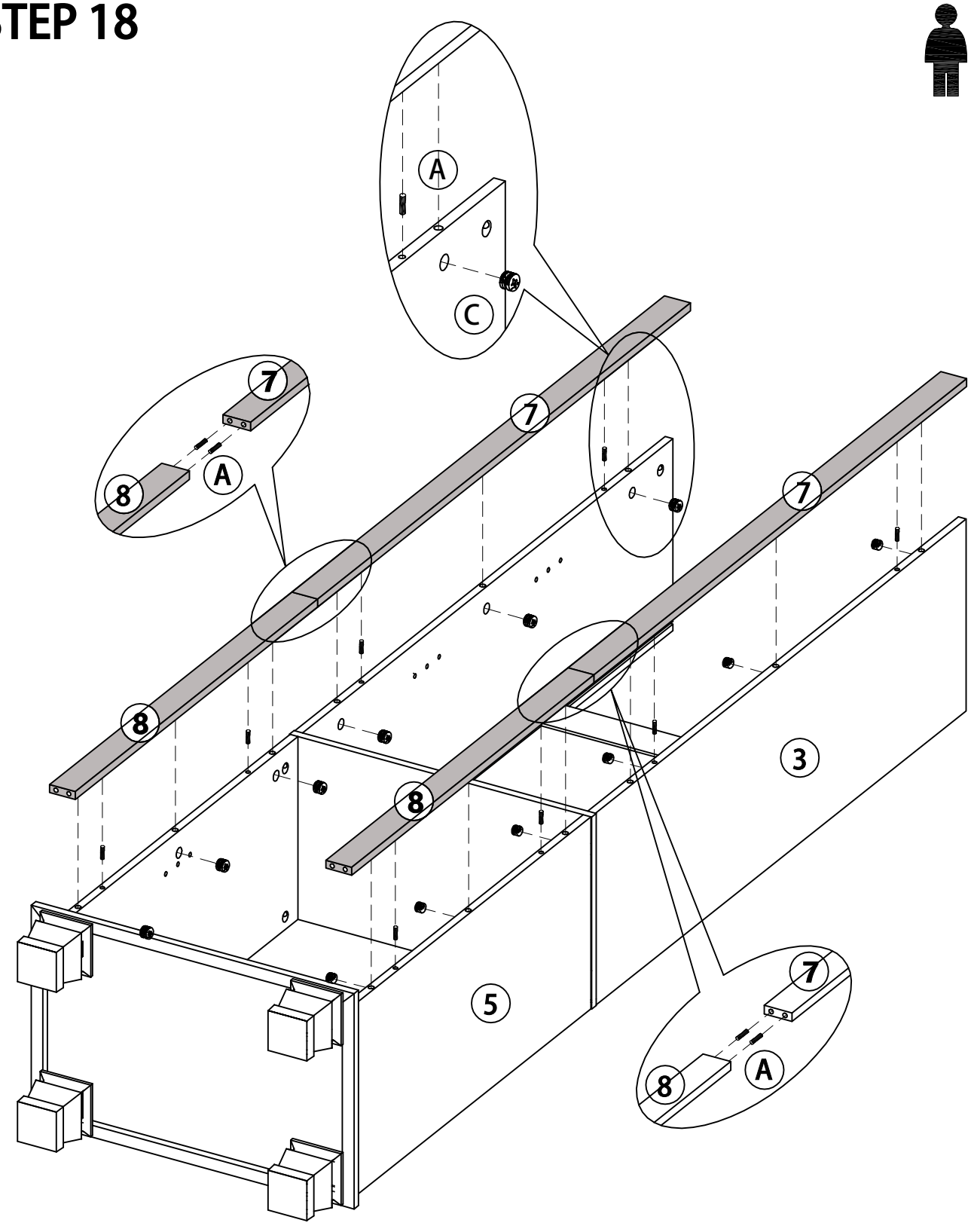

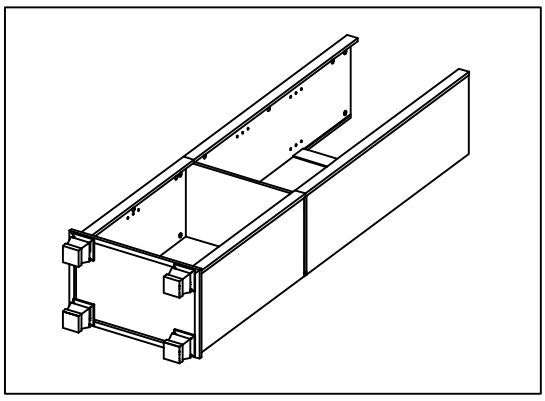

A		X12
C		X12

STEP 19

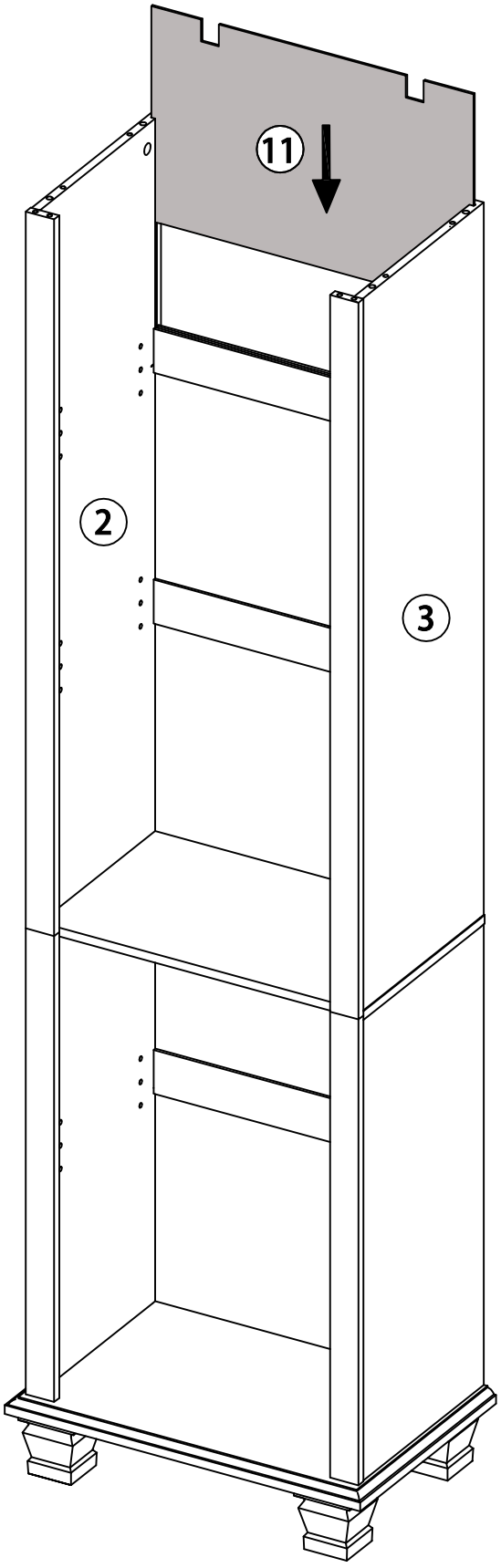

STEP 20

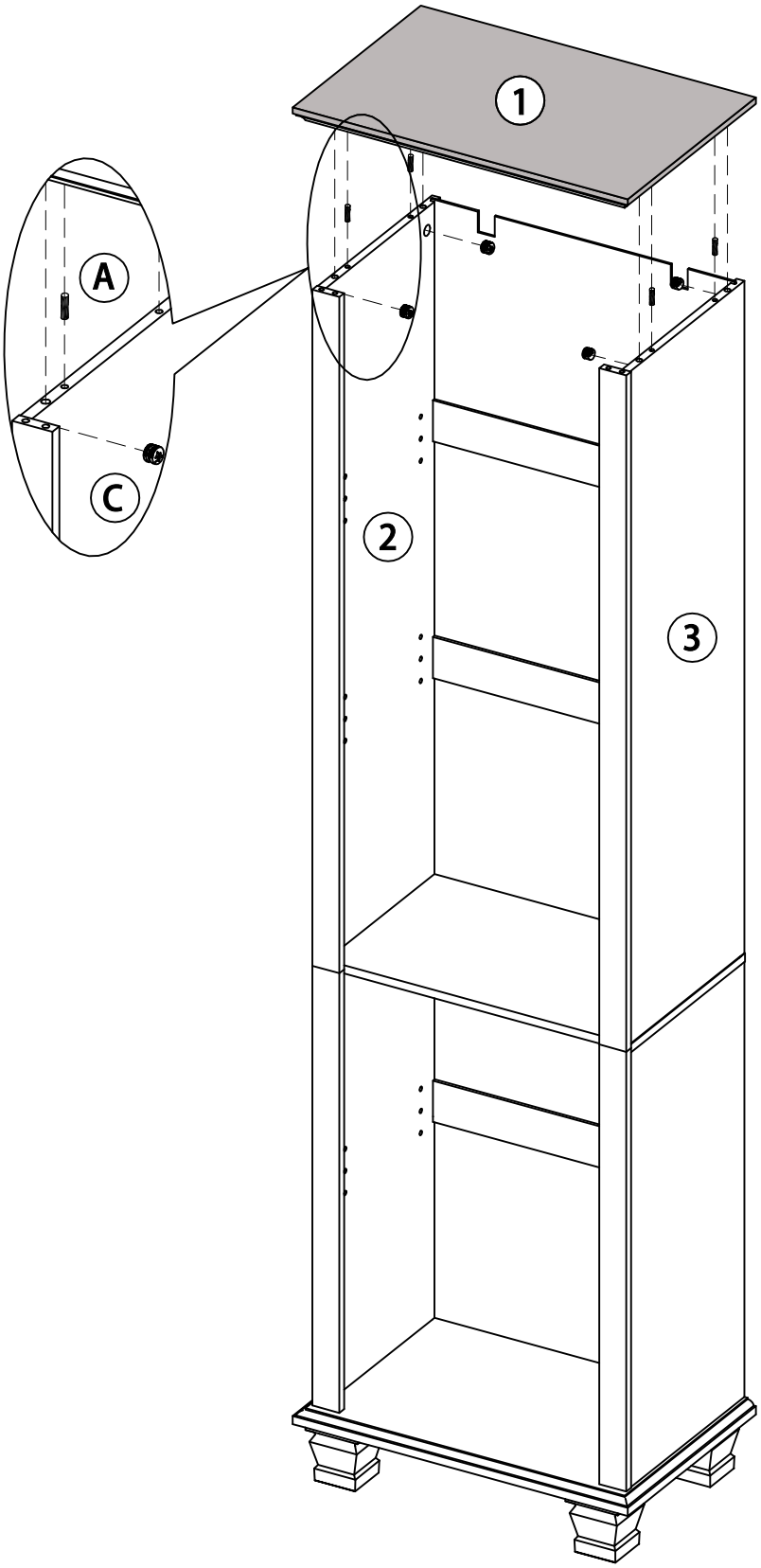

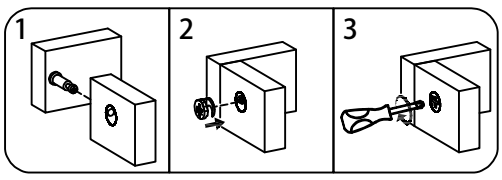

A	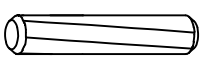	X4
C		X4

STEP 21

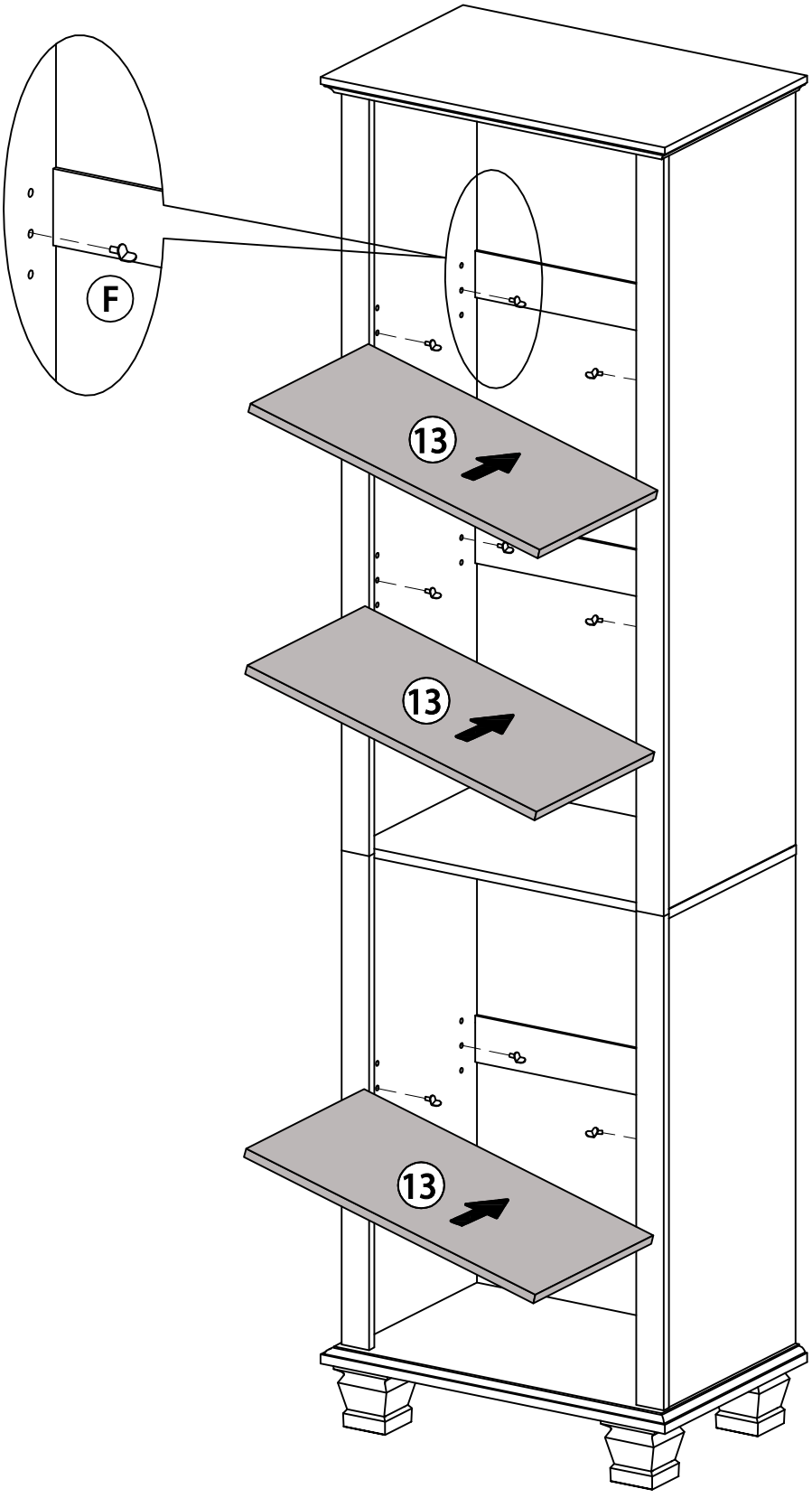

F		X12

STEP 22

Please be sure to install the mending wedges to prevent the product from becoming unstable or wobbling.

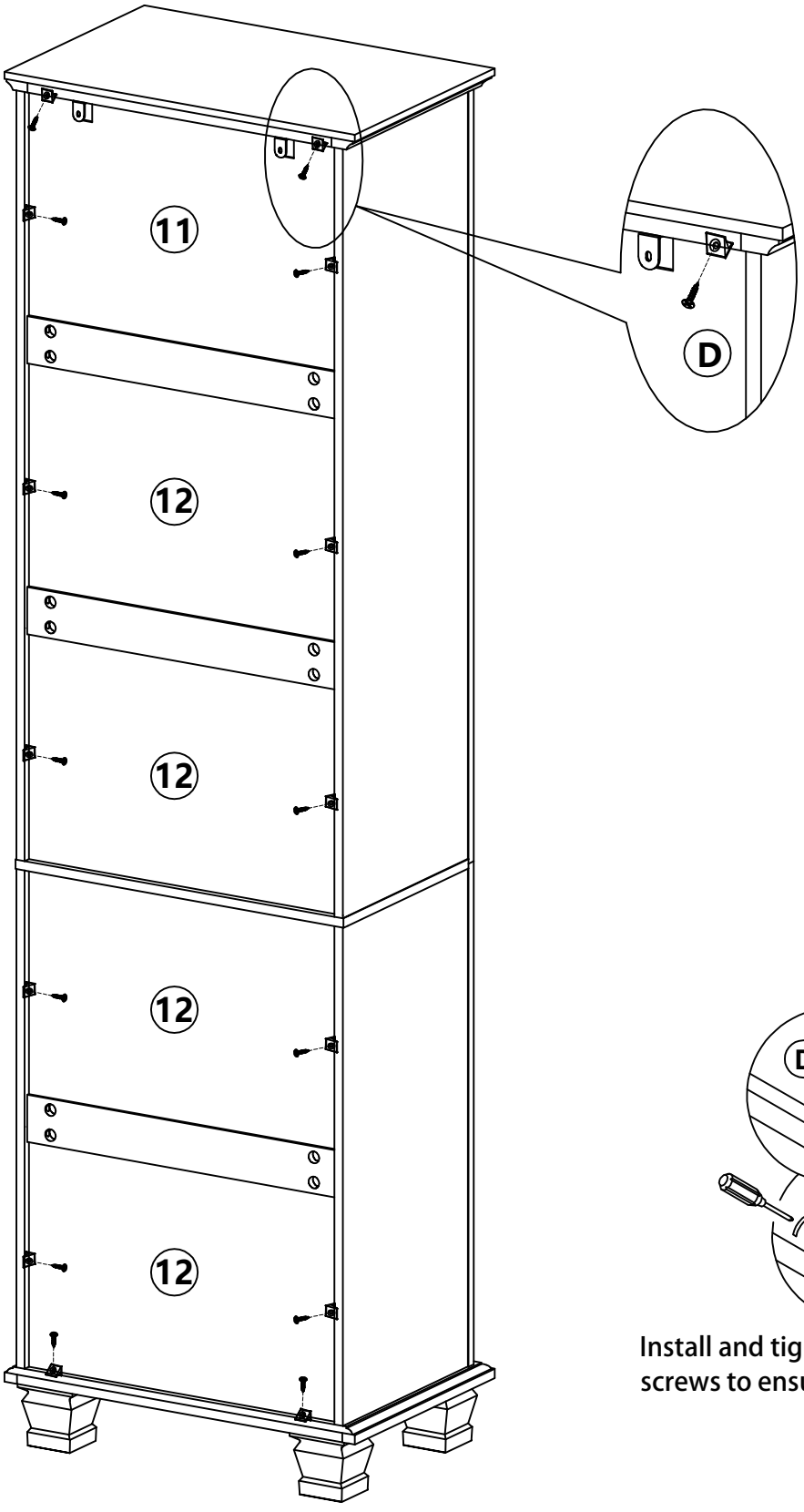

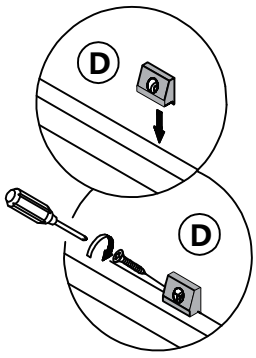

Install and tighten backplate screws to ensure stability

D X14

STEP 23

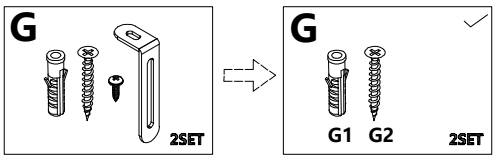

Drill a hole in the wall , then hammer the G1 into the wall with a hammer

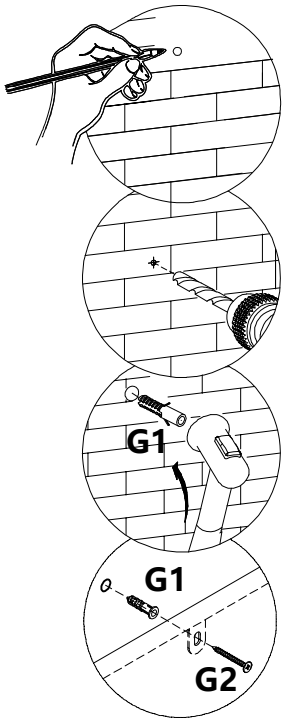

Note: Follow step
Link G4 and G1 with a G2 using a screwdriver,and assembly it tightly.

WALL

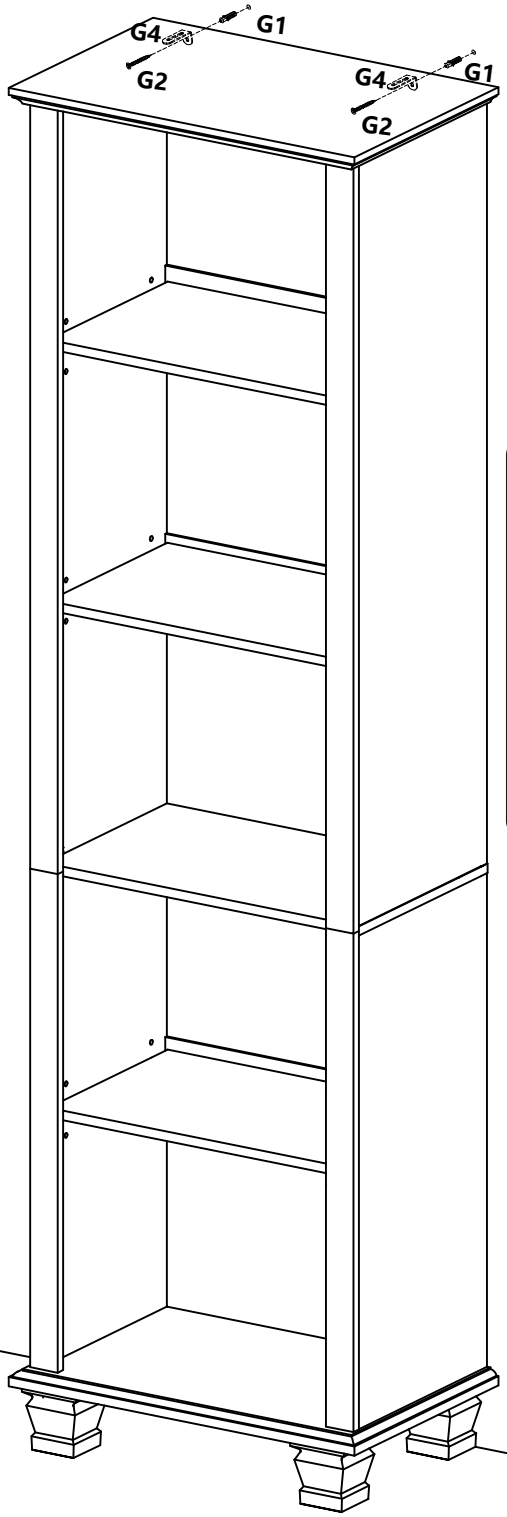

⚠ WARNING

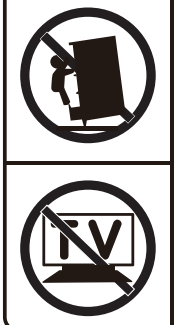

Children have died from furniture tipover. To reduce the risk of furniture tipover:

- ALWAYS install anti-tip device provided.
- NEVER put a TV on this product.
- NEVER allow children to stand, climb or hang on any drawers, doors, or shelves.
- NEVER open more than one drawer at a time.
- Place heaviest items in the lowest drawers.

his is a permanent label.
Do not remove!

