DREAMS IDEA

Instruction Manual



DREAMS IDEA

NO.CH0067

ABOUT US

DREAMSIDEA IS A ONE-STOP HOME

FURNISHING AND SERVICE COMPANY BASED IN USA.

WE ARE DEDICATED TO BRINGING YOUR DREAM HOME TO LIFE.

OUR SERVICES COVER FROM DESIGN, PRODUCTION,

DIRECT SELL, STORAGE, AND TRANSPORTATION.

IF REALITY IS THE NEAR SHORE

AND IDEALISM THE FAR SHORE,

DREAMSIDEA

AS THE FERRY BETWEEN THEM,

EAGER TO ACCOMPANY YOU ON A JOURNEY

TO YOUR IDEAL HOME.

ITEM NO.CH0067

WARRANTY

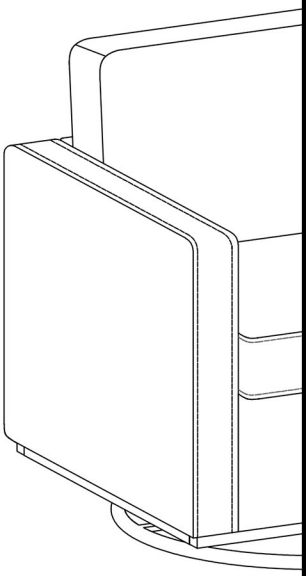

We strive to offer high quality product and we also try our best to satisfy each customer that order from us, no matter on products or services as needed. Each customer receives a record of their order, such as the order number or item receipt. For any items that are out of warranty period, you may still be able to purchase the replacement parts from our company if they are available.

Are you having difficulty
with assembly? Missing parts?
Please contact us : info@firstopintl.com
Tel:(562)-781-3327
send an email with your order No. to us
For return, please check the return policy with the retailer or platforms you bought from.
Appreciate your purchasing from us.
Pop up your life by our furniture !

MAINTAINANCE AND WARNING

Please read the manual thoroughly before you start installing.

Please keep the product away from sharp object.

Packaging and small parts may have chocking hazard, please keep them away from children and pets.

Please clean the product according to each clean code, check the product description for more information.

Please keep the product away from fire.

If you have any other questions, please contact us, we will be glad to help you out.

If the product is placed under direct sunlight, the pattern or color might fade away overtime.

Check the product periodically to make sure everything is secured and tightened.

Always use proper tools for installation.

Do not jump on the product.









PRDOUCT DESCRIPTION

Upholstered in premium chenille fabric, this armchair combines a silky touch with a warm, inviting look while being easy to clean and maintain.

A wide ergonomic backrest paired with a plush cushion ensures superior spinal support, making it ideal for extended seating sessions.

The armrests are set at an optimal height, designed to provide natural comfort for the arms without straining shoulders.

The seat features a layered build of foam sponge, resilient synthetic fibers, and an integrated spring package, offering balanced softness and bounce.

A sturdy metal swivel base delivers effortless 360-degree rotation, while the streamlined assembly process and minimalist silhouette allow seamless integration into modern or traditional interiors.

EXPLODED VIEW

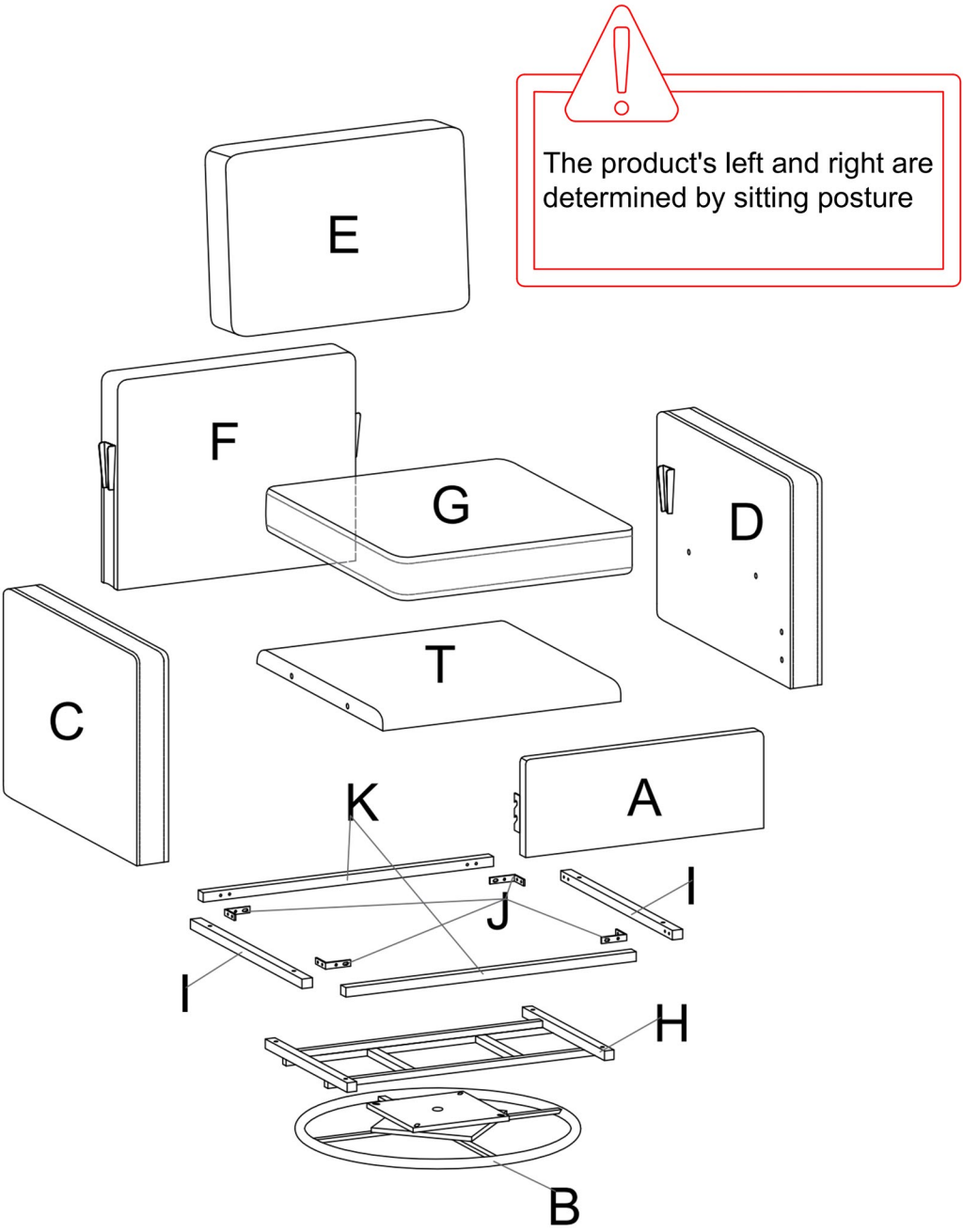

PARTS

A*1



Front panel

B*1

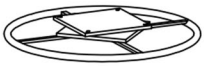

Swive base

C*1

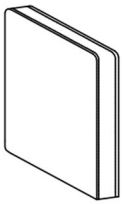

Right arm

D*1



Left arm

E*1

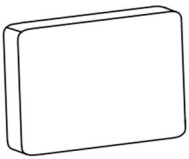

Back cushion

F*1



Backrest

G*1



Seat cushion

H*1

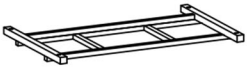

Connecting frame

K*2

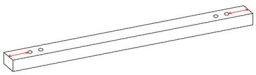

Wooden Bar

I*2

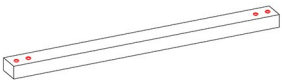

Wooden Bar

J*4



L-shaped connectors

T*1



Seat frame

HARDWARE

TOOL LIST

NOTE: Designated with (★) We provide additional spare parts in the hardware package

①*20



★M6*16mm Bolt

②*4

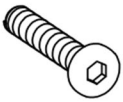

★M6*30mm Bolt

③*12

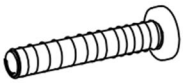

★M6*60mm Bolt

④*1

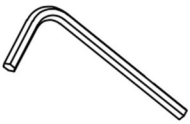

Allen key

Please make sure all hardware&packing material fitting the list. Especially some small accessories may be missing during transportation. Please contact us if you have any question.

step 1---Cut open the plastic air compression bags

Cut the plastic air compression bags, and take out cushions (G) and (E). Place them on the side for recover to their original shape, the whole process might take up to 48 hours, you may gently slap on them to speed up the process.

Please exercise caution when opening the packaging to avoid injury or damage to the product.

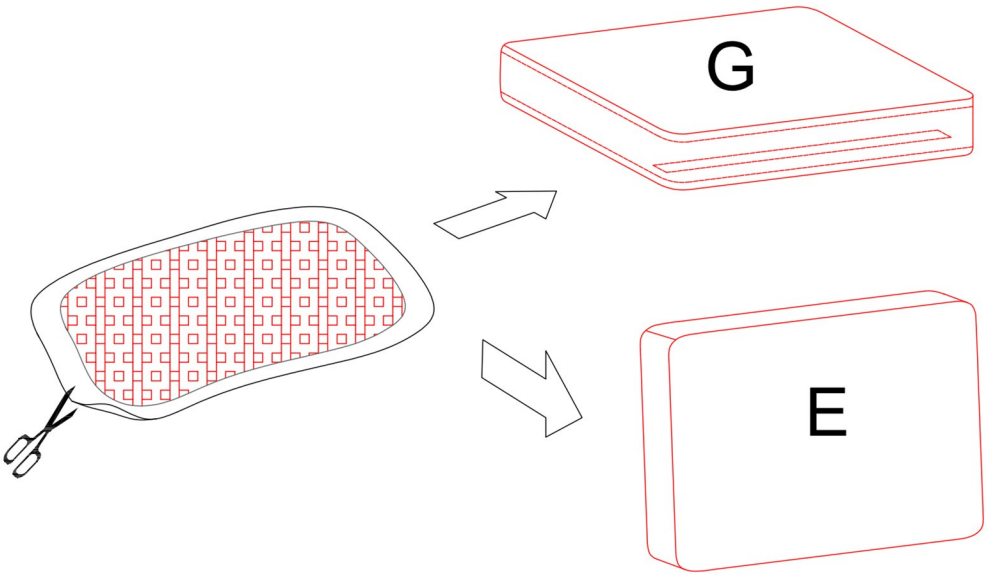

step 2 ---Preassemble screws for Armrest (C&D)

Twist two bolts (2) to the designated holes on each armrest as shown, use the allen wrench (4) provided to tighten both bolts for about 2/3 of their length, do not tighten them completely.

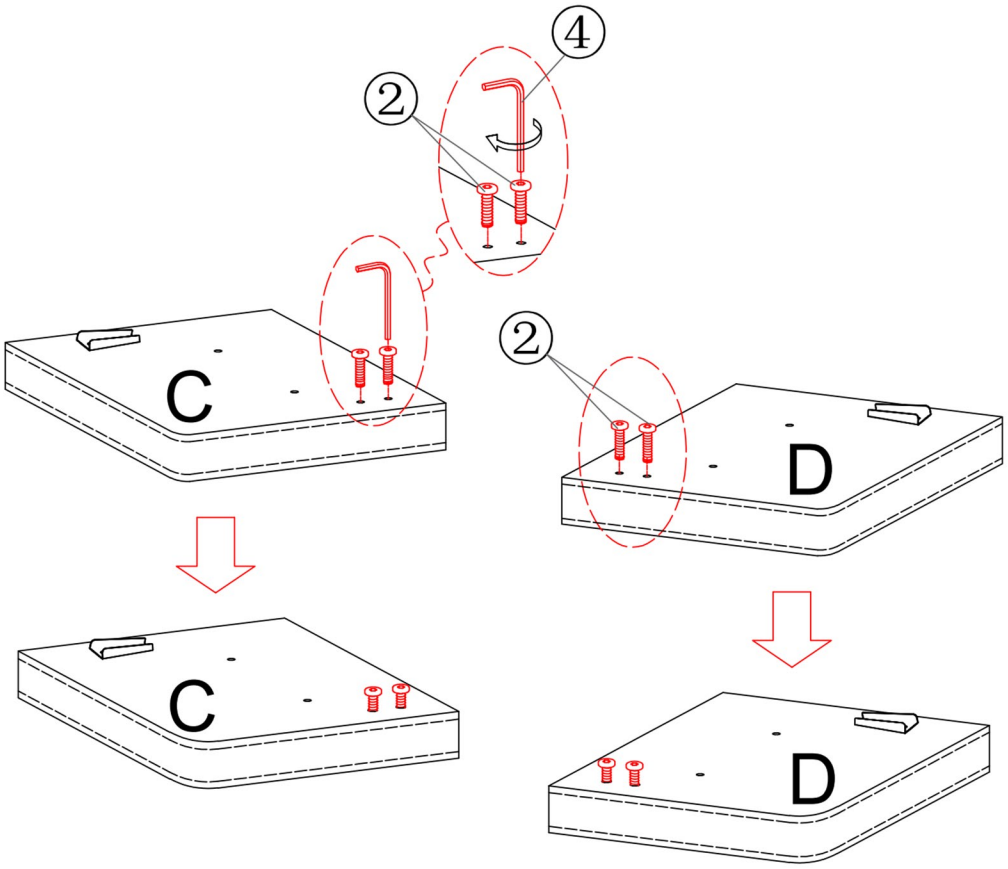

step 3 ---Install the Backrest (F)

To installl the backrest (F), align the connectors on each side of the backrest with the slots on the armrest as shown, make sure both connectors are correctly aligned, then push down the backrest to fix.

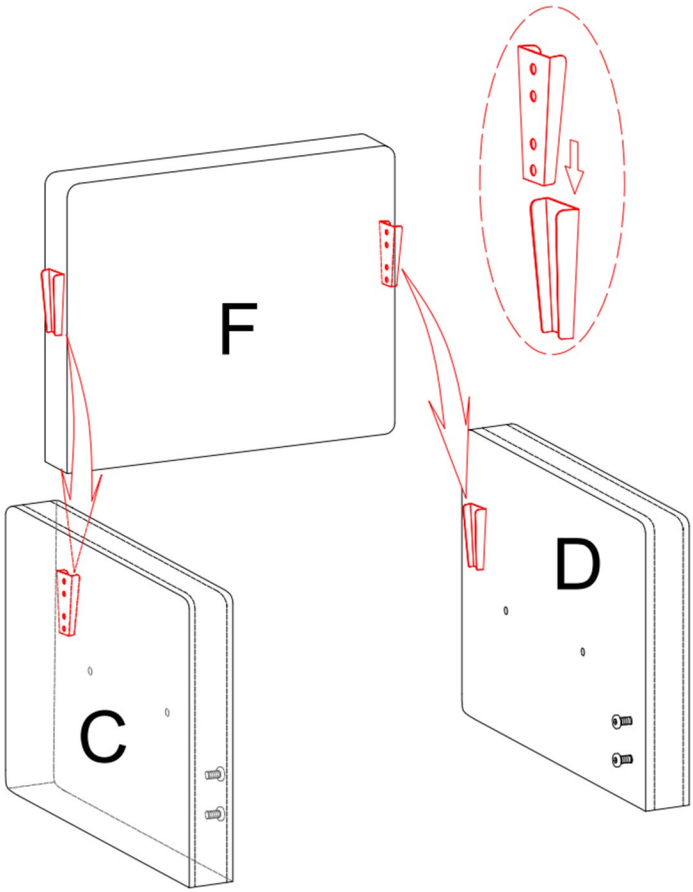

step 4 ---Install the Front panel(A)

To install the front panel (A) to the installed parts, place the front panel (A) at desired place and align the pre-drilled holes on the panel and both armrests as shown. Use the allen wrench provided to tighten all bolts for 2/3 of their length, do not tighten the bolts completely for future assembly.

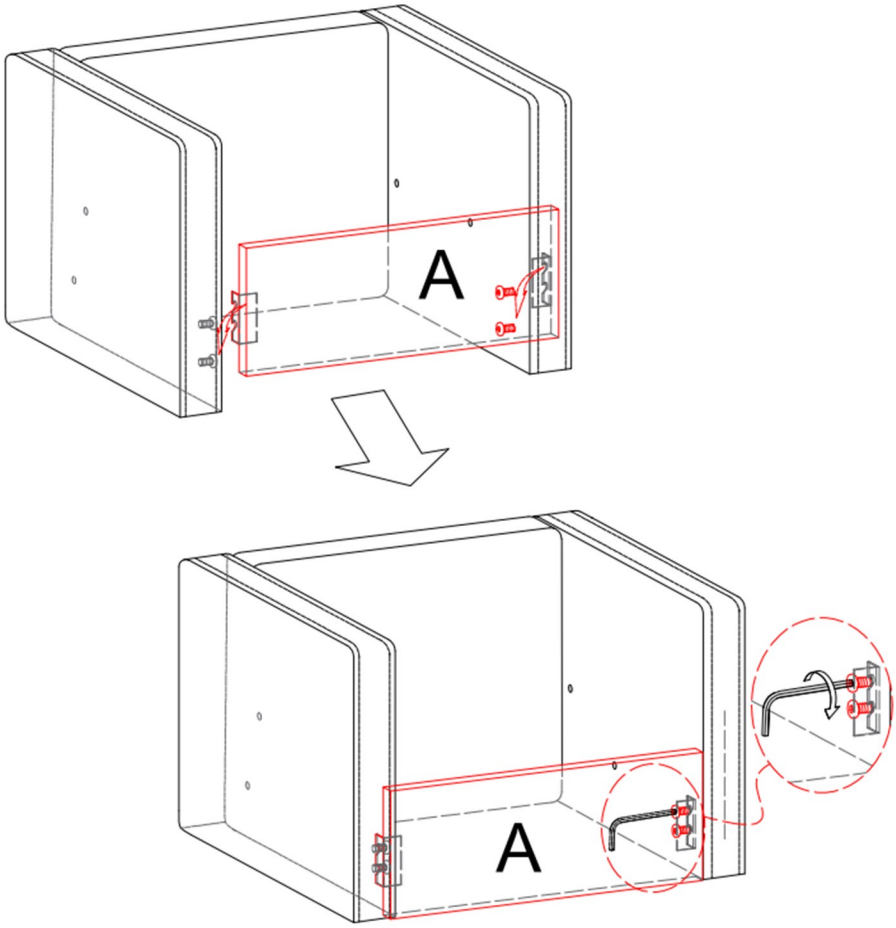

step 5 ---Install the Seat frame (T)

Lift the installed parts up, and place the seat frame (T) inside the installed parts as shown. Align the bolt holes on both sides of the frame to the pre-drilled holes on the armrests, then use the allen wrench (4) provided to tighten all the bolts, including the bolts from previous steps.

Notice:
We suggest tightening the bolts for 30-50% first, make sure the process is correct and bolt holes are aligned, then fully tightening them all.

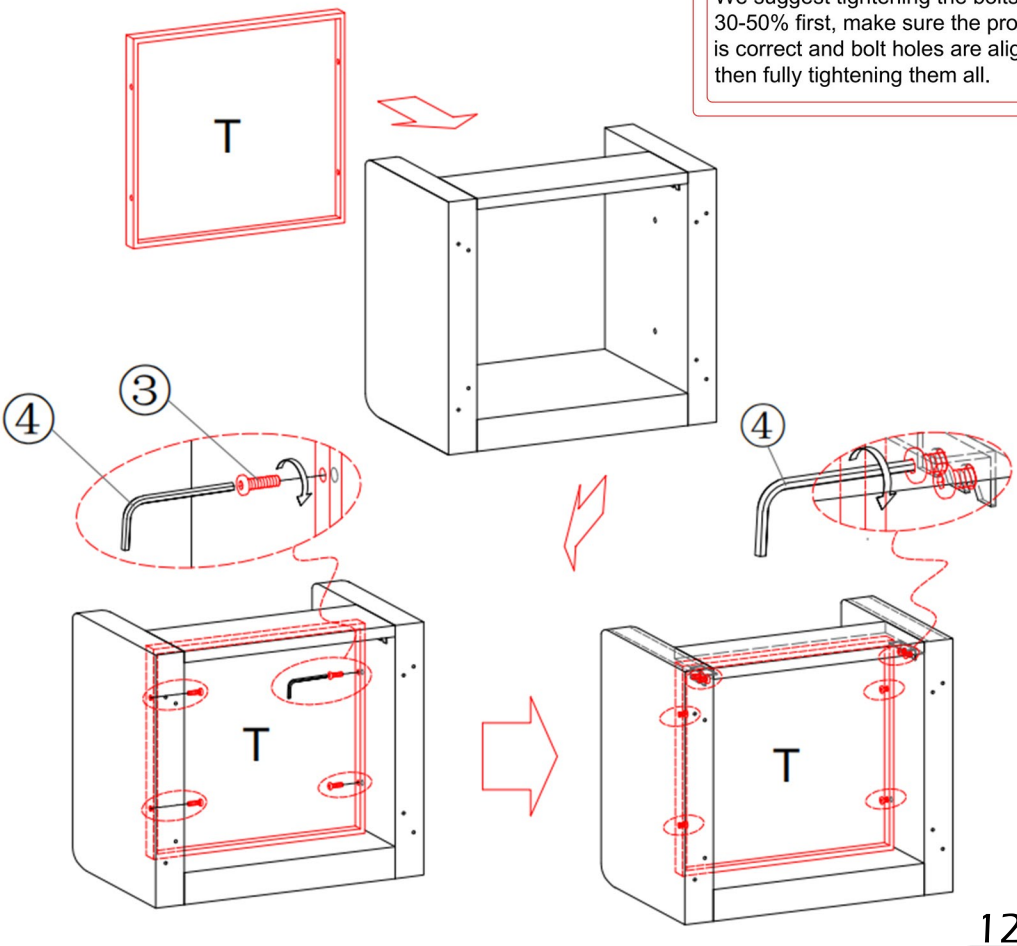

step 6 ---Assemble the wooden frame.

Use the L-shaped connectors (J) to connect the long bars (K) and short bars (I) into a frame as shown, use the allen wench(4) provided to tighten all the bolts.

Notice:
We suggest tightening the bolts for 30-50% first, make sure the process is correct and bolt holes are aligned, then fully tightening them all.

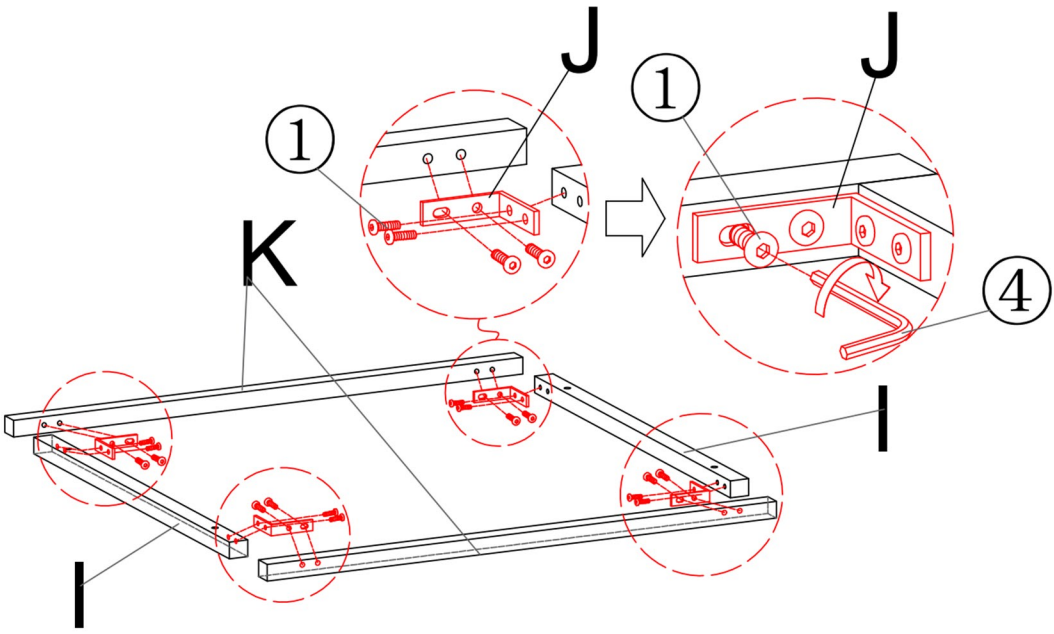

step 7---Install the frame assembled

Place the frame assembled from the previous step to the bottom of the chair as shown, fix it with the bolts. Use the allen wrench provided to tighten all the bolts.

Please make sure the direction of the assembly holes are correctly positioned.

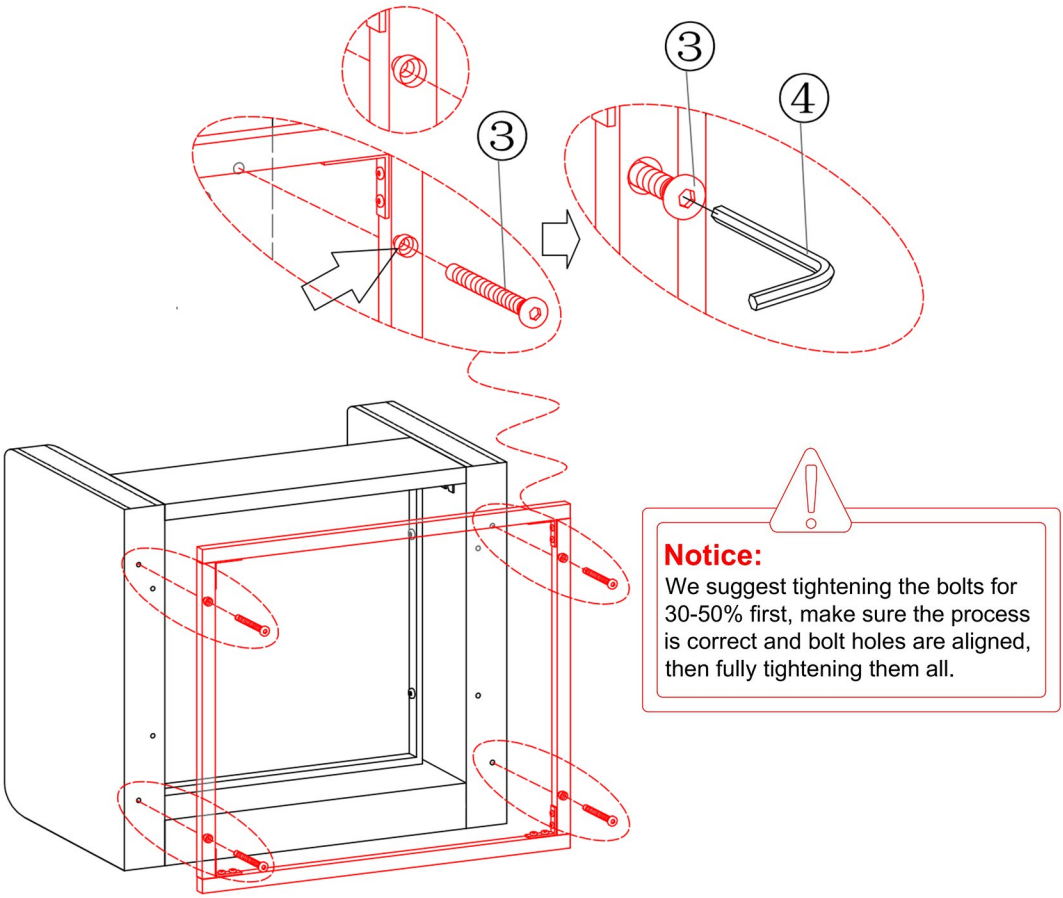

step 8 ---Install the connecting frame (H)

Install the connecting frame (H) to the bottom of the chair as shown, use the allen wrench (4) provided to tighten the bolts. Make sure all the bolt holes are correctly aligned before tightening all the bolts.

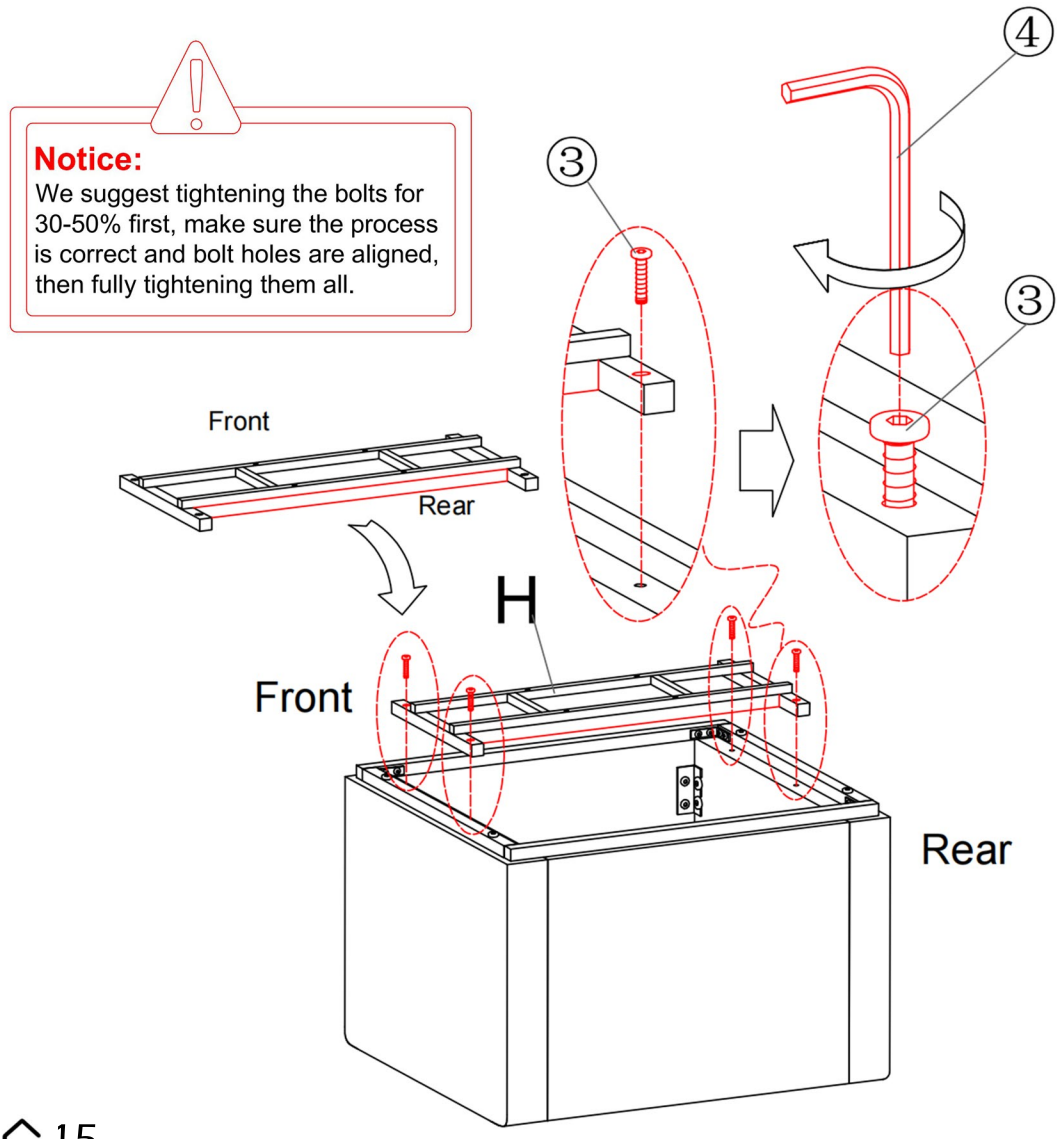

step 9 ---Install the swivel base (B)

Align the mounting holes of the square turntable with the four screw holes on the swivel base. Use the allen wrench provided to tighten the bolts.

Notice:
We suggest tightening the bolts for 30-50% first, make sure the process is correct and bolt holes are aligned, then fully tightening them all.

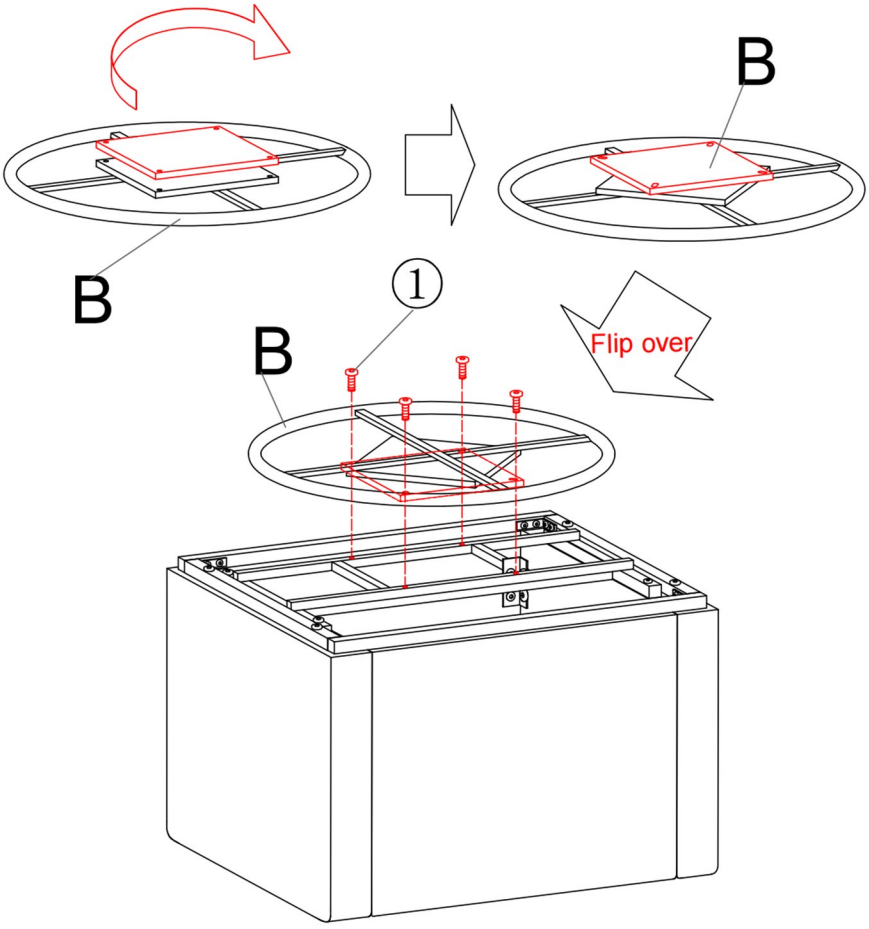

step 10

If you have the leather upholstered chair, please follow this step.

How to Put on the Cushion Cover

1



1.Take the cushion covers and inners out of the carton.

2

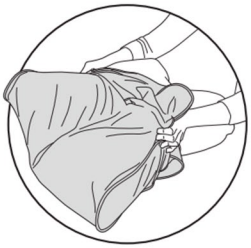

2.Fold the inner in half, pushing the sides together,then begin to slide the cover onto it.

3



3.Align both far corners, then gently compress insert while fitting cover around it.

4



4.To avoid a stuck zipper, please pull the fabric away from the zipper before moving forward.

5

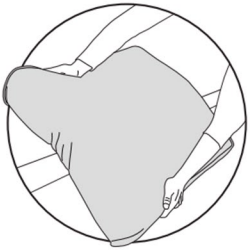

5.When all done, please pat the cushion or give it a little shake to make it more flat.

step 11 ---Place the Seat cushion (G) & Back cushion (E)

Place the seat cushion (G) on it,
then place the back cushion (E) on it.

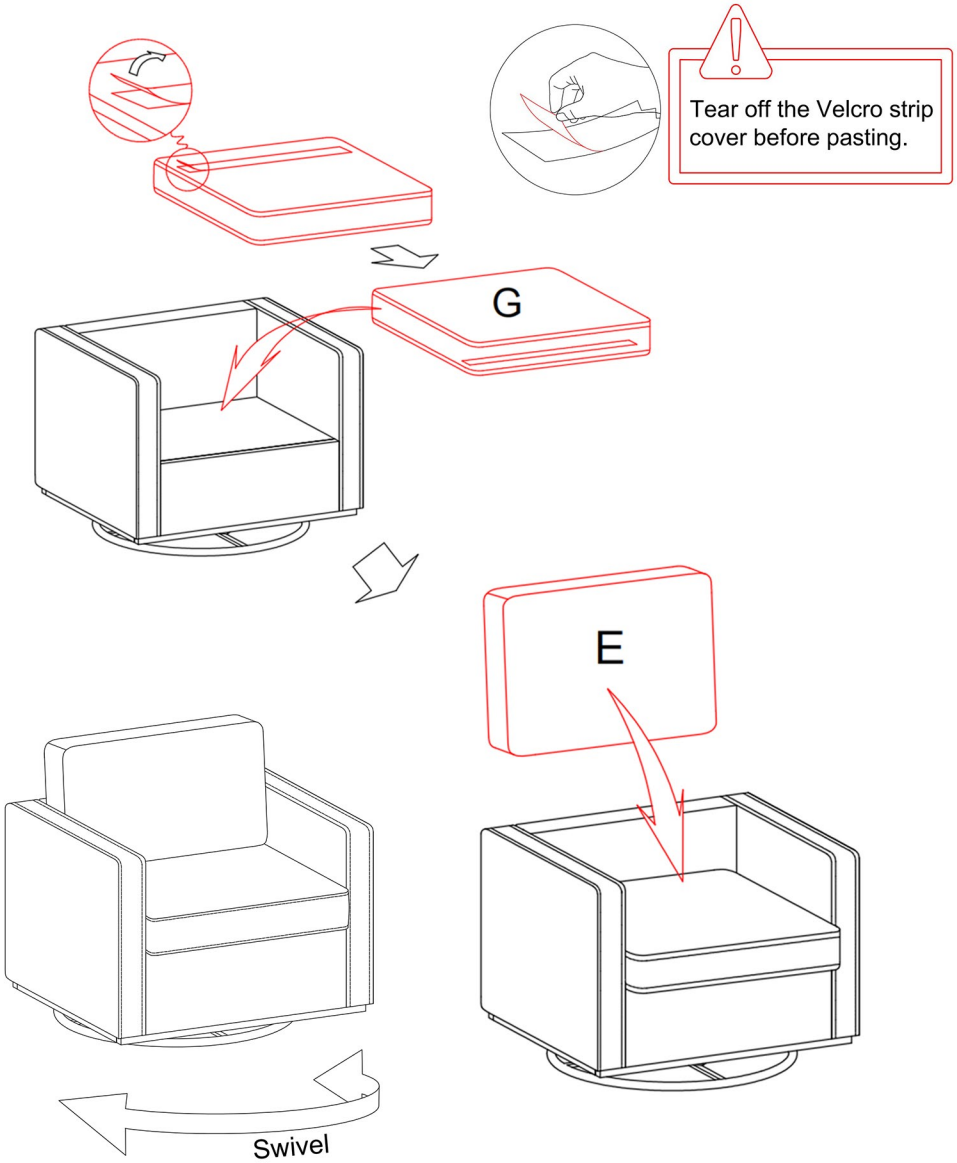



ASSEMBLY INSTRUCTIONS

Tel.(562)-781-3327

Please contact us:info@firstopintl.com

https://www.dreamsidea.com