INSTALLATION
Product Manual

Version: KF510068US-00-26A-YDN

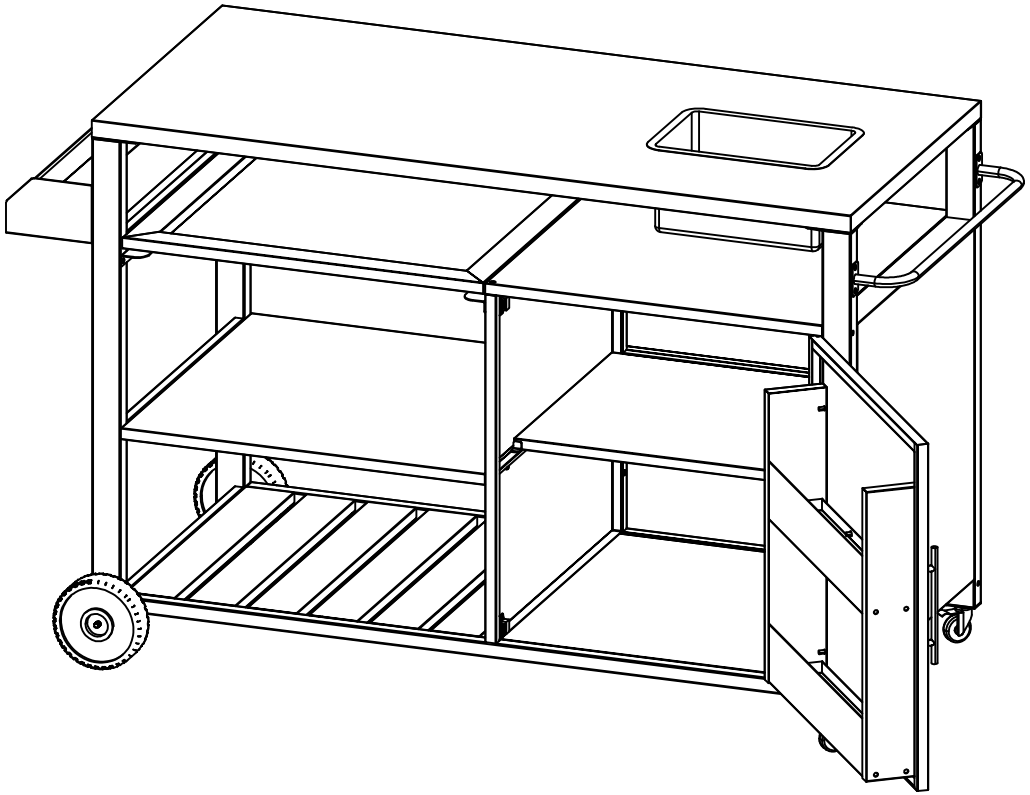

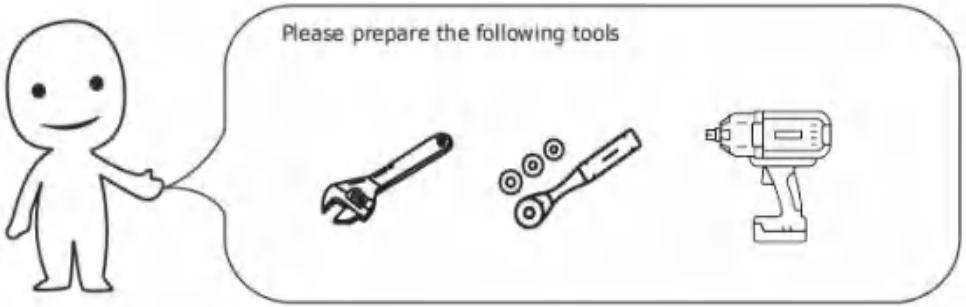

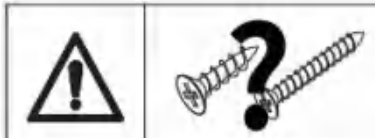

When installing, please carefully confirm whether each screw corresponds to the manual, accessories with similar shapes can be distinguished by size

A M6x16mm 37 pcs	B M6x65mm 6 pcs	C M4x8mm 2 pcs
D M3x8mm 4 pcs	E M6x40 2 pcs	F M6x35mm 2 pcs
G M6 6 pcs	H M6 1 pcs	I 1 pcs
J M8 2 pcs		

1 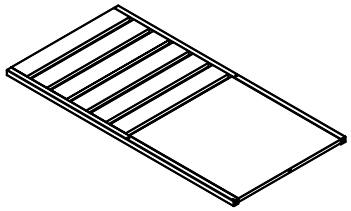 X1	2 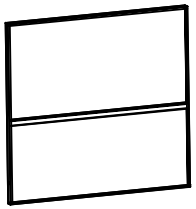 X1
3 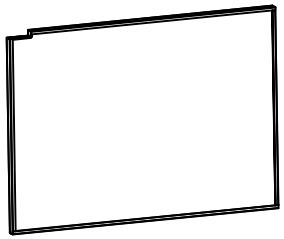 X1	4 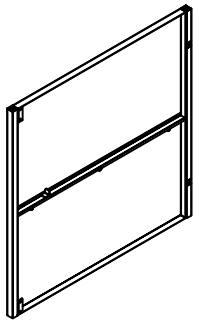 X1
5 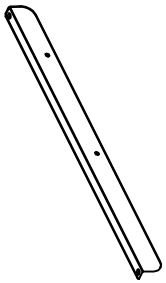 X1	6 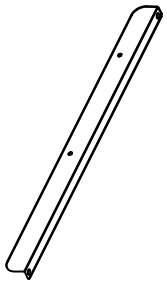 X1
7 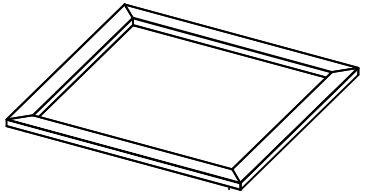 X1	8 X1

9 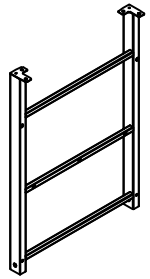 X1	10 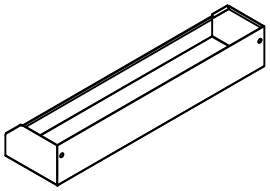 X1
11 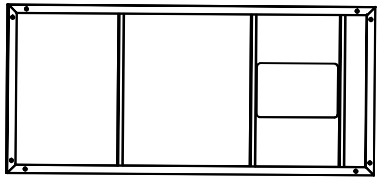 X1	12 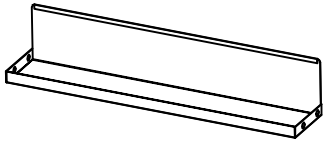 X1
13 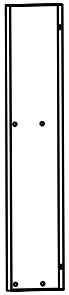 X1	14 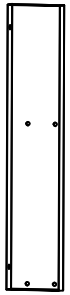 X1
15 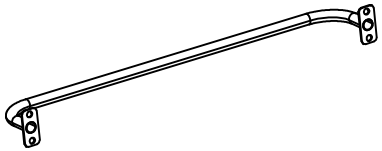 X1	16 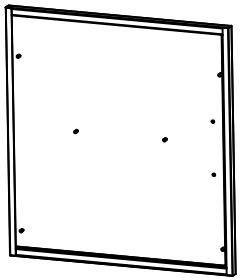 X1

17

X1

18

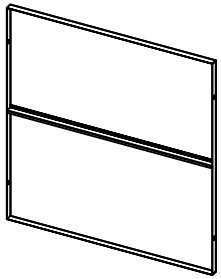

X1

19

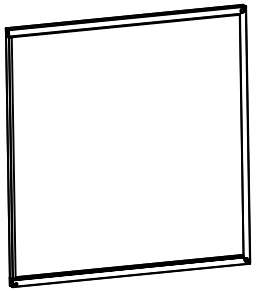

X1

20

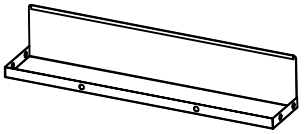

X1

21

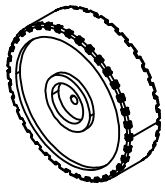

X2

22

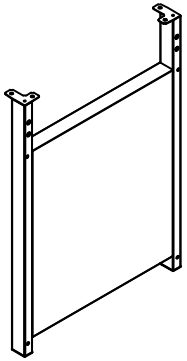

X1

23

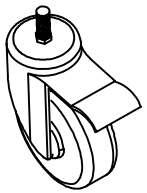

X2

24

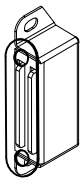

X2

25

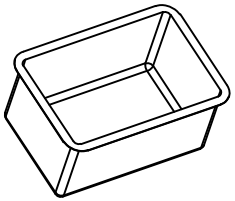

X1

1

22 X1	9 X1	11 X1	1 X1

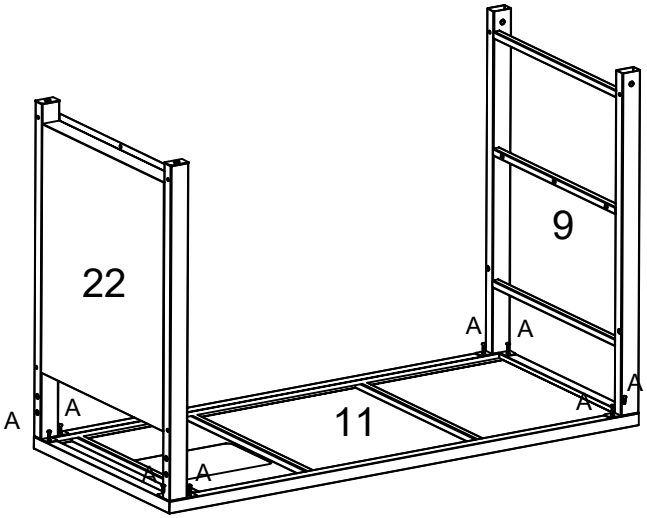

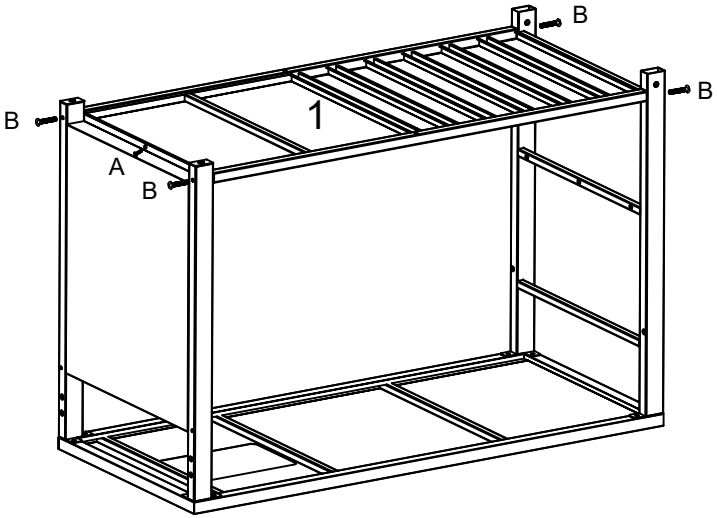

2

23 X2	21 X2	

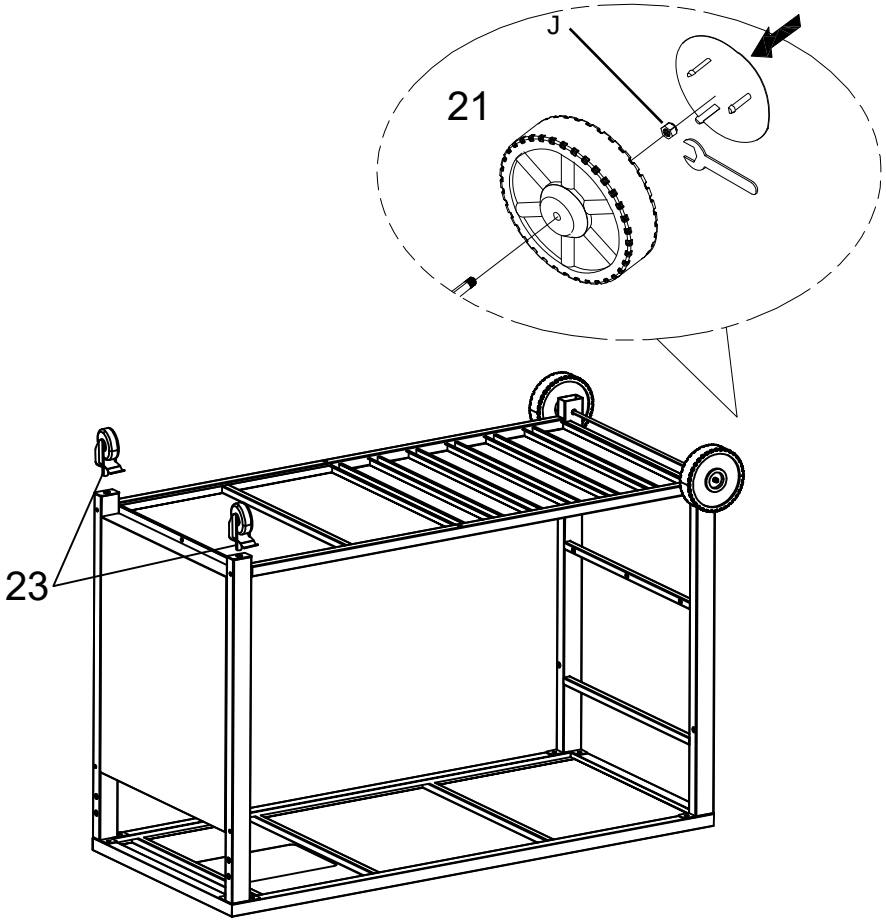

3

2 X1	4 X1	

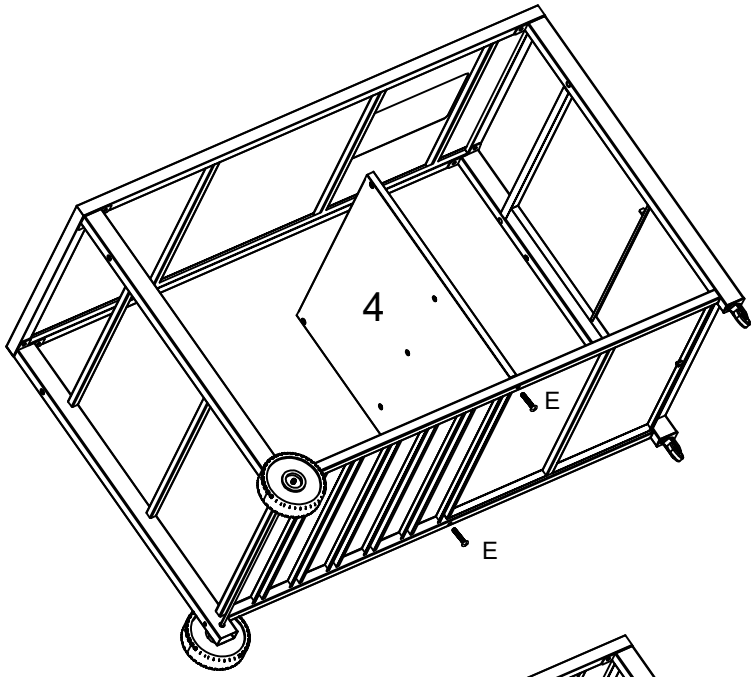

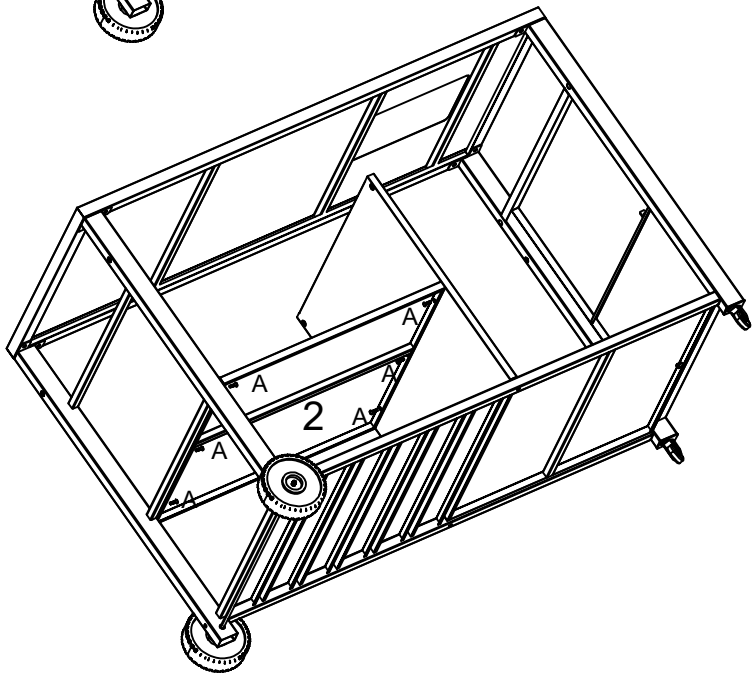

4

18 X1	24 X2

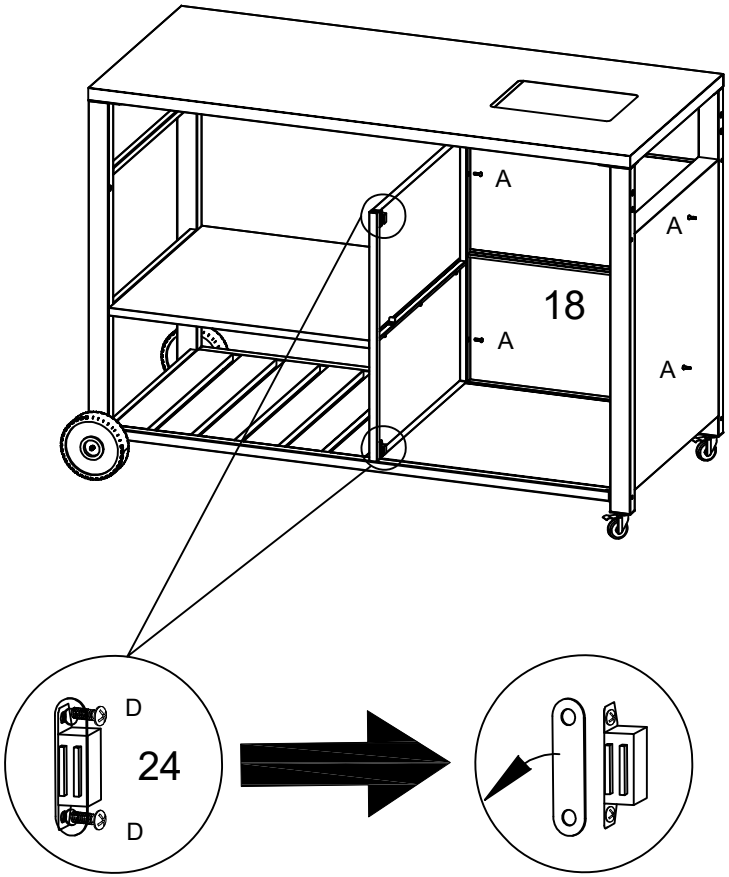

5

⑤ X1	⑥ X1	⑦ X1	⑲ X1	

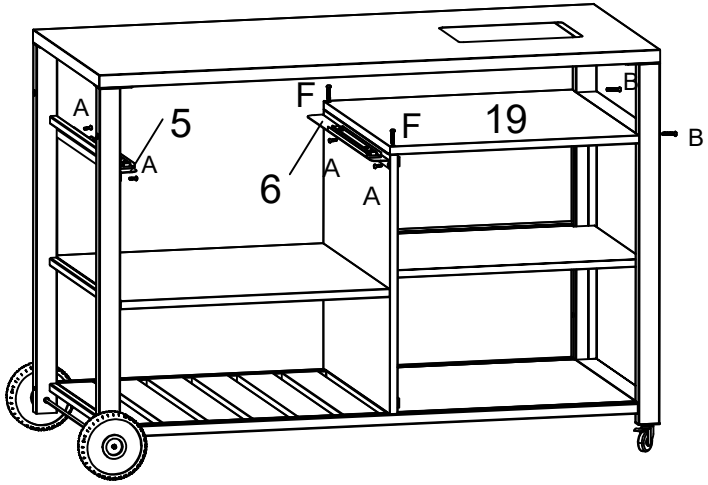

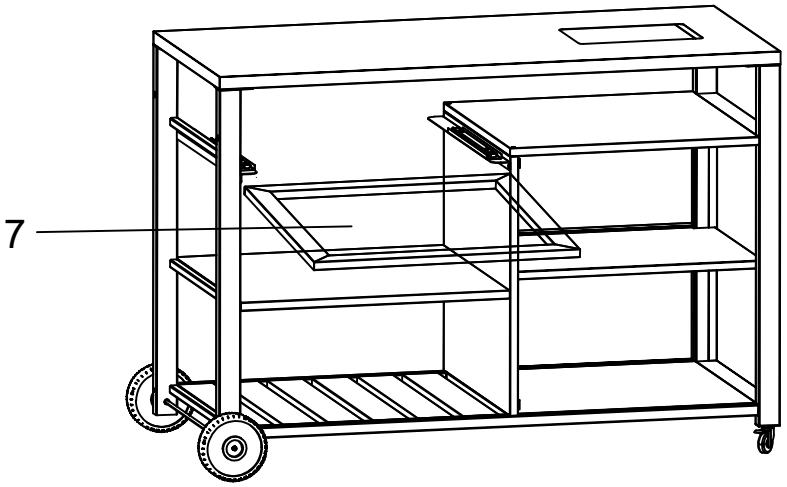

6

12 X1	13 X1	14 X1	16 X1	17 X1	20 X1
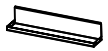					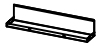

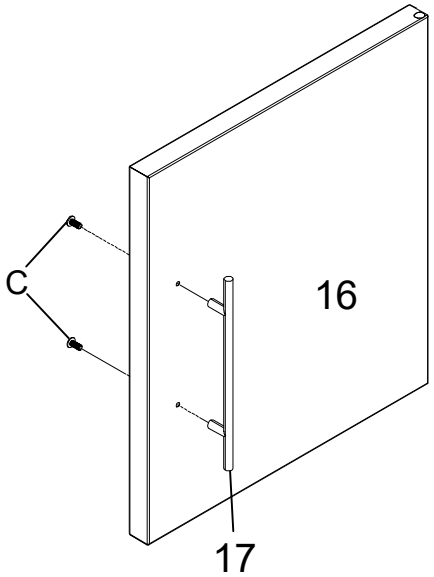

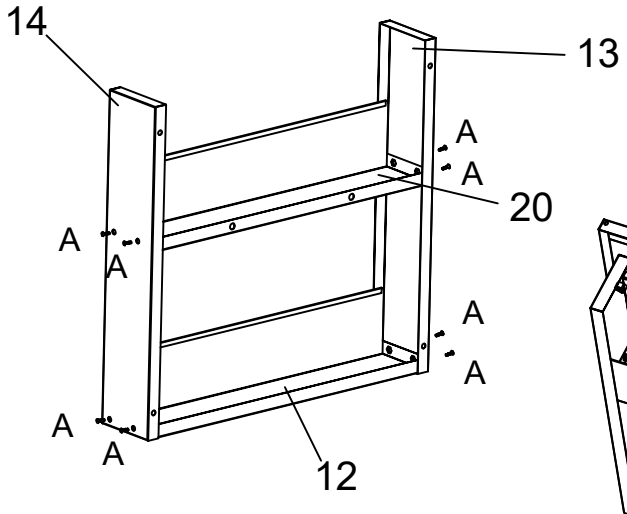

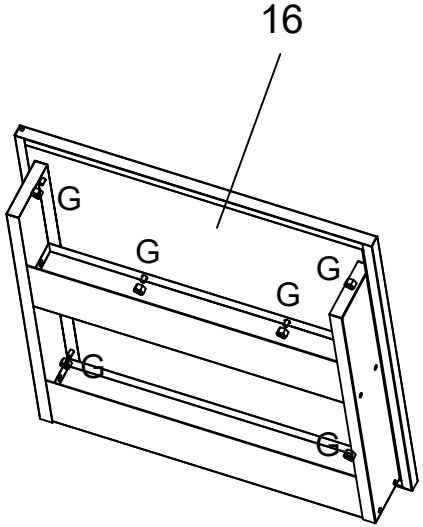

7

10 X1	25 X1	

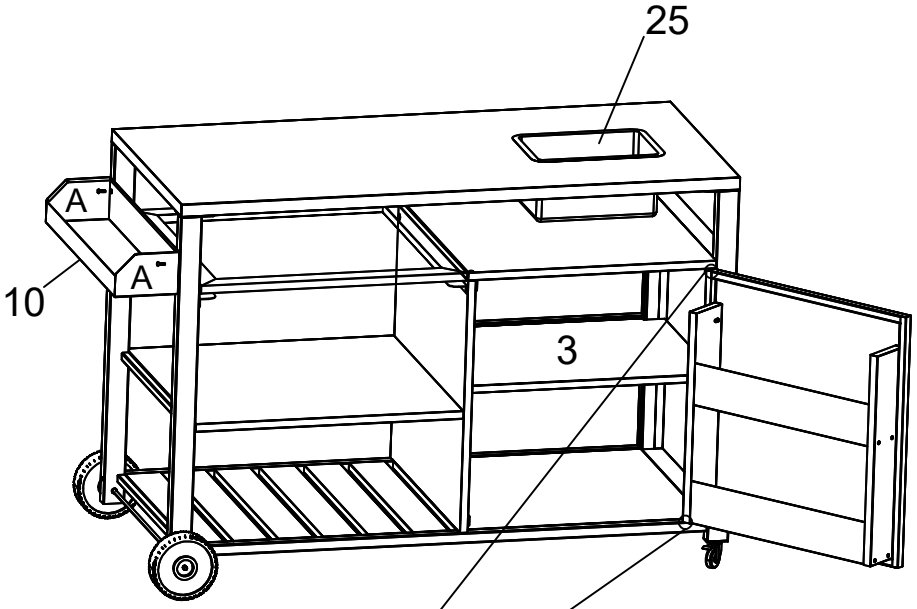

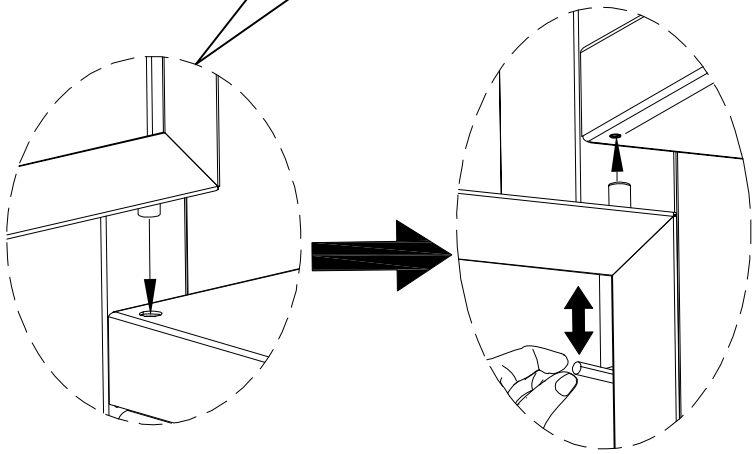

8

15 X1	

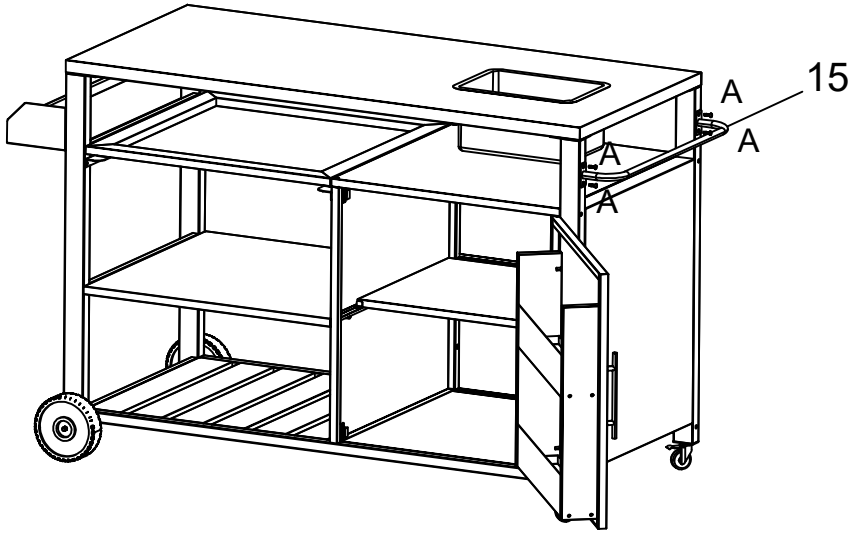

WARRANTY

WARRANTY CLAIMS

•There is a 30-day warranty for broken furniture or any other problems that do not work properly. The warranty will start from the date of purchase which must be verified by proof of purchase.

•Before making a claim, we may be able to answer your query, simply call us. Please leave your purchase order number, along with some details of the problem, if you want a replacement part. We will arrange within 48 hours. If there is out of stock, we will reply with a shipping date.

•The product must be used in accordance with the instructions provided. For health reasons.

•For other reasons, if the furniture needs to be returned, it must be cleaned and dried and operated within 30 days of receipt.

Type of Warranty Claim

•Failure to follow the furniture instructions will invalidate the warranty. Attention please.

•Does not include damage during installation, but includes damage during transportation.

Scope of responsibility

•Shall not bear any responsibility for misuse or user damage and / or loss of parts during the installation of furniture.

•After using, the damage and scratches of the furniture are not covered by the warranty.

The Warranty Relates to All Bought in The Us and Covers The Following Areas

•Sheet parts: 1 month from the date of purchase.

•Electrical parts: 1 month from the date of purchase.

RETURNS

CHANGED YOUR MIND AND NEED TO RETURN YOU ITEM?

PLEASE FOLLOW THE BELOW INSTRUCTIONS:

- If you have purchased and have simply changed your mind, follow the retailer's instructions for returns.

DEFECTIVE ITEMS

- If your item is defective in any way, i.e. it doesn't work but you can't identify why, in the first instance, please call us.

DAMAGED ITEMS

- If you receive an order with obvious shipping damage from the retailer, then we suggest the delivery is refused. If the delivery has been accepted and then shipping damage is found, please follow the specific instructions advised by the retailer.
  In all circumstances please save all packaging material and paperwork for the order. Please be aware that if you dispose of packaging material or attempt to return the merchandise without contacting the fulfiller, you jeopardise your chances of making a claim, and you may not receive a credit for the return.

AFTER-SALES CONTACT

208-820-0799