Set-Up Instruotion

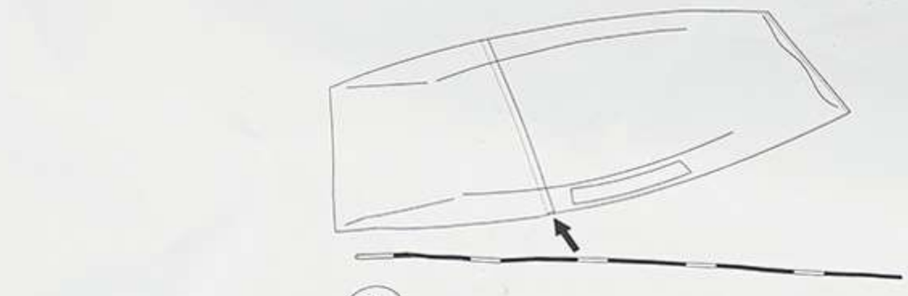

1

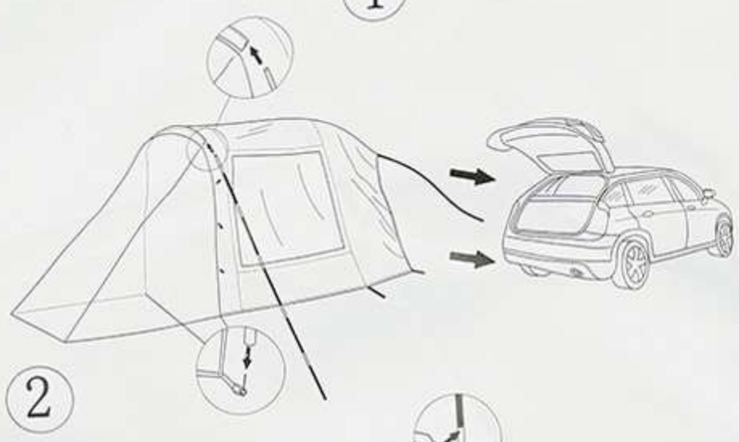

2

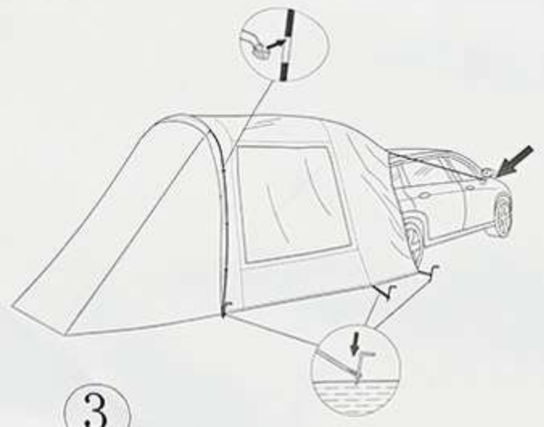

3

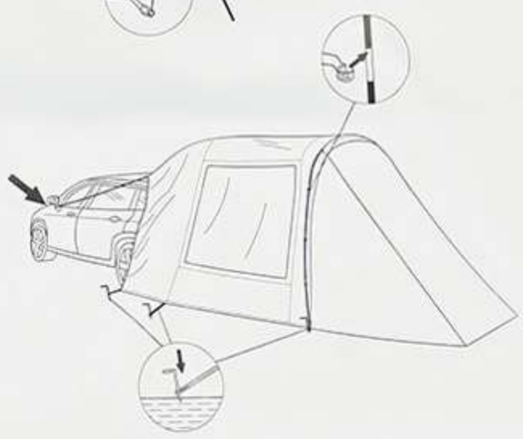

4



5



6



7