PANEL POSITION

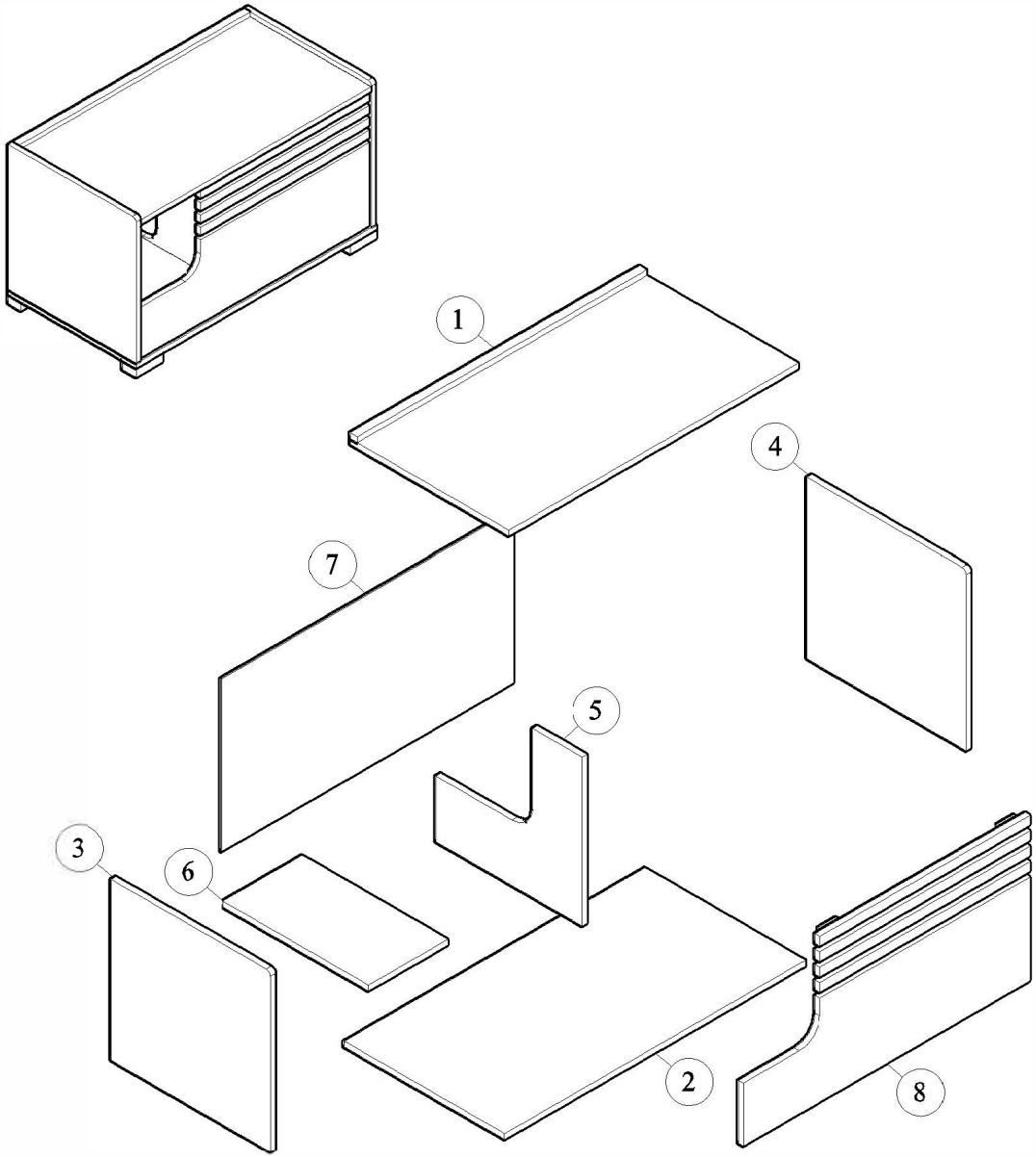

	ACCESSORIES		QUANTITY
A		MINIFIX M5 x 24MM	5 PCS
B		MINIFIX CASING	9 PCS
C		WOOD DOWEL M8 x 30MM	11 PCS
D		HYDRAULIC HINGES 7/8" SCREW M3.5 x 16MM	3 PCS 18 PCS
E		SCREW M6 x 50MM	6 PCS
F		PVC LEG SCREW M4x38MM	5 PCS 10 PCS
G		STOPPER INSERT	1 PC
H		ALLEN KEY	1 PC
I		STUB SCREW M3x20MM	4 PCS 4 PCS
J		IRON SHELF SUPPORT	4 PCS

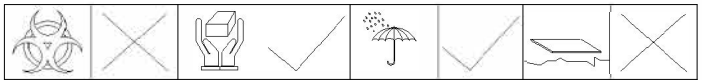

CHEMICAL	HANDLE WITH CARE	KEEP DRY	HARD SURFACE

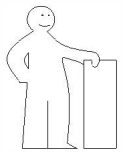

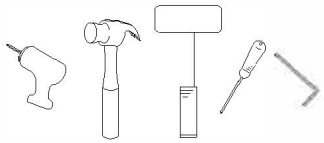

START ASSEMBLY

STEP 1

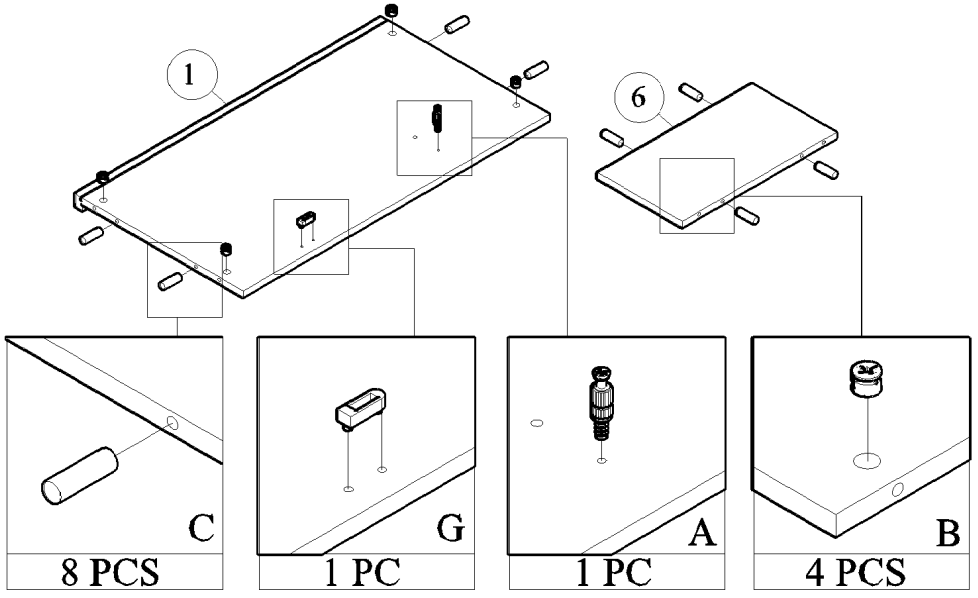

STEP 2

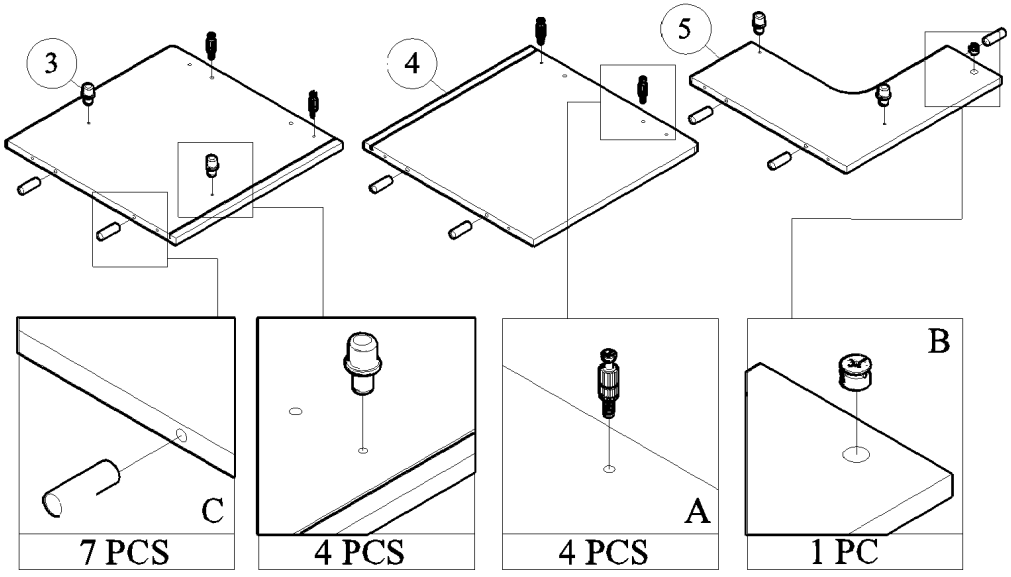

STEP 3

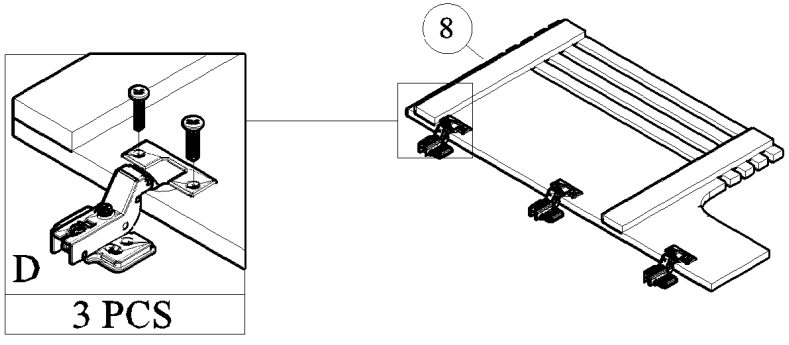

STEP 4

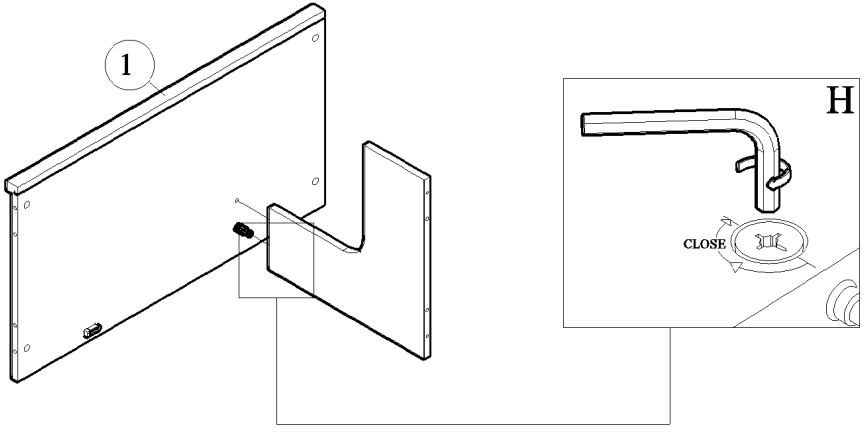

STEP 5

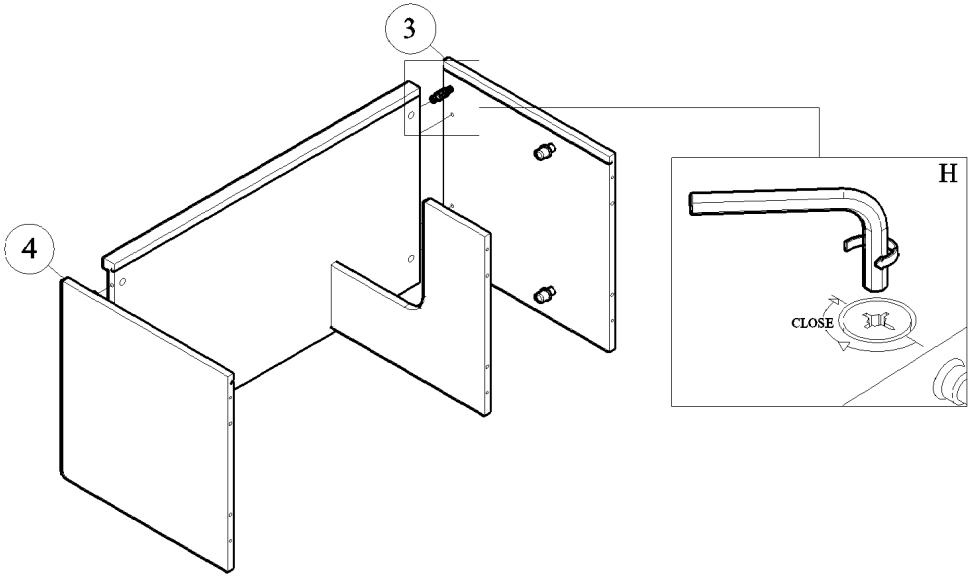

STEP 6

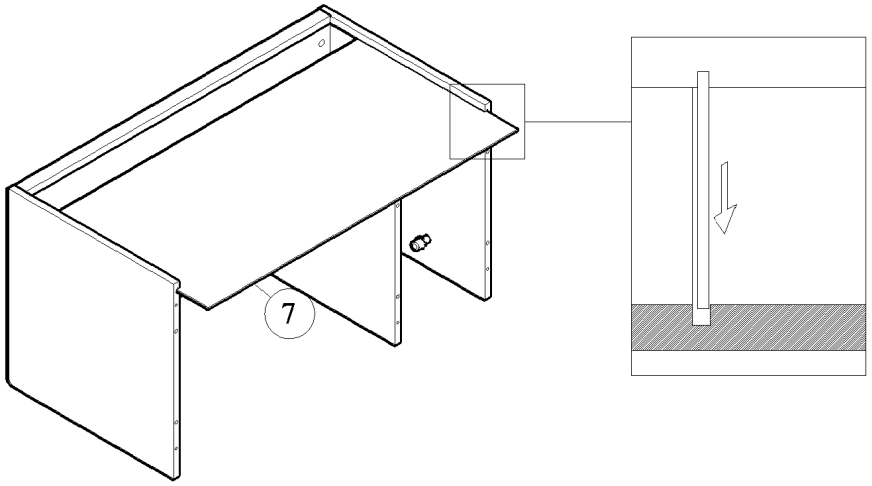

STEP 7

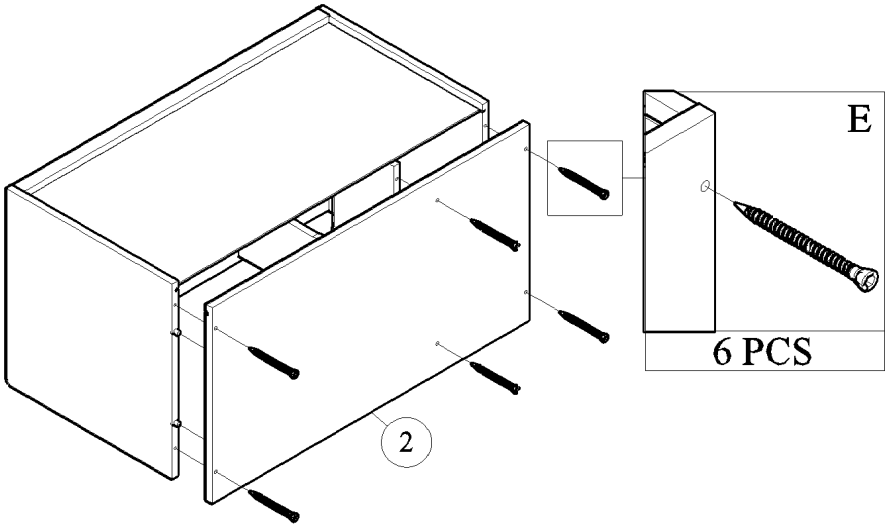

STEP 8

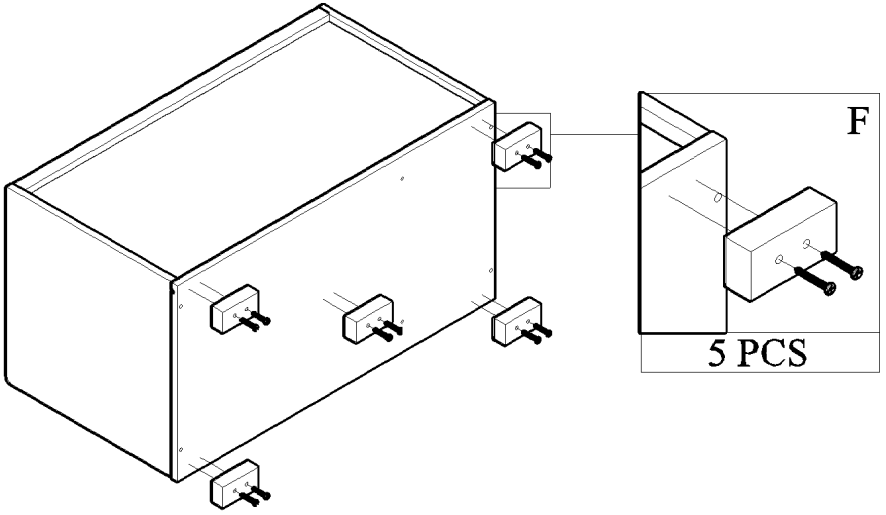

STEP 9

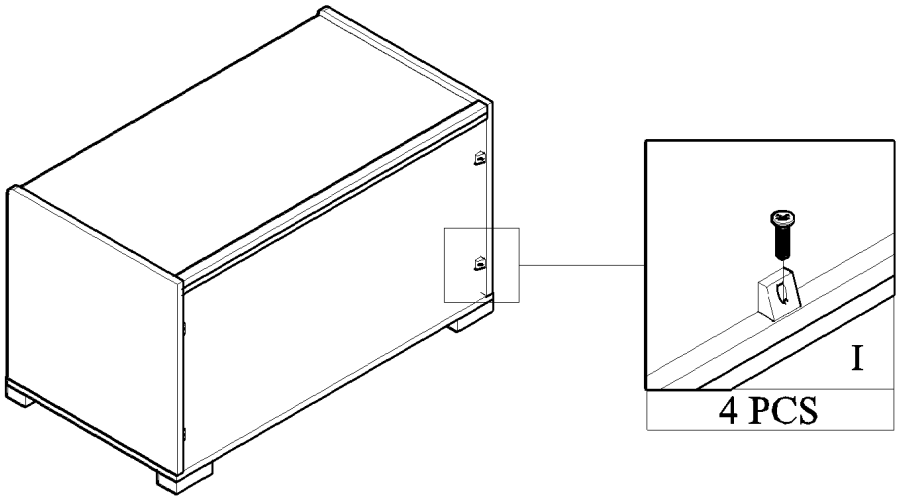

STEP 10

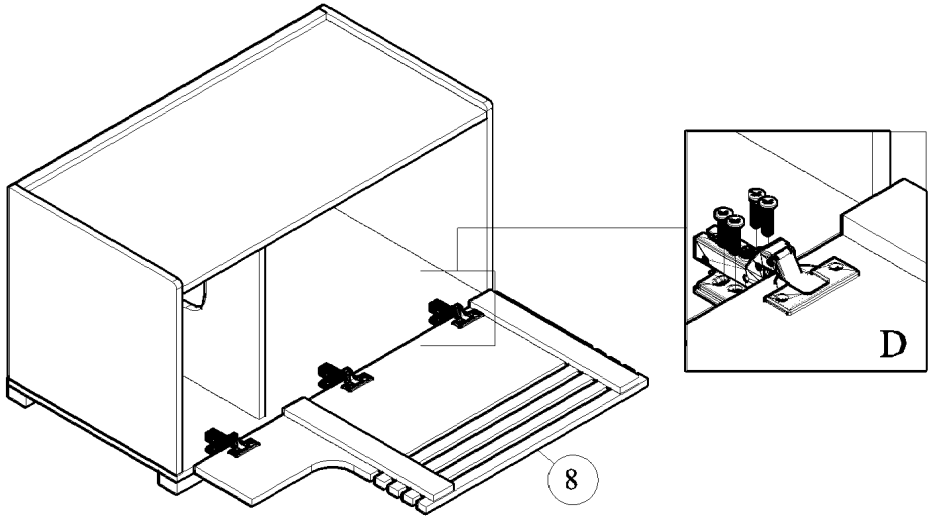

STEP 11

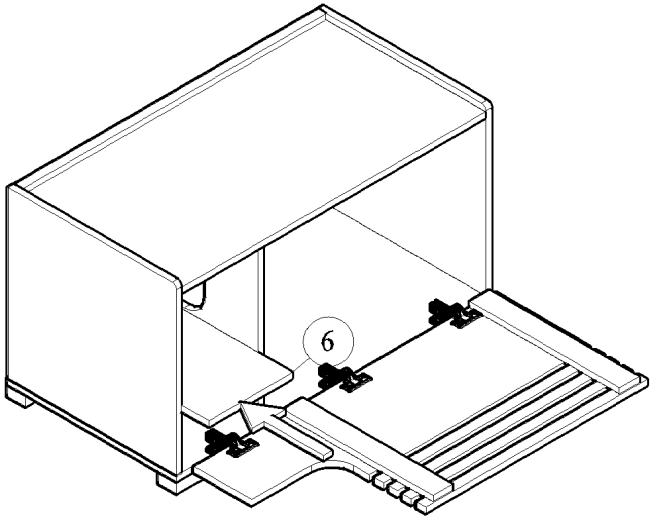

COMPLETED

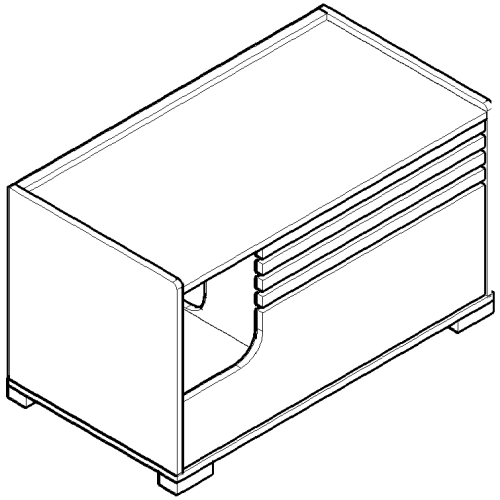

HOW TO ADJUST GLASS/DOORS

● There is a gap between the door and the shelf with doors closed

Loosen the back adjustable screw which is one of the two screws looking from the front while supporting the doors, adjust the door by moving it back and forth, then tighten the back screw.

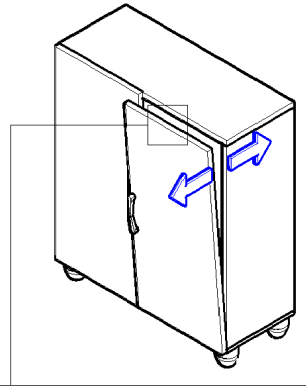

If there is a gap between the doors on the top.

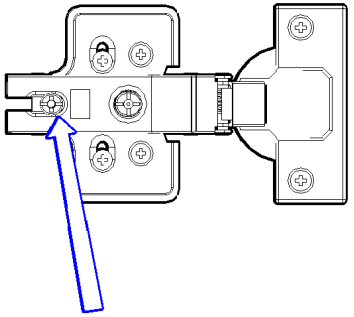

Loosen this screw, adjust by moving back and forth

● There is a gap in the middle with doors closed

Loosen the ① back adjustable screw which is one of the two screws looking from the front while supporting the doors, tighten the ② screw clockwise, then adjust the middle gap. After adjusted, tighten the ① screw.

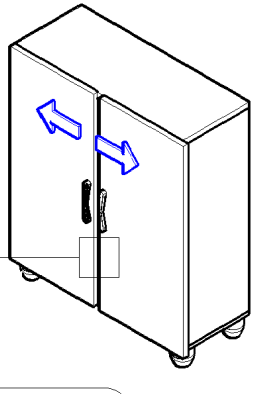

If the gap is wide

① Fixing screw

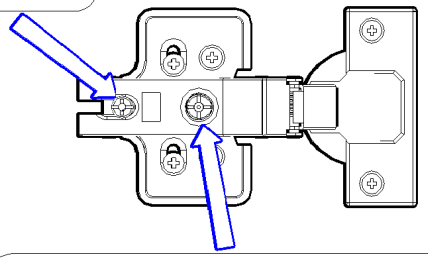

② Adjusting screw
(If you twist clockwise once, the door moves about 2mm inward)

● There is a gap on the top of the door when doors are closed
(Glass slide hinge does not require this step)
(4 screw hole hinge does not require ①)

Loosen the slide hinge screw while supporting the door, adjust the door by moving it up and down then tighten the screws.
(Please loosen the slide hinge screws of the door completely you are adjusting before moving it up and down.)

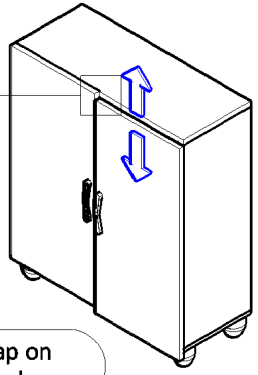

If there is a gap on the top of the door

① Open screw

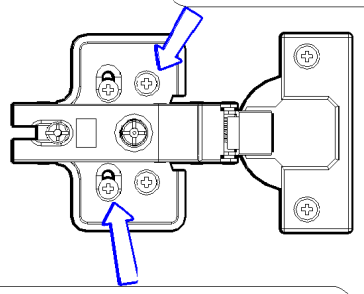

② Slide hinge screws (Please loosen these screws before adjusting)

● There is a V gap when doors are closed

Loosen the ①back adjustable screw which is one of the two screws looking from the front while supporting the doors, tighten the ② screw clockwise, then adjust the middle gap. After adjusted, tighten the ① screw.

If there is a gap between the doors on the top (Please adjust slide hinge the top part door)

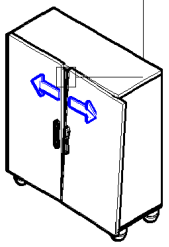

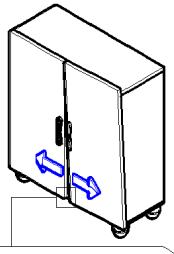

If there is a gap between the doors on the bottom (Please adjust slide hinge the bottom part door)

① Fixing screw

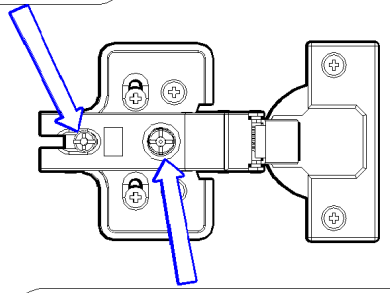

② Adjusting screw
(If you twist clockwise once, the door moves about 2mm inward)