F09B602 & F09B606 & F09B610

ROCKING BENCH GLIDER

A1		Left Arm Rest	1PC
A2		Right Arm Rest	1PC
B		Seat Back	1PC
C		Seat Base	1PC
D		Linkage Rod	2PCS
E		Chair Base	1PC
F		M6 x 18 Socket Head Cap Screw	6PCS
G		M6 x 40 Socket Head Cap Screw	10PCS
H		Washer	16PCS

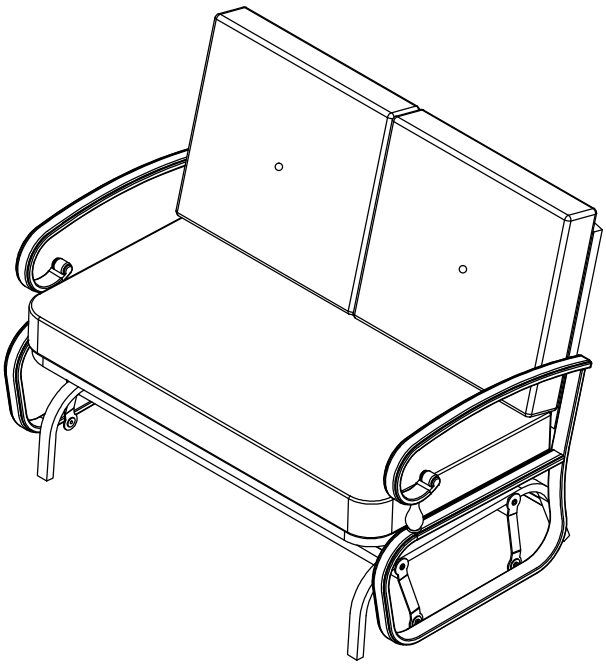

J		Plastic Washer	8PCS
K		Allen Key	1PC
L		Back Cushion	2PCS
M		Seat Cushion	1PC

1 Attach left and right arm rest (A1&A2) to seat base (C) using M6 x 18 socket head cap screw (F) and washer (H) as shown. Do this in four places.

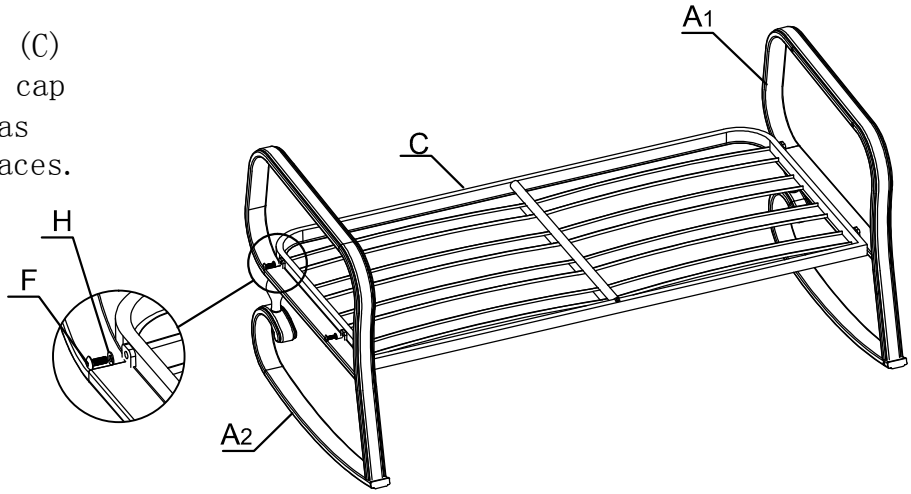

Loose attach all connections at the beginning, adjust alignments then fully tighten all joints

F09B602 & F09B606 & F09B610

ROCKING BENCH GLIDER

② Attach seat back (B) to left and right arm rest (A1&A2) using M6 x 40 socket head cap screw (G) and washer (H) in four places as shown. Connect seat back (B) to seat base (C) using M6 x 18 socket head cap screw (F) and washer (H).

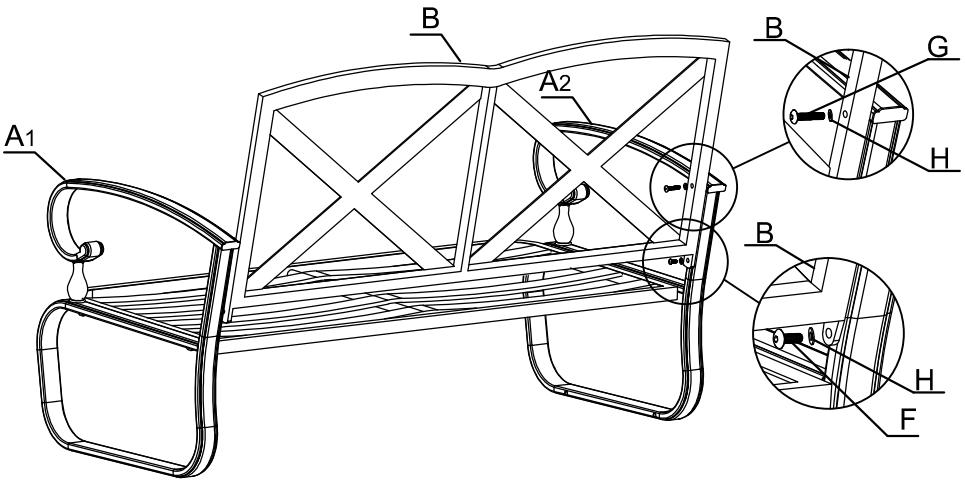

③ Flip over the assembly. Attach linkage rod (D) to left and right arm rest (A1&A2) through the upper holes using M6 x 40 socket head cap screw (G), washer (H) and plastic washer (J) as shown.

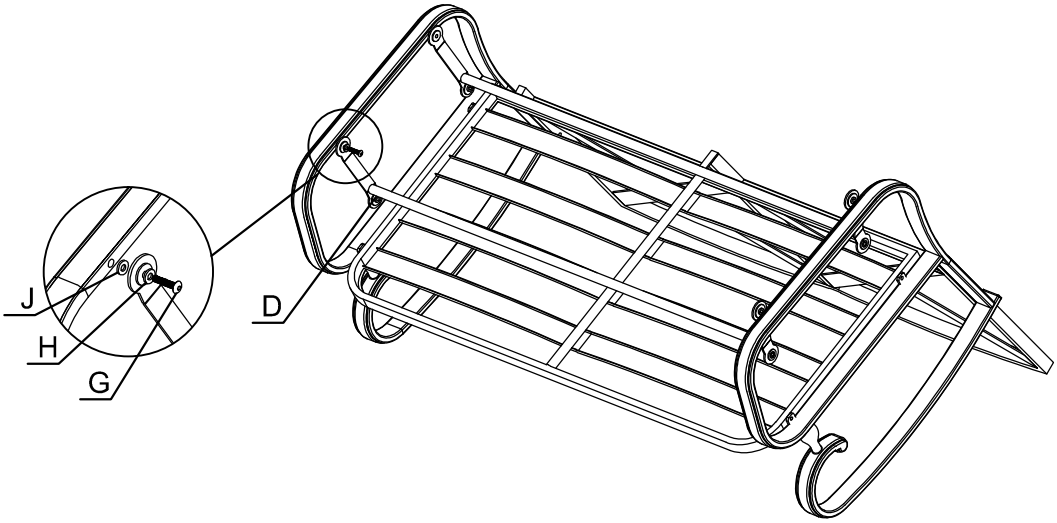

Loose attach all connections at the beginning, adjust alignments then fully tighten all joints

F09B602 & F09B606 & F09B610

ROCKING BENCH GLIDER

④ With the assembly still flipped, attach chair base (E) to linkage rod (D) through the lower holes using M6x40socket head cap screw (G), washer (H) and plastic washer (J) as shown.

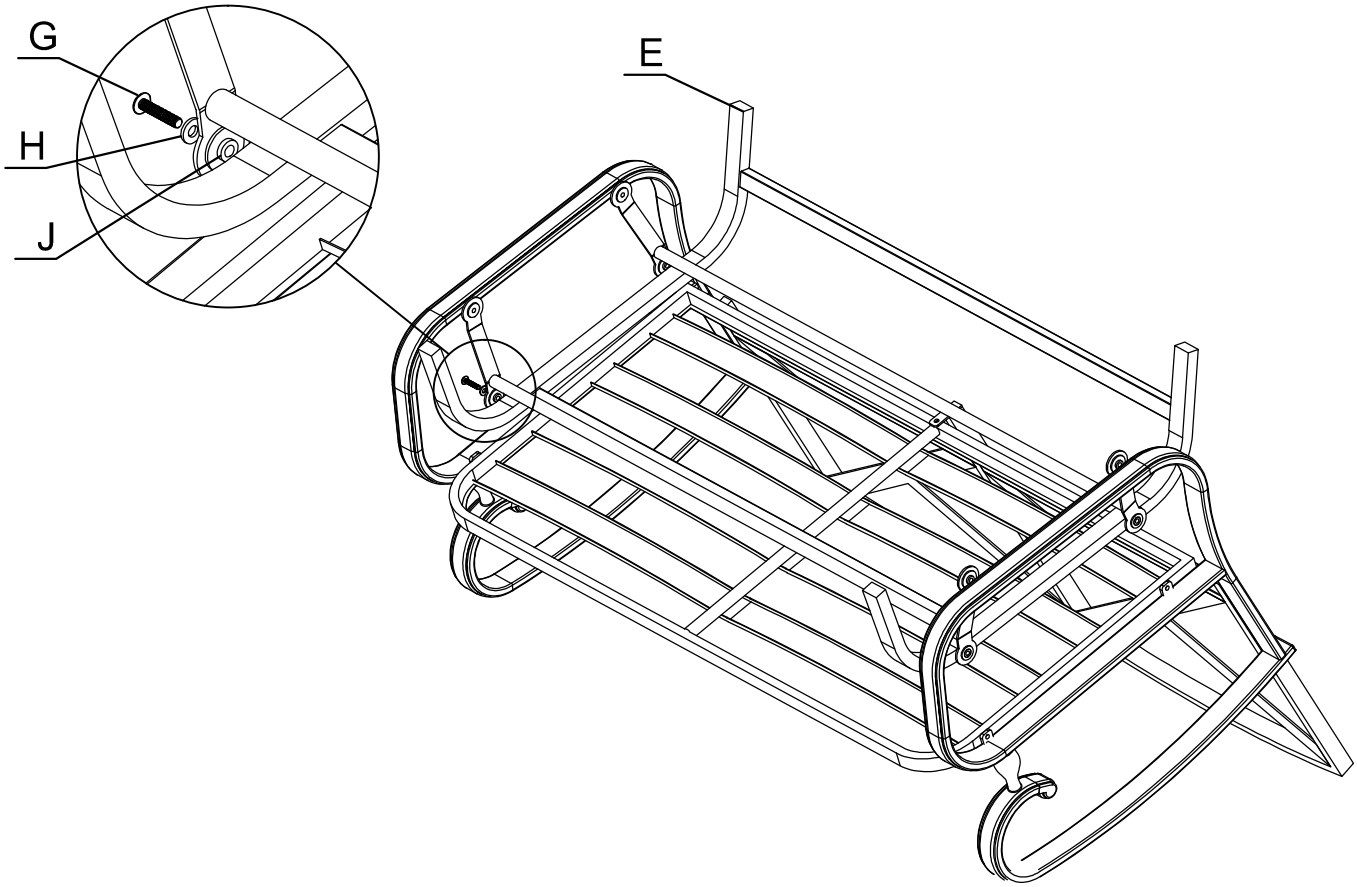

Loose attach all connections at the beginning, adjust alignments then fully tighten all joints