ASSEMBLY INSTRUCTION FOR RECTANGULAR TABLE

1

2

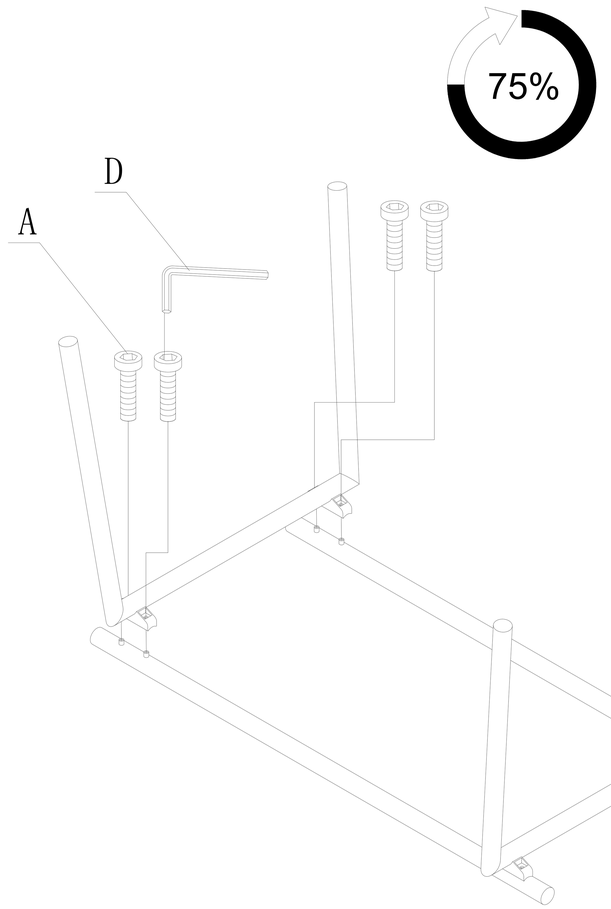

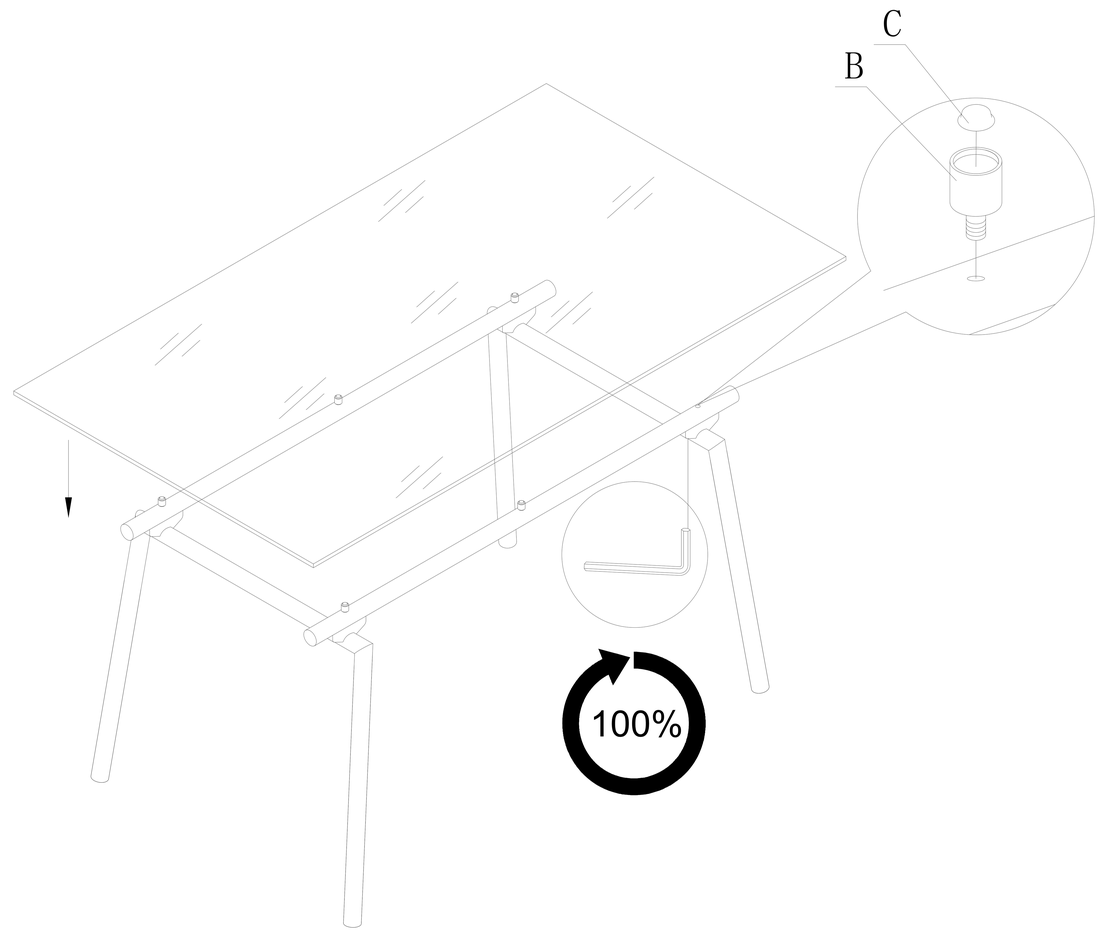

A	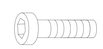	8
B	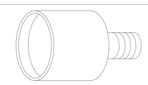	6
C		6
D		1