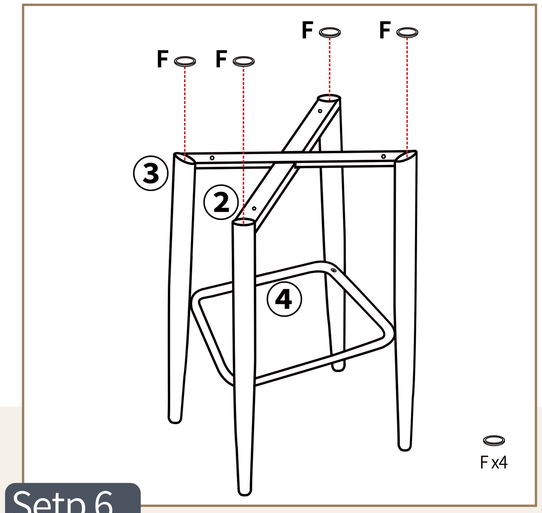


## Setp 6

Put 4 pcs Plastic protection tabs **F** on the metal legs (Step 5). This will usually come pre-assembled from the factory.

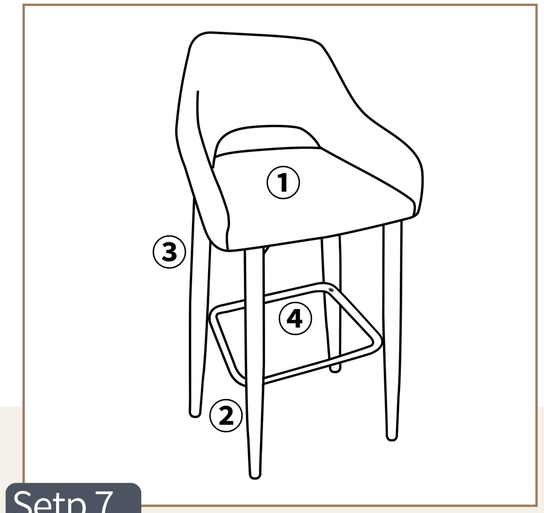


## Setp 7

The legs of the table labeled "Front" are placed over the front, and then the Seat ① is placed.

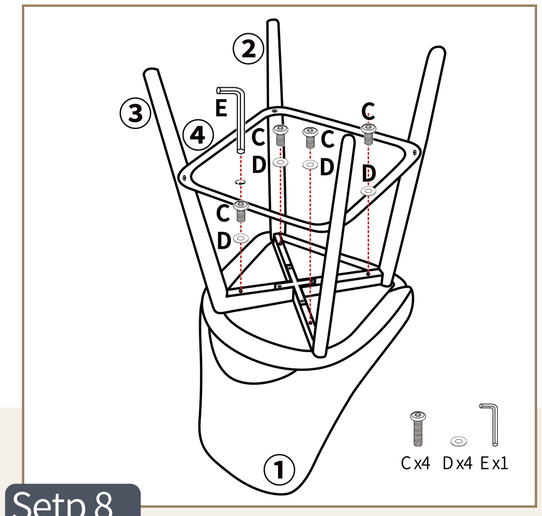


## Setp 8

Put 4 pcs Plastic protection tabs **F** on the metal legs (Step 5). This will usually come pre-assembled from the factory.

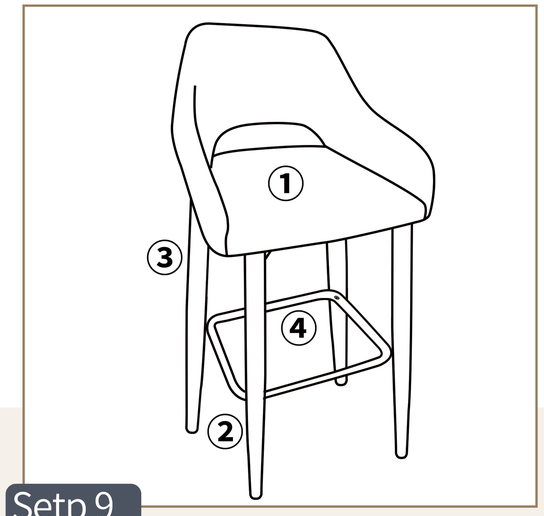


## Setp 9

FINISH



# EXPLODED VIEW

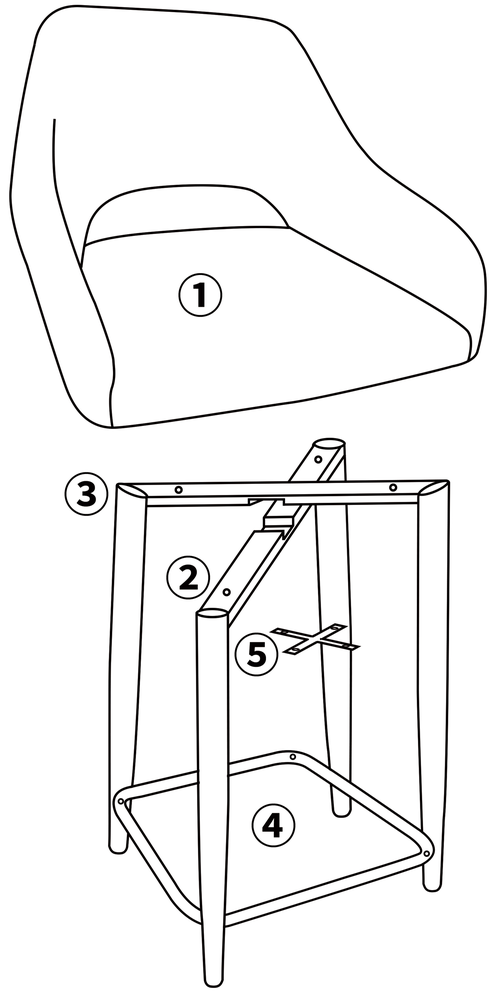

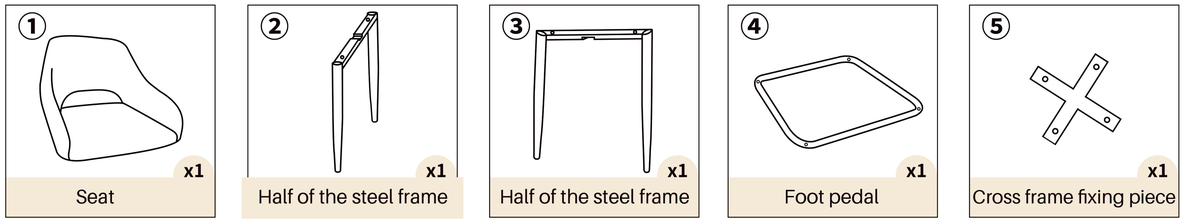
# PARTS LIST