21238 Deluxe Pulpit Instructions

Video ins link: http://www.fixturedisplays.com/video/21238.AVI

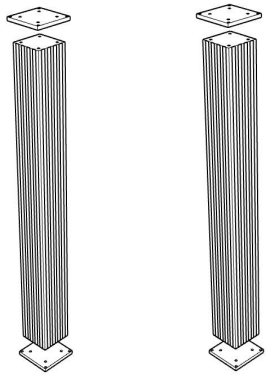

1. Fasten end plates to leg both ends with screws. Bottom plate edge holes are larger than top plate's.

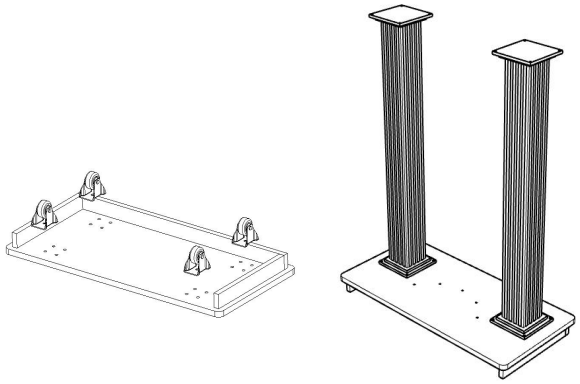

2. -Fasten skirts to base bottom. Install casters.
-Fasten legs to base with screws.

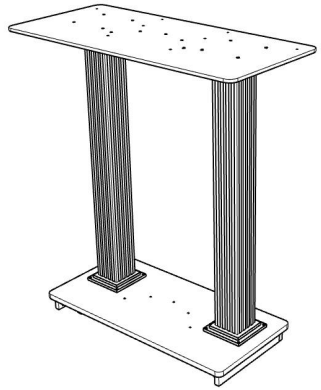

3. Fasten top panel to legs with screws. Wide end without holes face user.

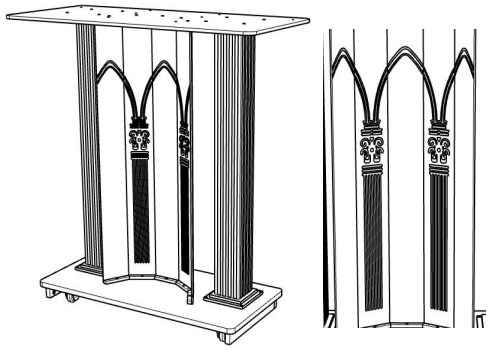

4. Fasten connectors to 5 decorating panels. Follow illustrated pattern, fasten panels to top and base. Bottom conectors have bigger edge holes.

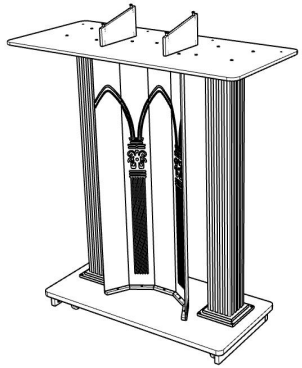

5. Fasten support blocks to top panel with screws.

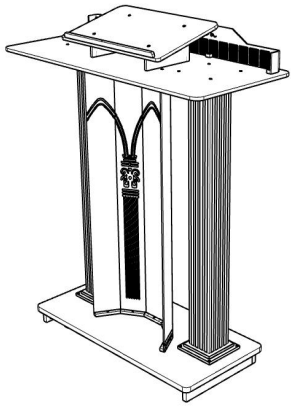

6. Fasten reading panel to blocks, the stopper to reading panel with screws. Fasten decorative guard to top.

We are here to help. Contact us for any issues before filing returns. God bless. **cs@fixturedisplays.com**