Assembly instructions

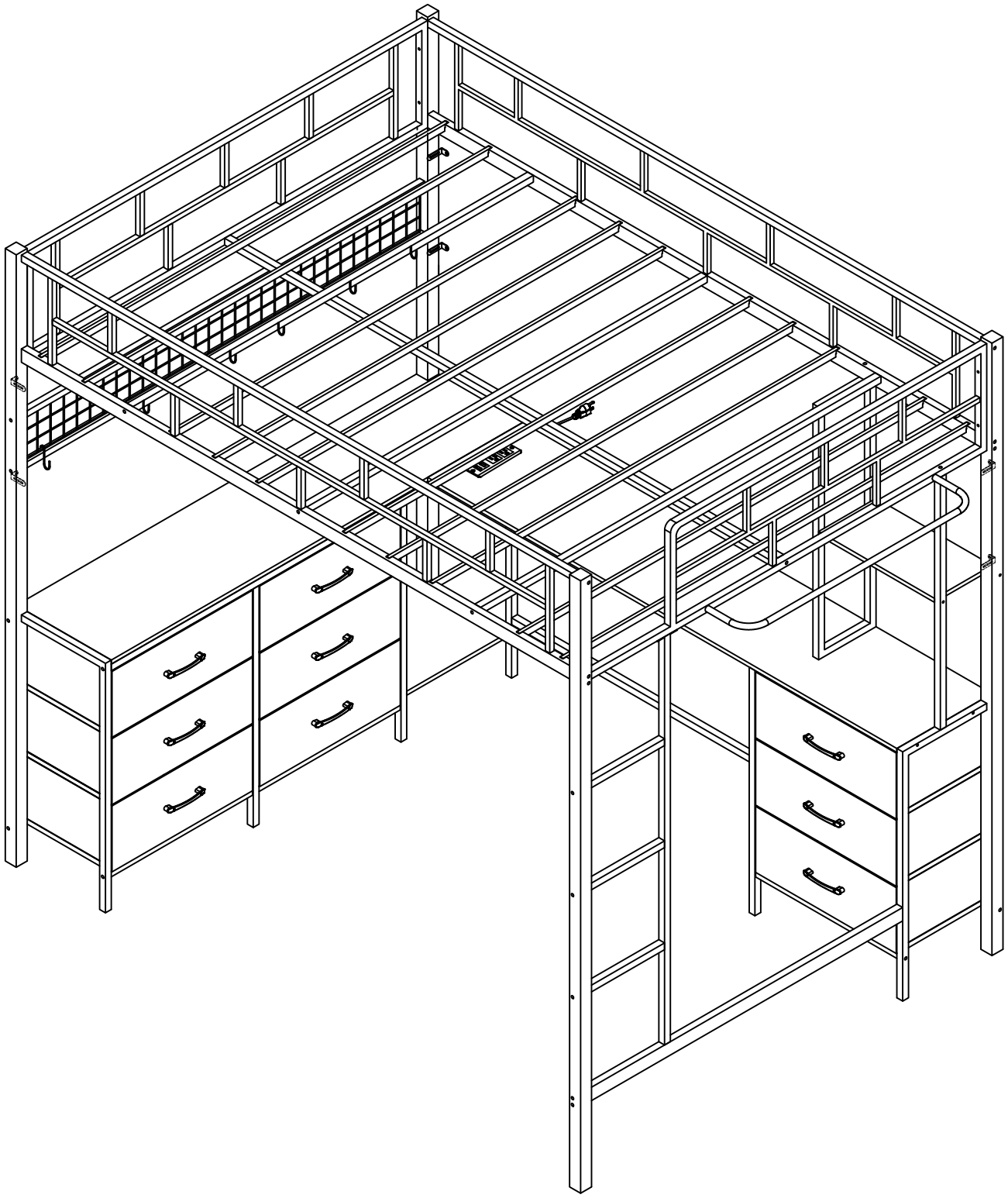

For product support or inguiries, please reach out to us at harpaqservice@gmail.com

Parts List

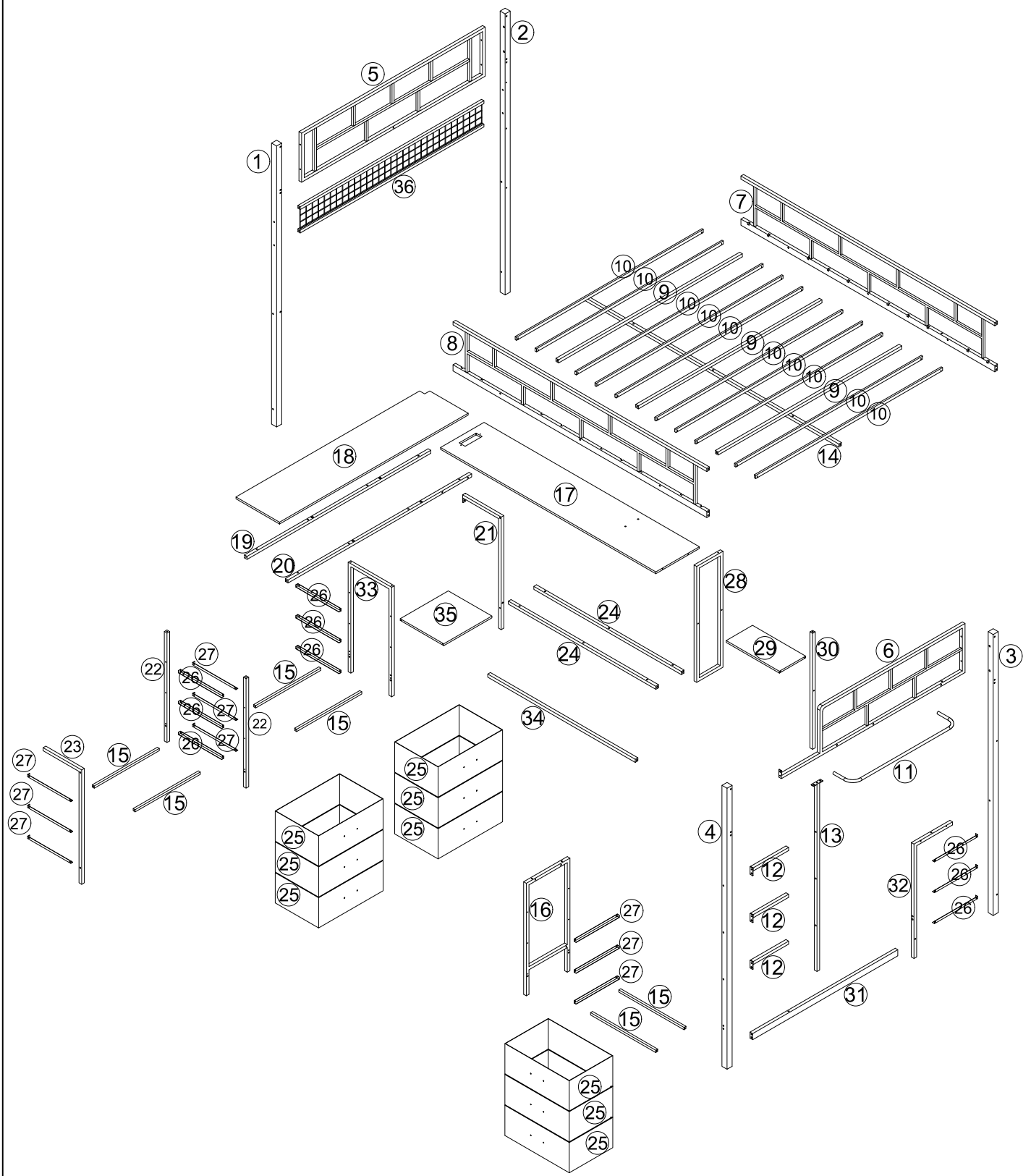

For product support or inguiries, please reach out to us at harpaqservice@gmail.com

Parts List / Teile Liste

1	2	3	4
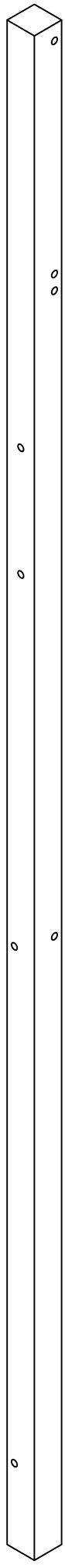	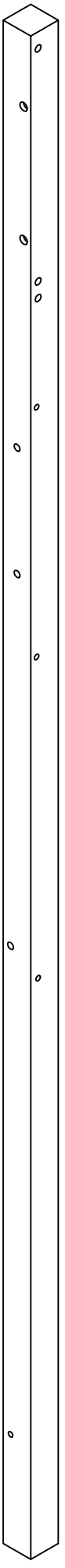		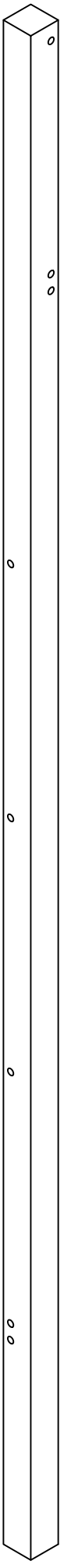
×1	×1	×1	×1

For product support or inguiries, please reach out to us at harpaqservice@gmail.com

Parts List / Teile Liste

5 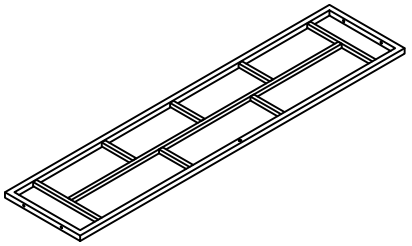 ×1	6 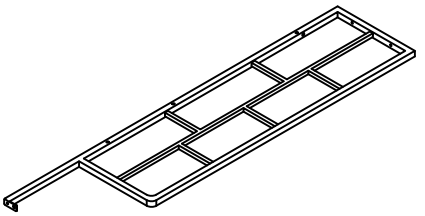 ×1	7 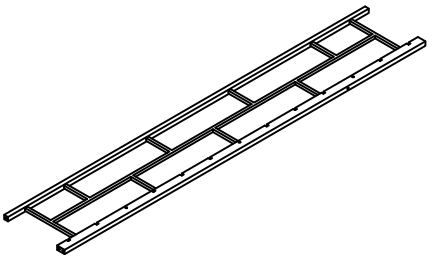 ×1
8 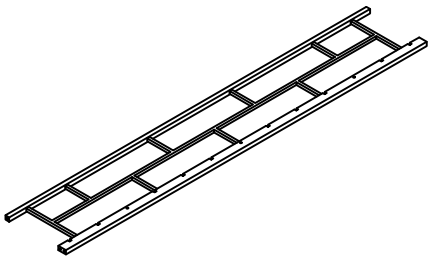 ×1	9 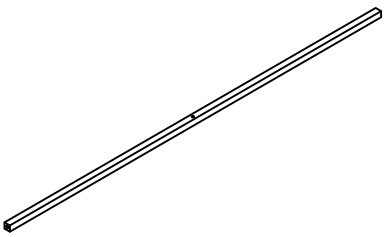 ×3	10 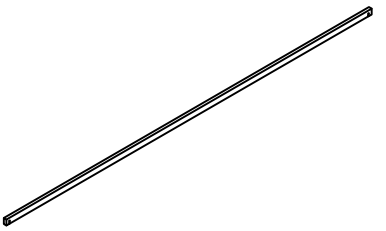 ×10
11 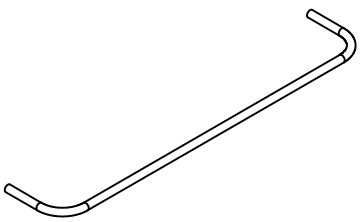 ×1	12 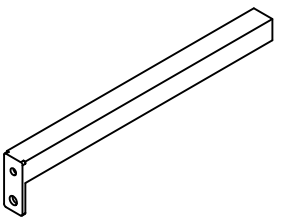 ×3	13 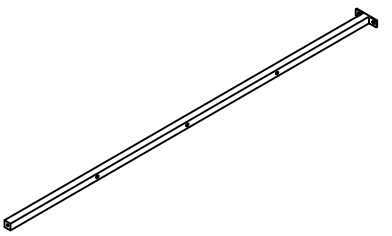 ×1
14 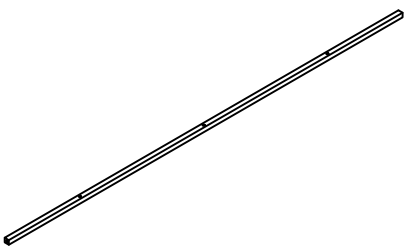 ×1	15 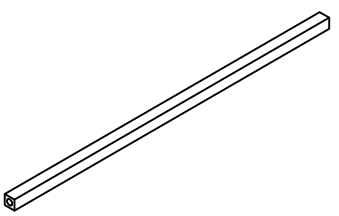 490x15mm ×6	16 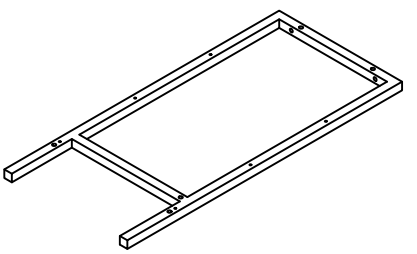 ×1
17 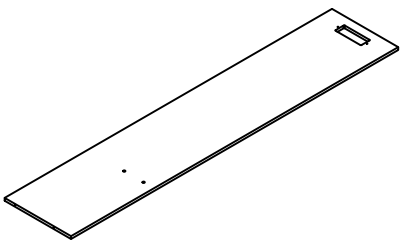 ×1	18 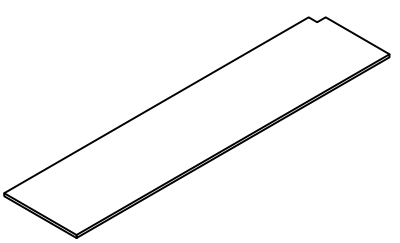 ×1	19 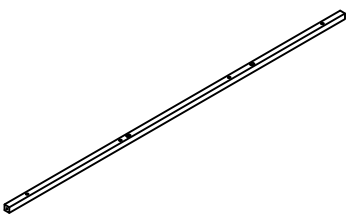 1382x20mm ×1

For product support or inguiries, please reach out to us at harpaqservice@gmail.com

Parts List / Teile Liste

20 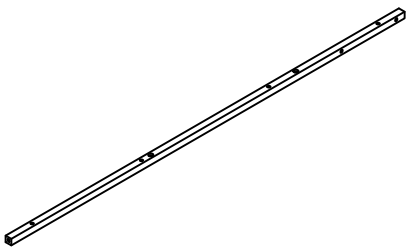 1382x20mm ×1	21 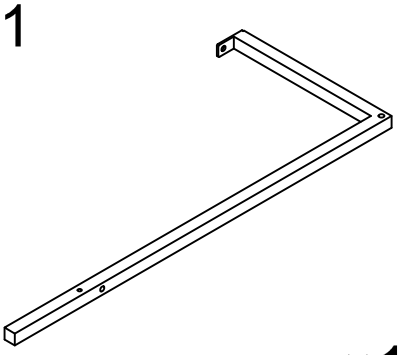 ×1	22 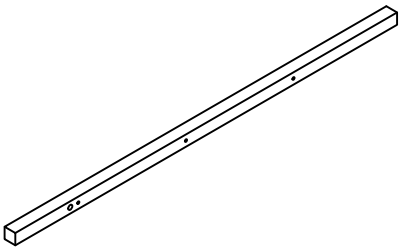 713x20mm ×2
23 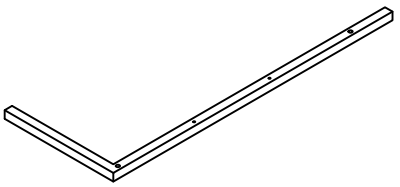 ×1	24 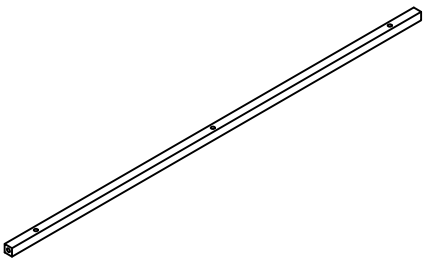 1110x20mm ×2	25 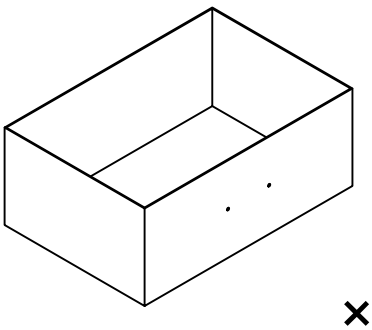 ×9
26 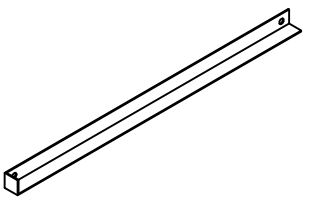 ×9	27 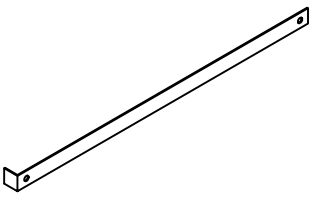 ×9	28 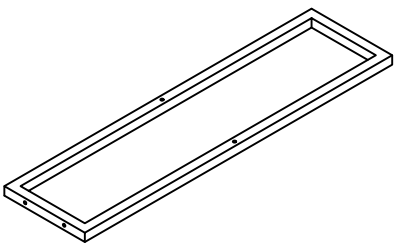 ×1
29 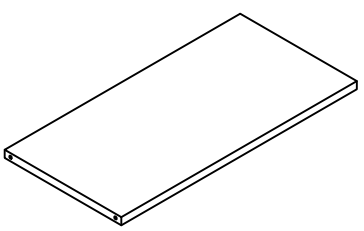 ×1	30 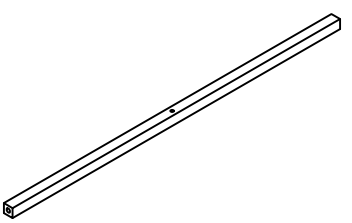 ×1	31 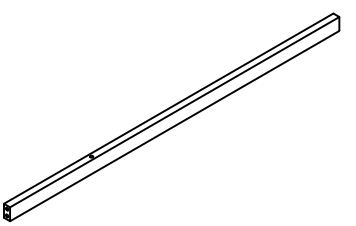 ×1

For product support or inguiries, please reach out to us at harpaqservice@gmail.com

Parts List / Teile Liste

32 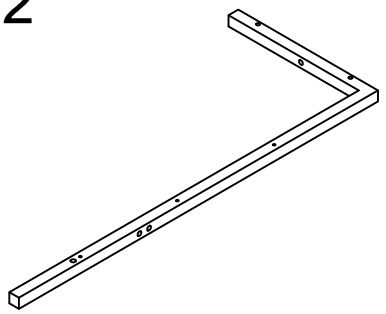 ×1	33 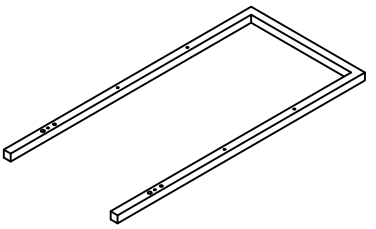 ×1	34 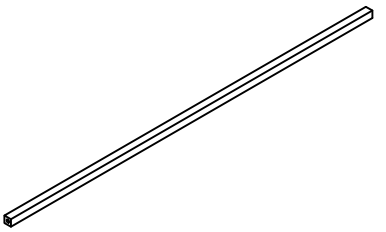 1110x20mm ×1
35 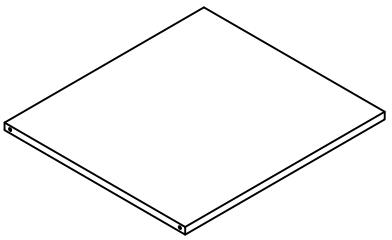 ×1	36 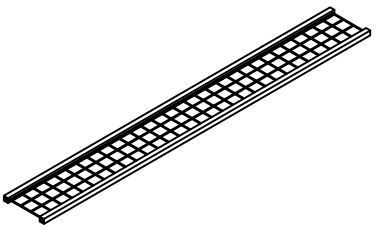 ×1	

Parts List / Teile Liste

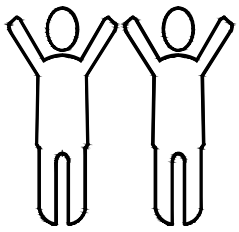

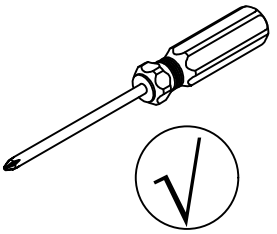

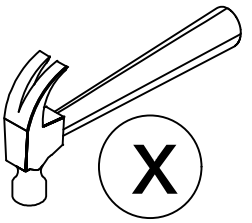

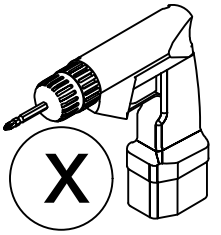

A 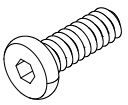 1/4x10mm 8PCS	B 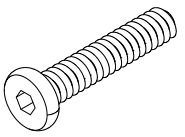 1/4x28mm 24PCS	C 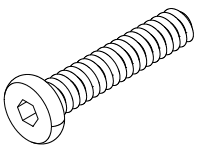 1/4x35mm 43PCS
D 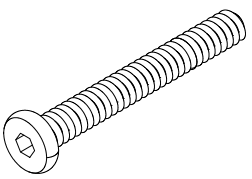 1/4x55mm 31PCS	E 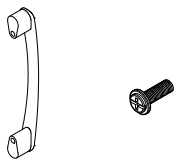 E1x9pcs E2x19pcs	F 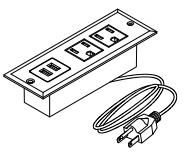 1 PC
G 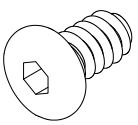 M5x10mm 45 PCS	H  H1 H2 H3 H4 1PC	I 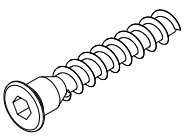 M5x40mm 9 PCS
J 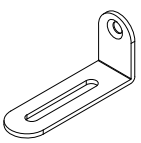 6 PCS	K 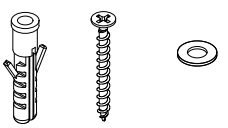 K1 K2 K3 7 PCS	L 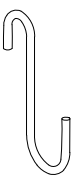 6 PCS
M 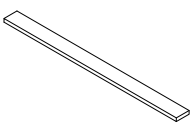 4PCS	N 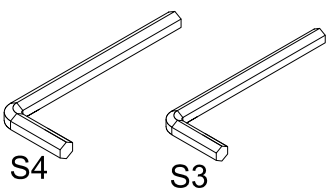 S4 S3 1 PC	0 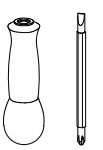 1 PC
P 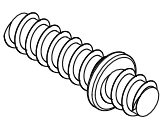 1/4x40mm 2PCS	Q 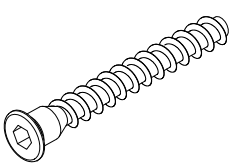 M5x60mm 2PCS	R 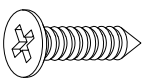 M3.5x12mm 3PCS

■ Please don't tighten the screws completely and go back later for a final tightening of all the screws after pieces are aligned with each other.



For product support or inguiries, please reach out to us at harpaqservice@gmail.com

Assembly Steps / Montageschritte

STEP 1

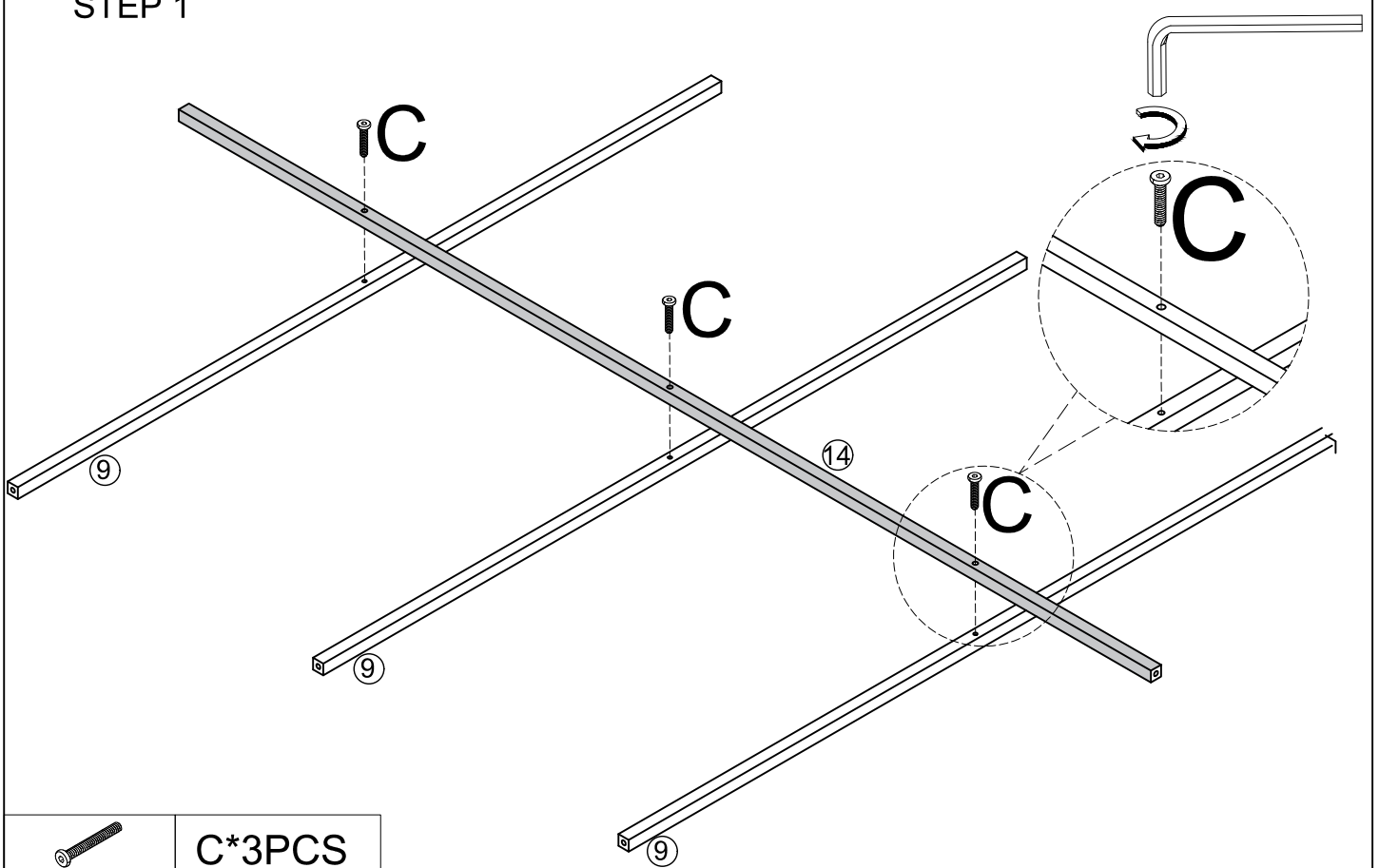

	C*3PCS

STEP 2

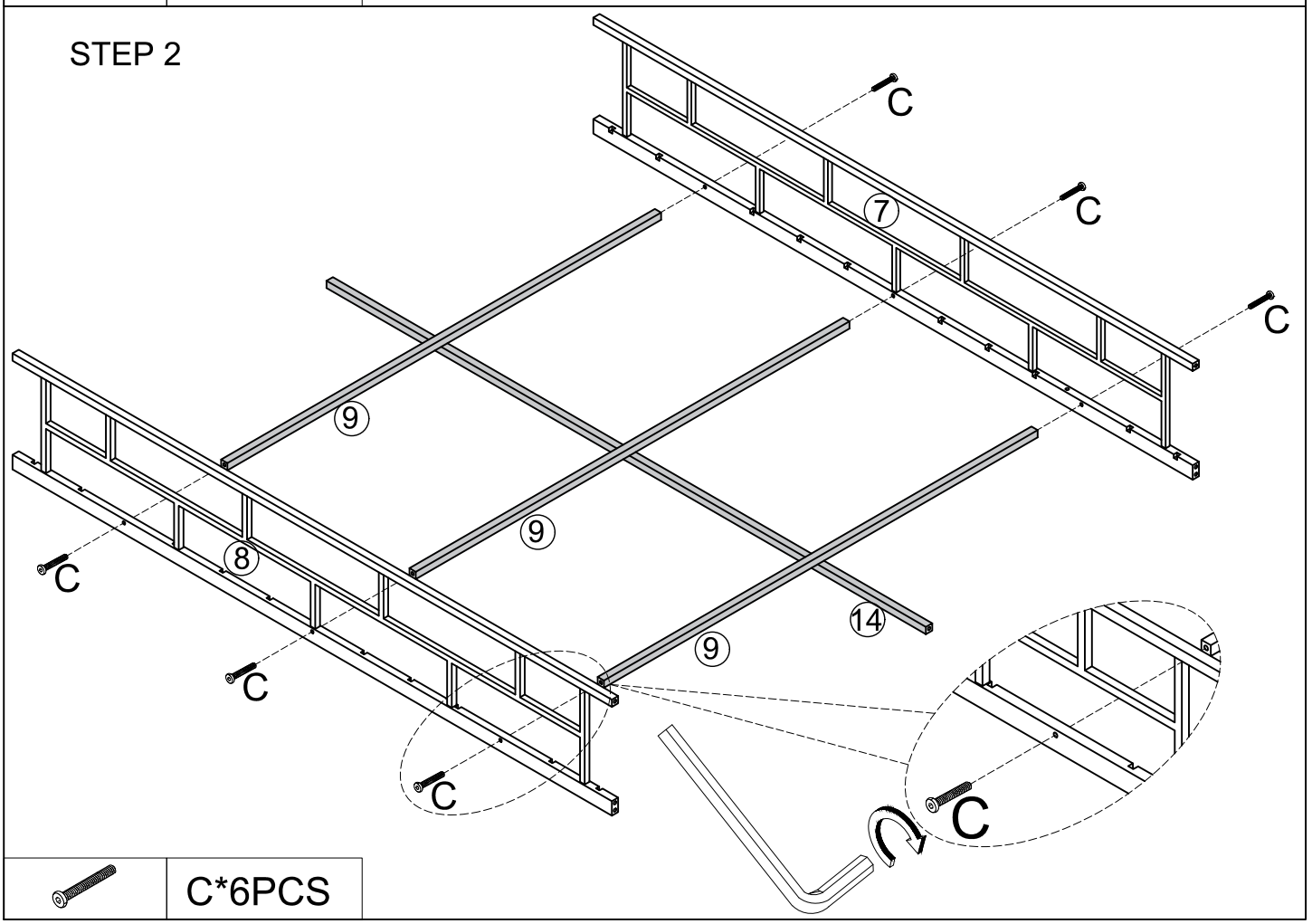

	C*6PCS

For product support or inguiries, please reach out to us at harpaqservice@gmail.com

Assembly Steps / Montageschritte

STEP 3

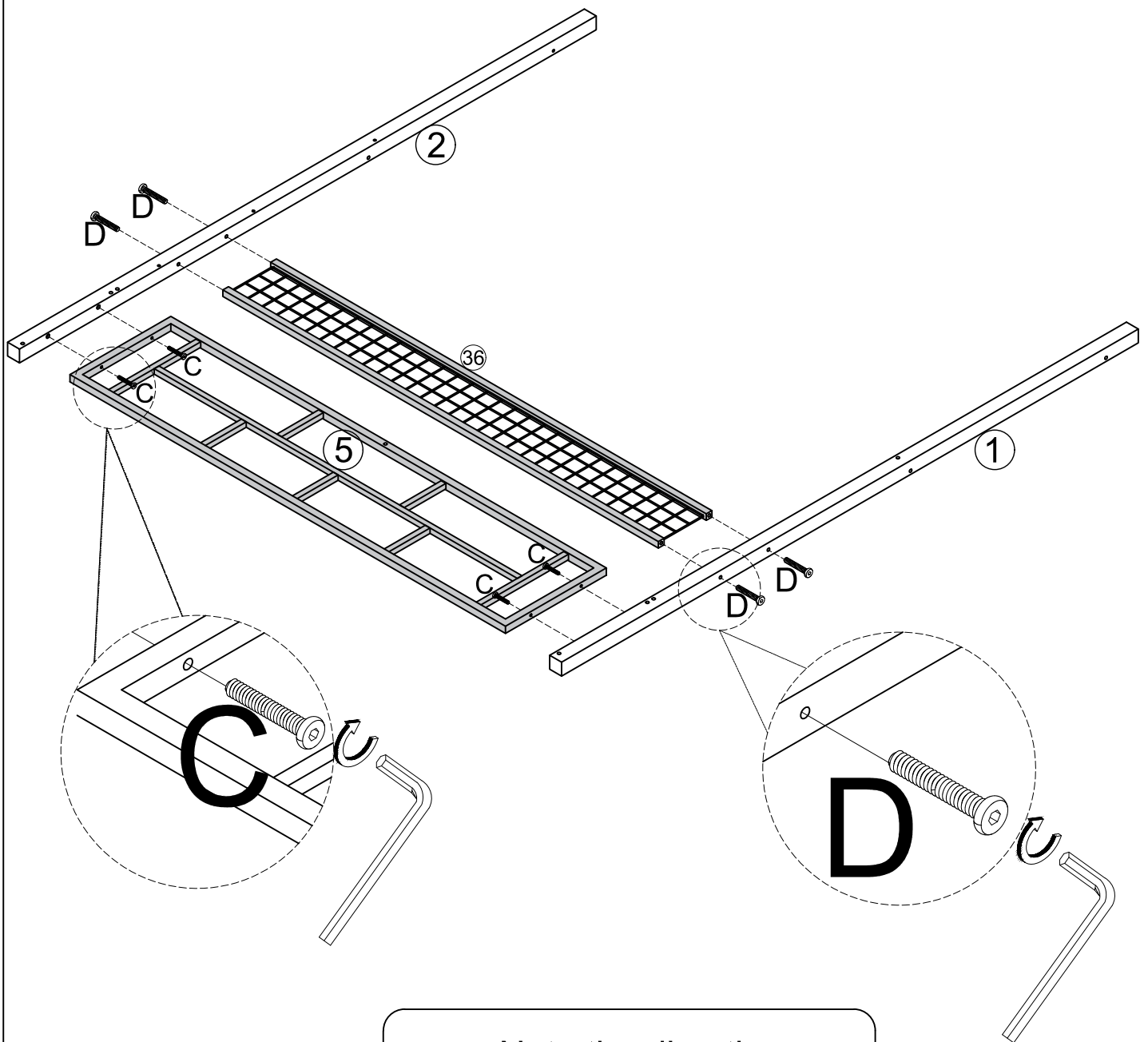

Note the direction of the holes.

	C*4PCS
	D*4PCS

For product support or inguiries, please reach out to us at harpaqservice@gmail.com

Assembly Steps / Montageschritte

STEP 4

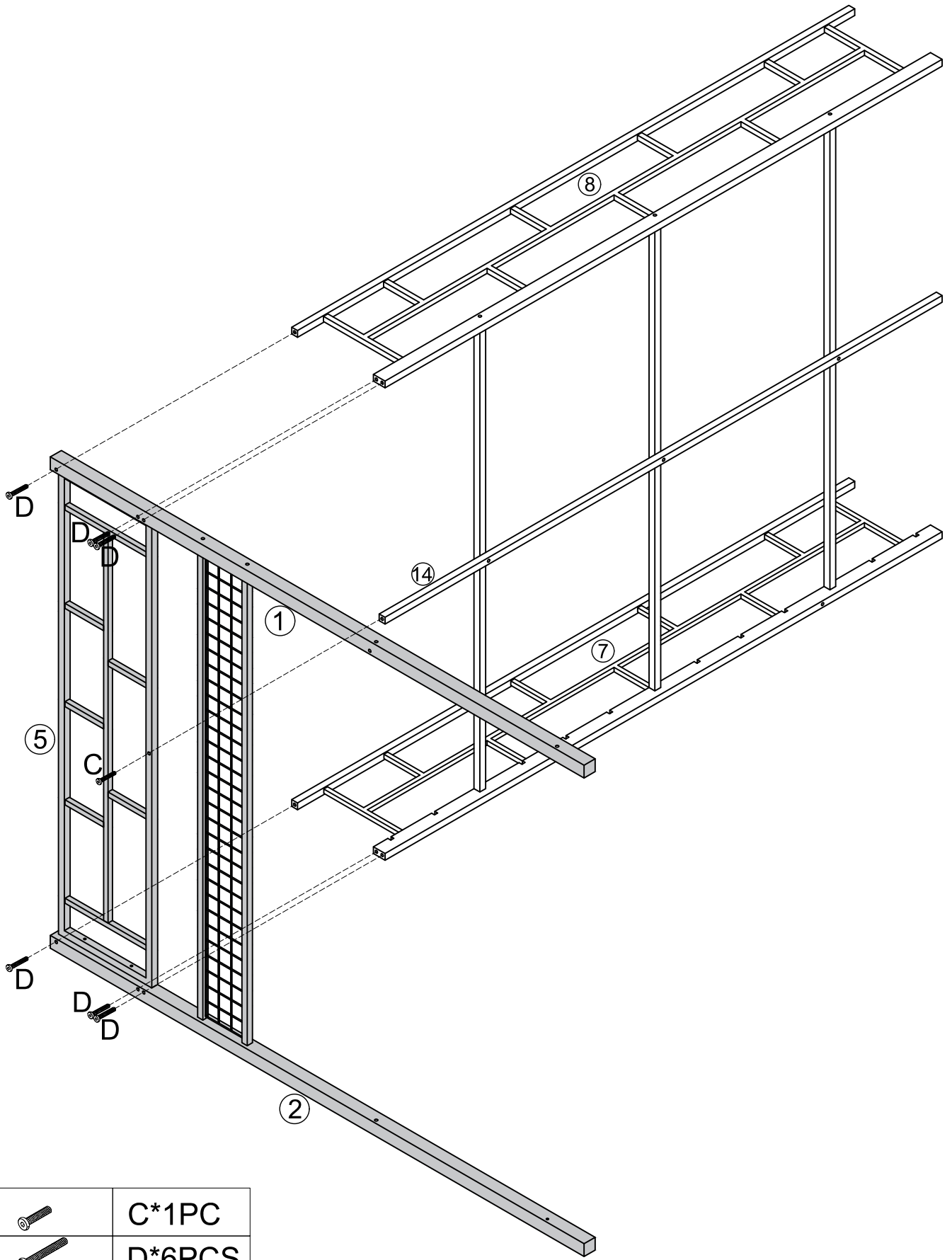

	C*1PC
	D*6PCS

For product support or inguiries, please reach out to us at harpaqservice@gmail.com

Assembly Steps / Montageschritte

STEP 5

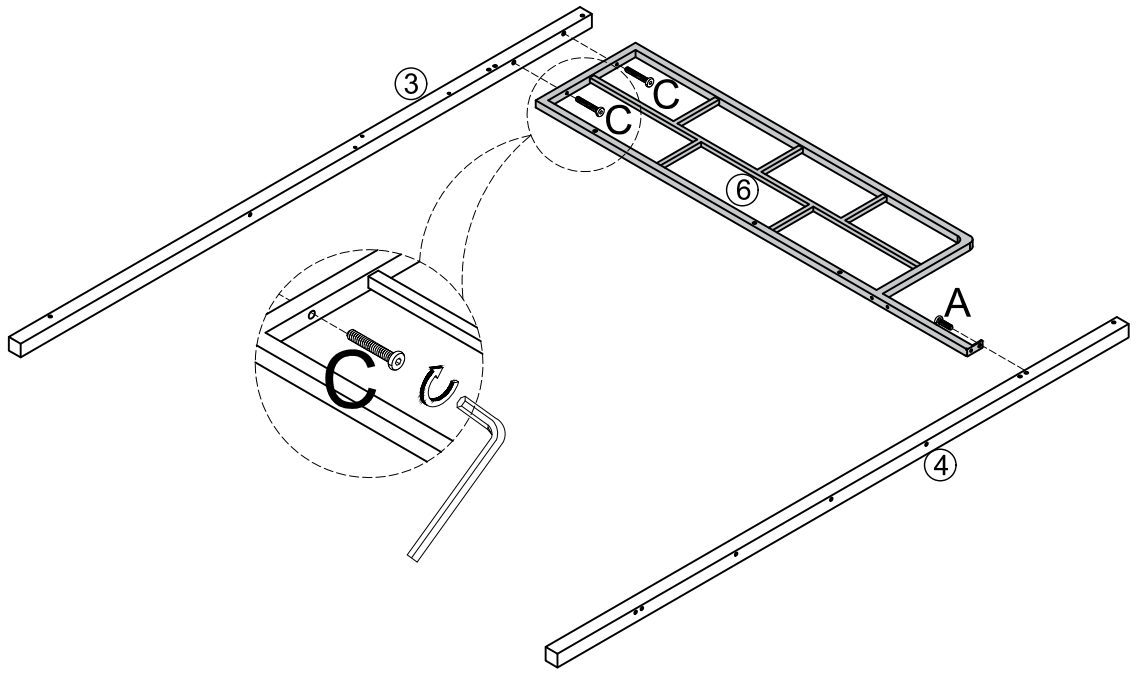

Note the direction of the holes.

	A*1PCS
	C*2PCS

STEP 6

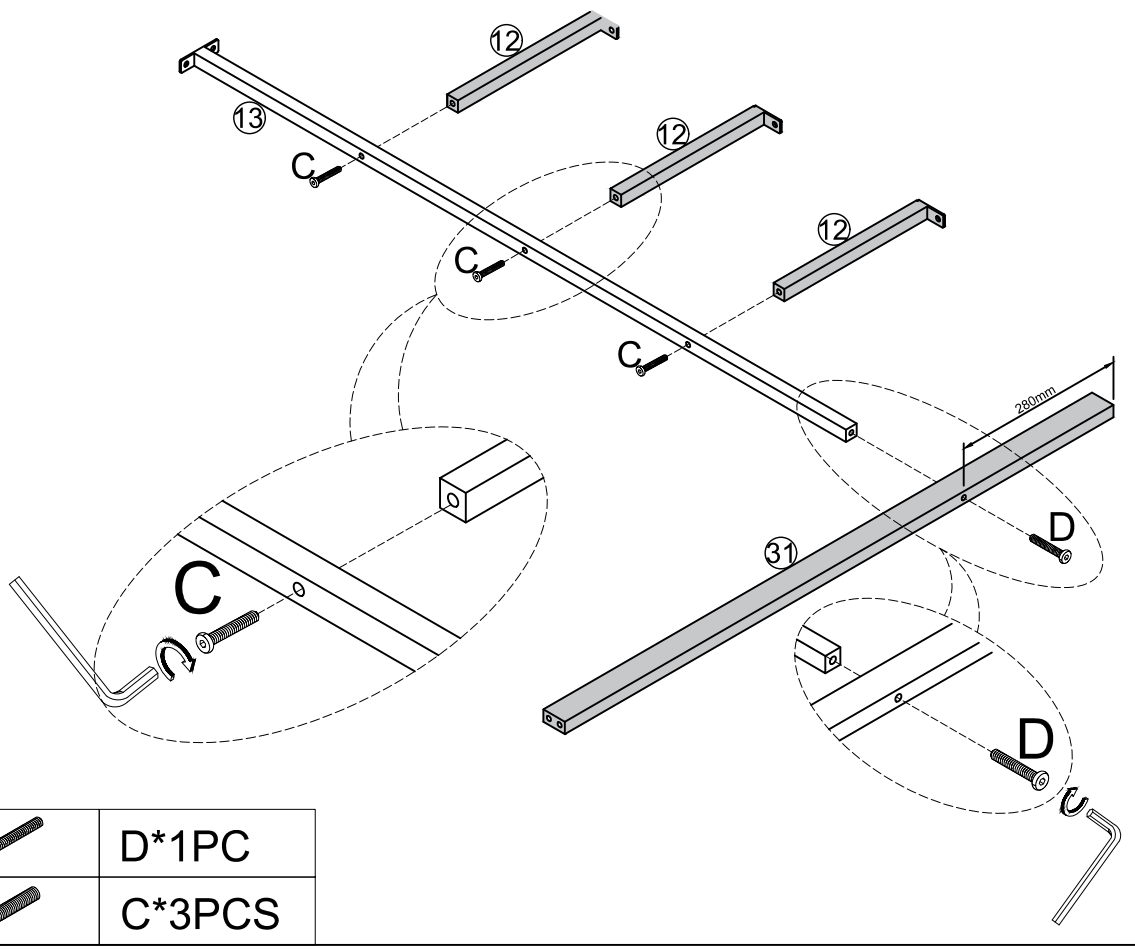

	D*1PC
	C*3PCS

For product support or inguiries, please reach out to us at harpaqservice@gmail.com

Assembly Steps / Montageschritte

STEP 7

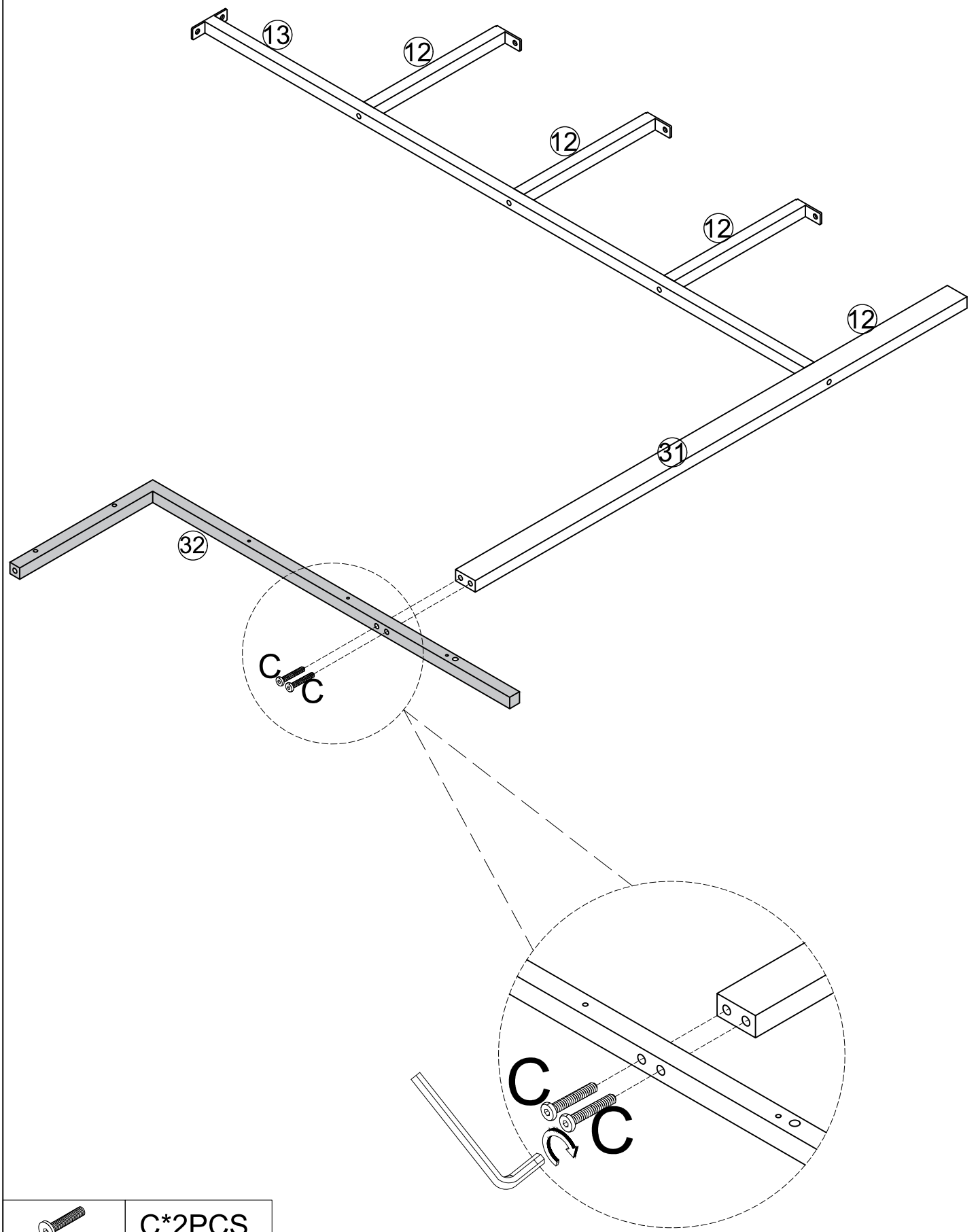

	C*2PCS

For product support or inguiries, please reach out to us at harpaqservice@gmail.com

Assembly Steps / Montageschritte

STEP 8

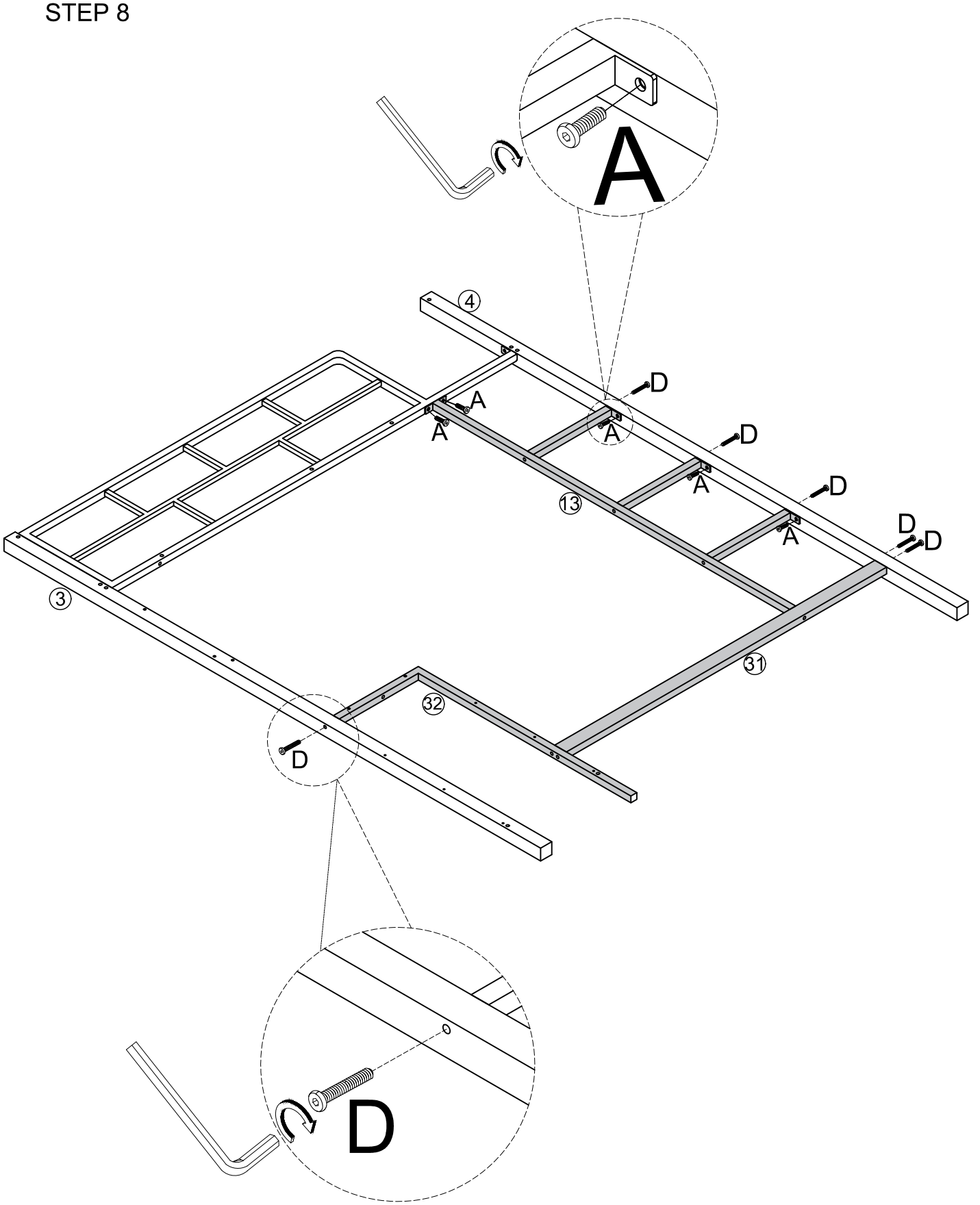

	A*5PCS
	D*6PCS

For product support or inguiries, please reach out to us at harpaqservice@gmail.com

Assembly Steps / Montageschritte

STEP 9

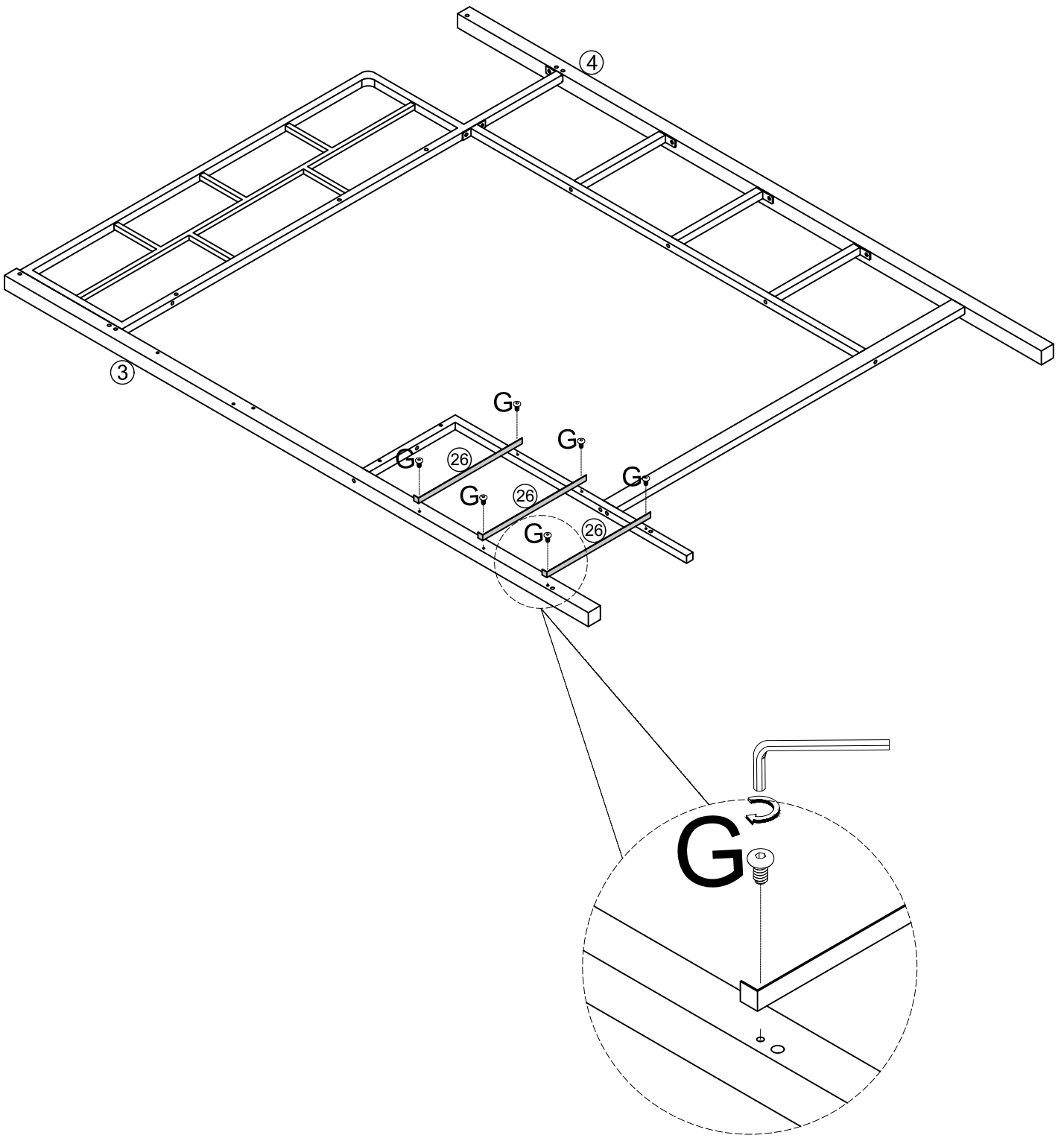

	G*6PCS

For product support or inguiries, please reach out to us at harpaqservice@gmail.com

Assembly Steps / Montageschritte

STEP 10

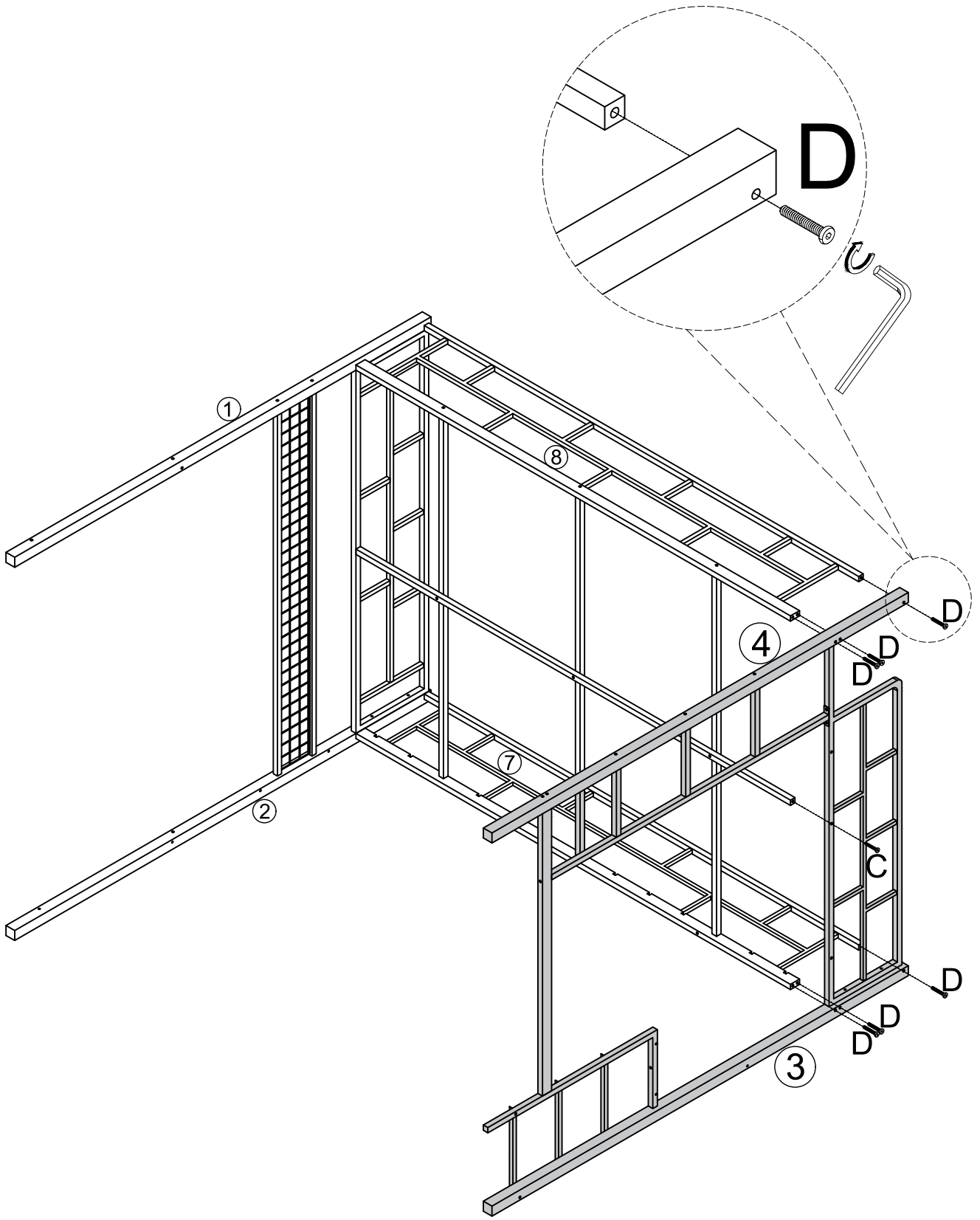

	D*6PC
	C*1PCS

For product support or inguiries, please reach out to us at harpaqservice@gmail.com

STEP 11

⚠ ATTENTION

- Remove the sticker, then press and paste the LED(H1) strip on the fixed position.

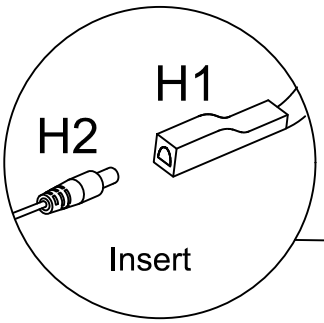

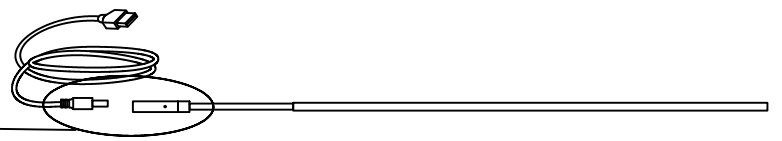

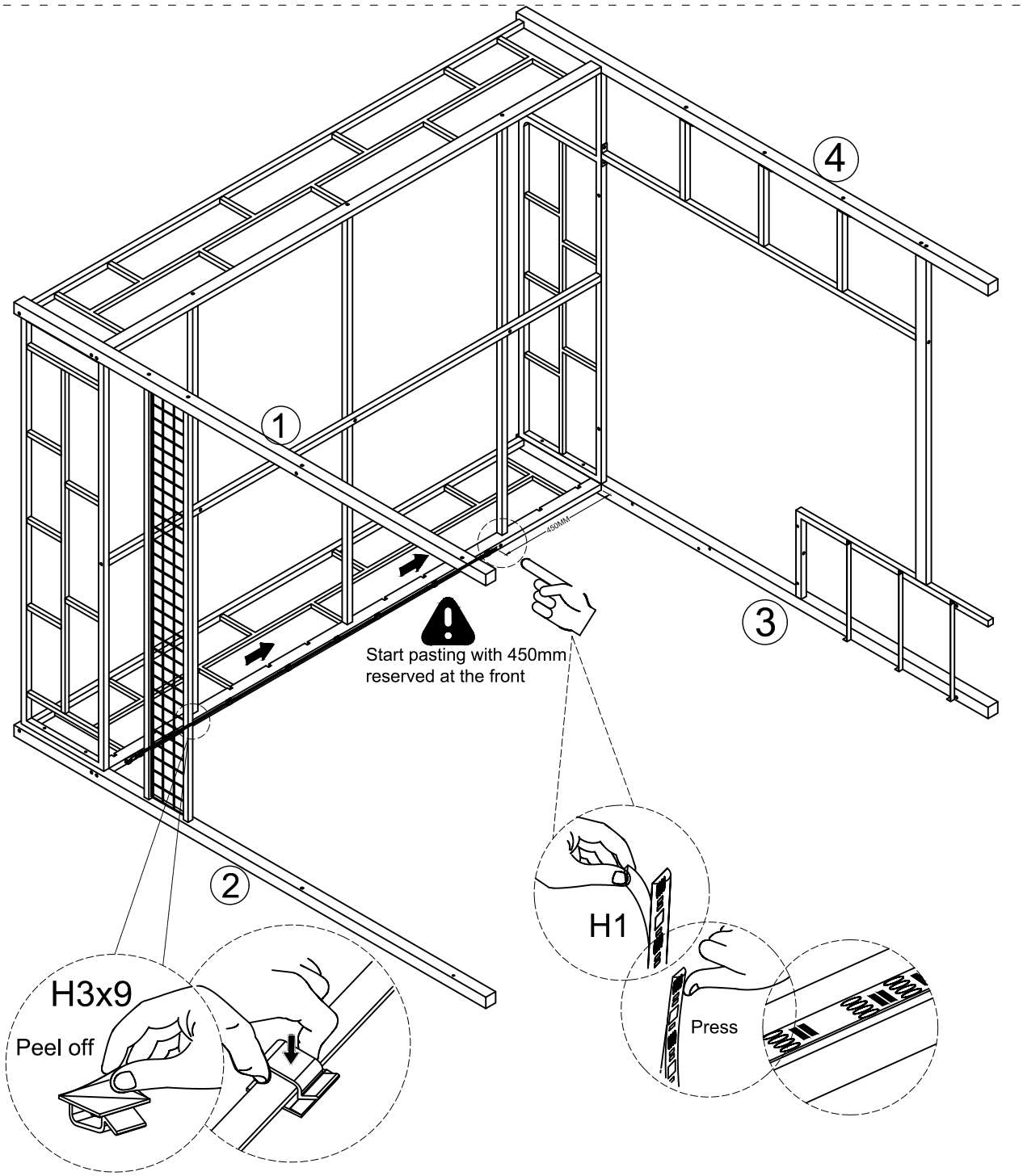

	H*1PC

For product support or inguiries, please reach out to us at harpaqservice@gmail.com

STEP 12

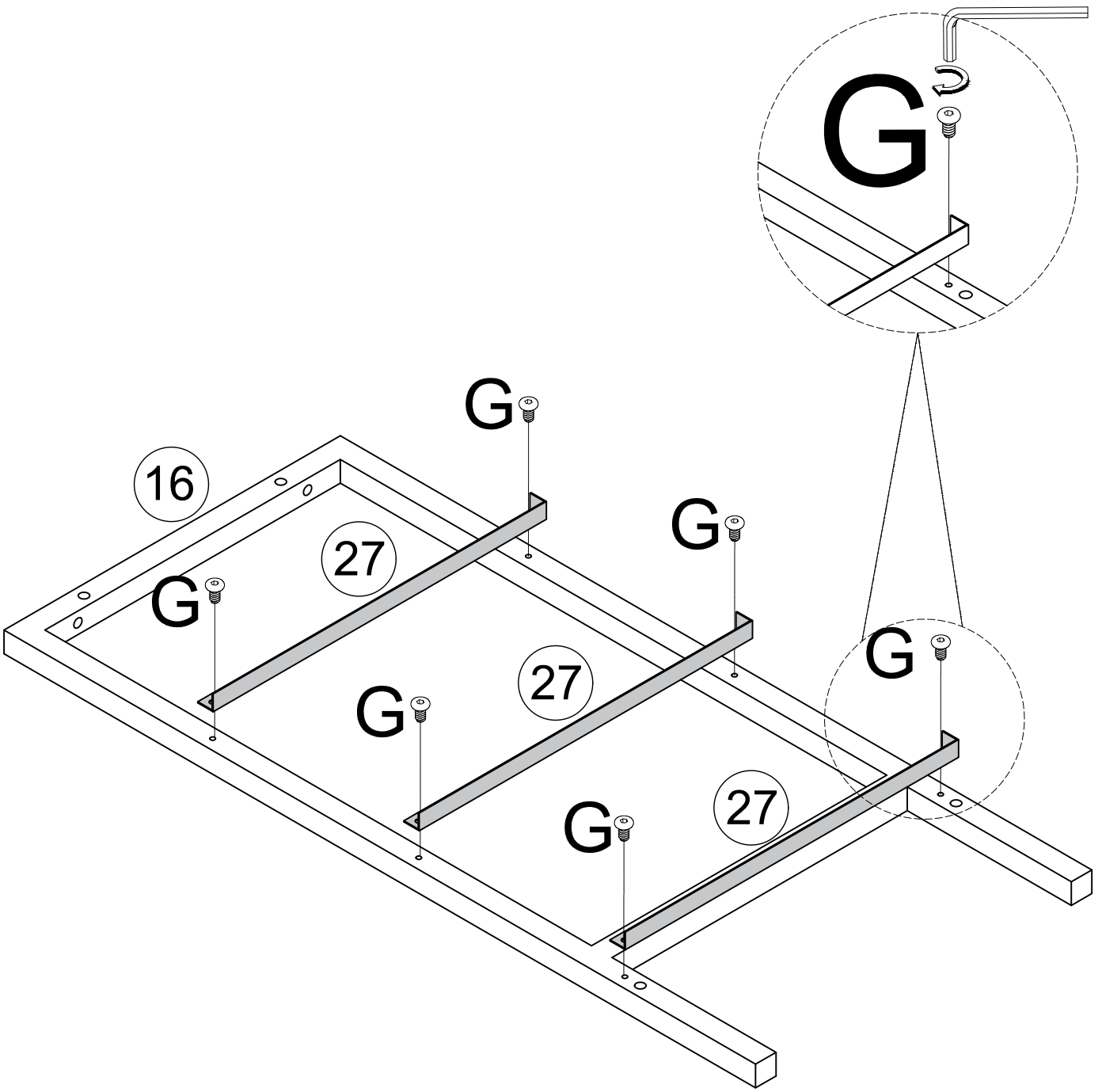

	G*6PCS

For product support or inguiries, please reach out to us at harpaqservice@gmail.com

Assembly Steps / Montageschritte

STEP 13

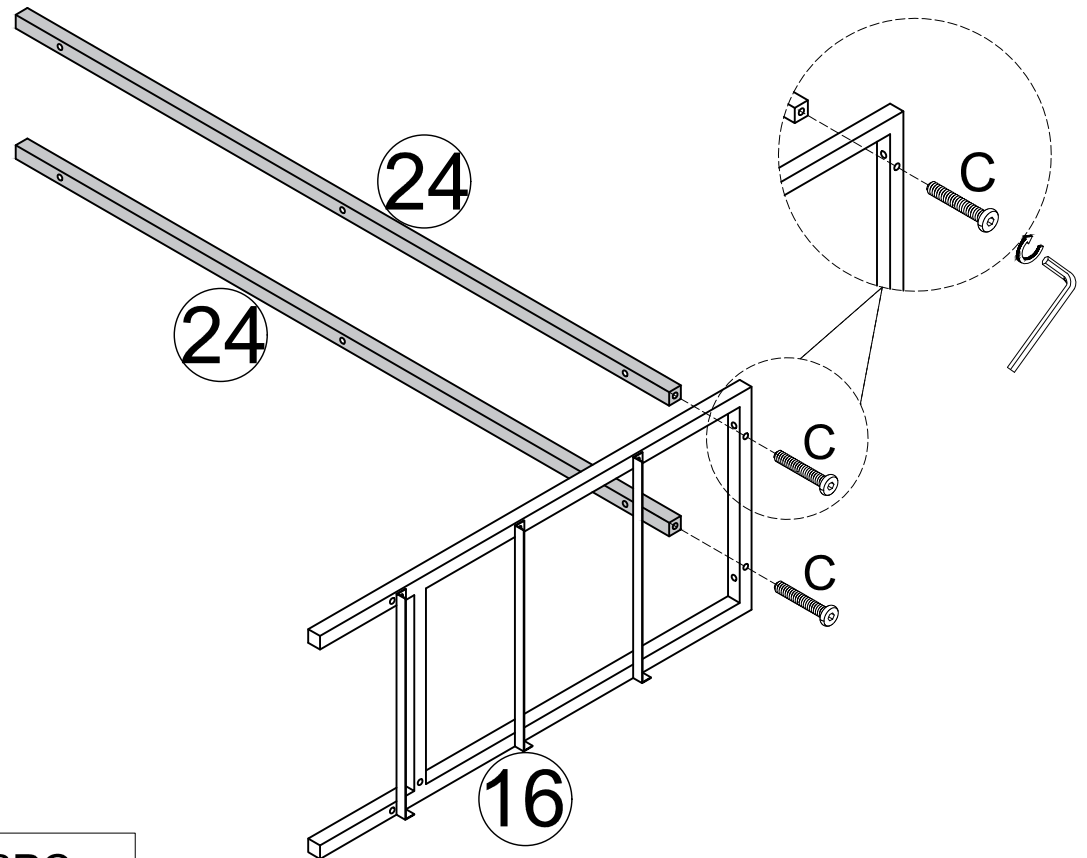

	C*2PC

STEP 14

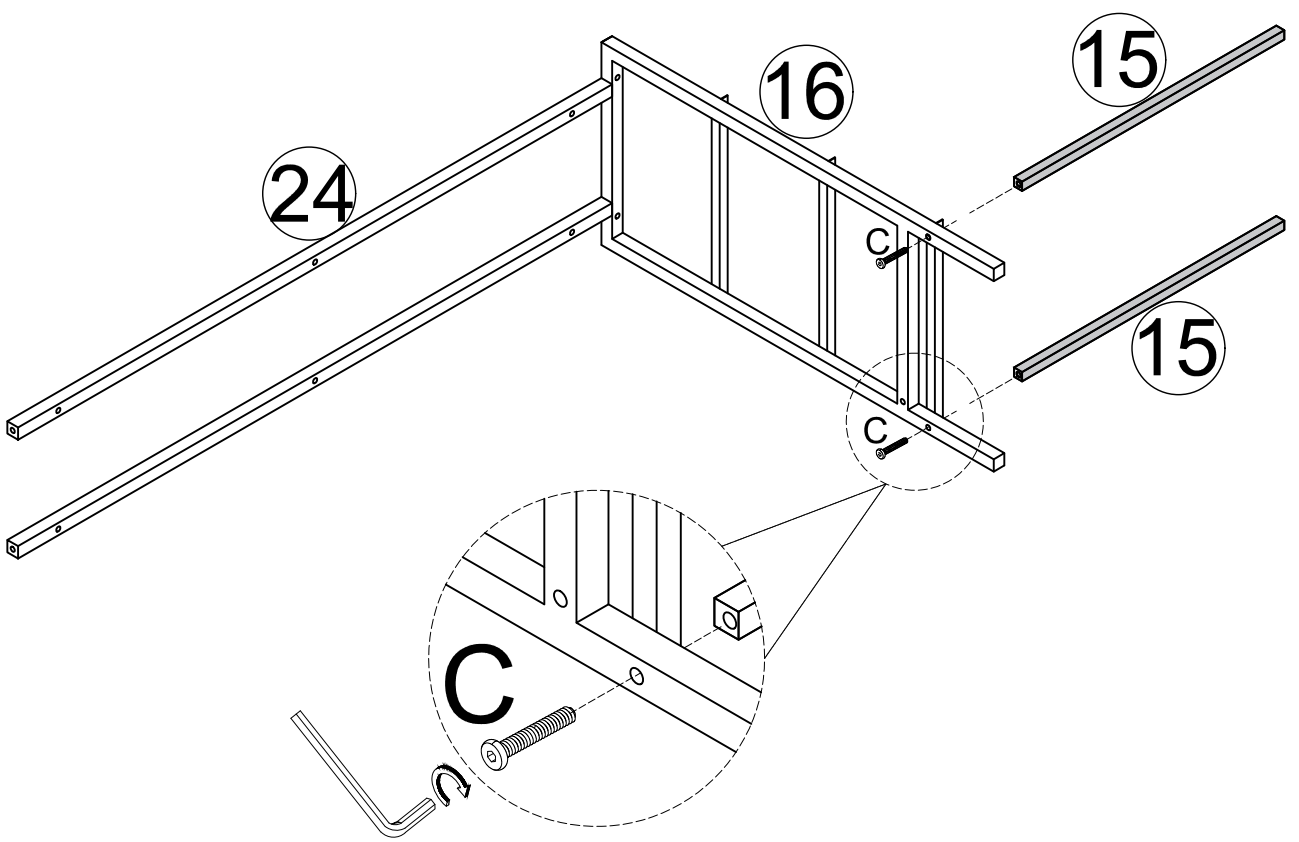

	C*2PCS

For product support or inguiries, please reach out to us at harpaqservice@gmail.com

STEP 15

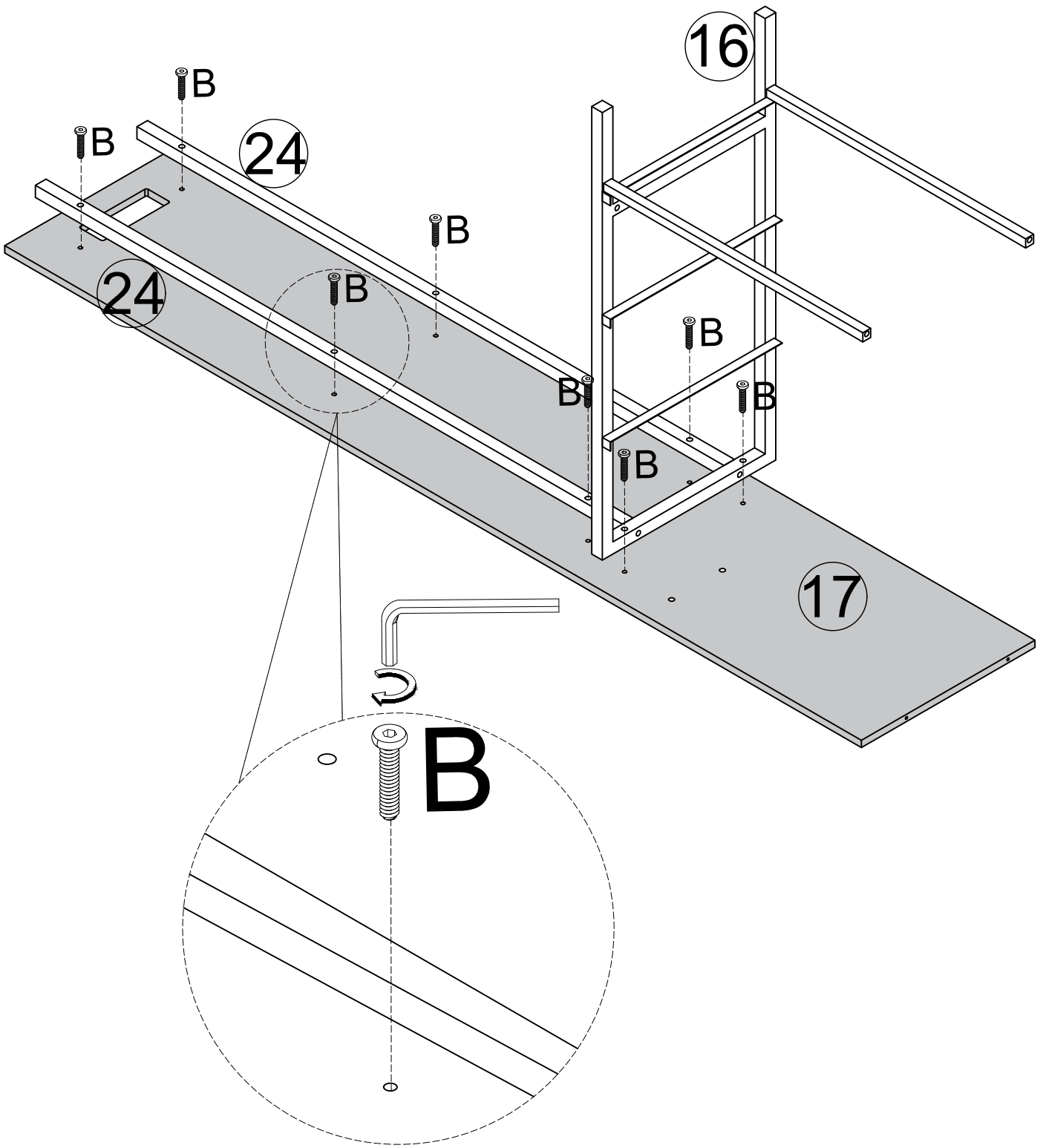

	B*8PCS

For product support or inguiries, please reach out to us at harpaqservice@gmail.com

Assembly Steps / Montageschritte

STEP 16

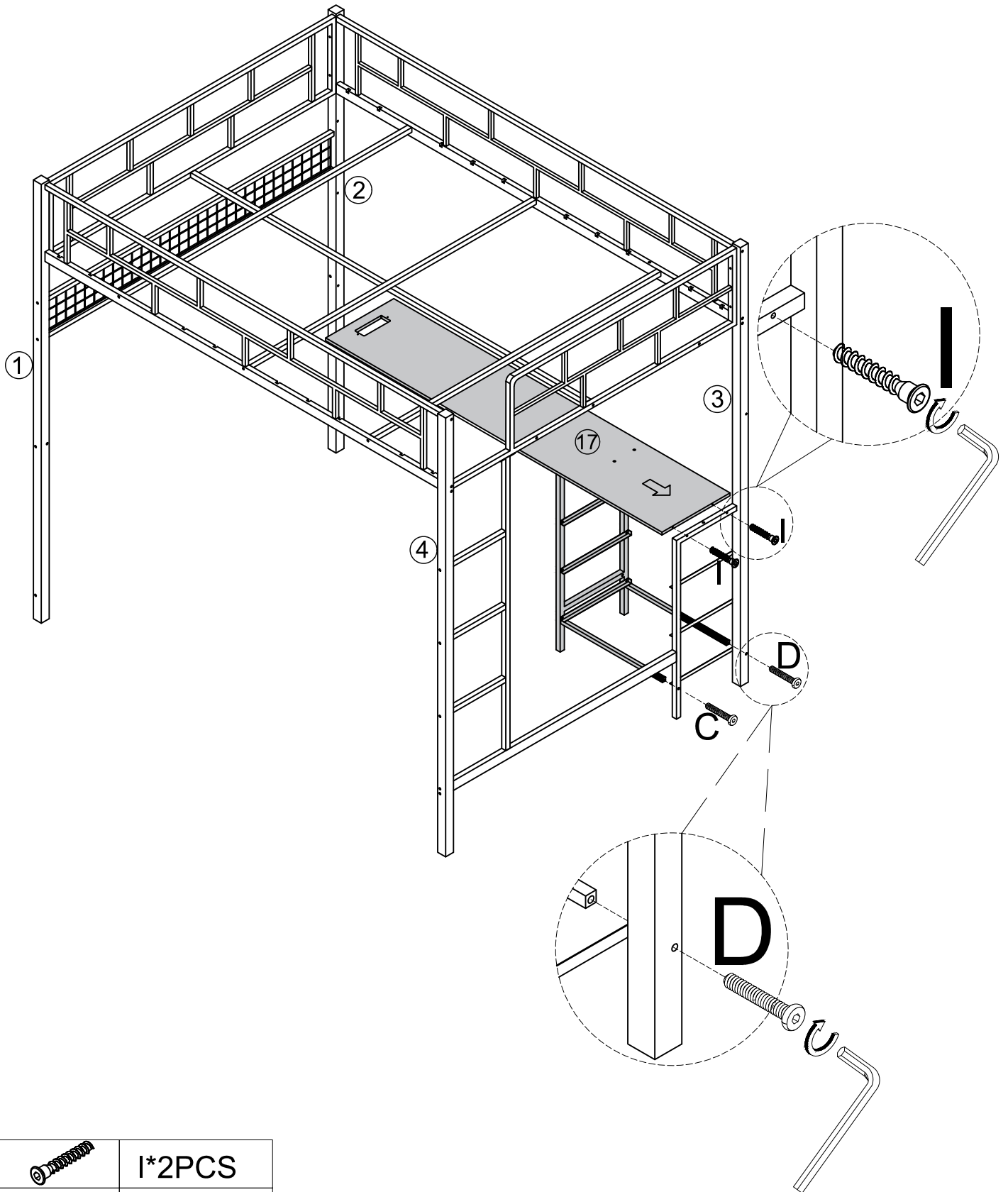

	I*2PCS
	C*1PC
	D*1PC

For product support or inguiries, please reach out to us at harpaqservice@gmail.com

Assembly Steps / Montageschritte

STEP 17

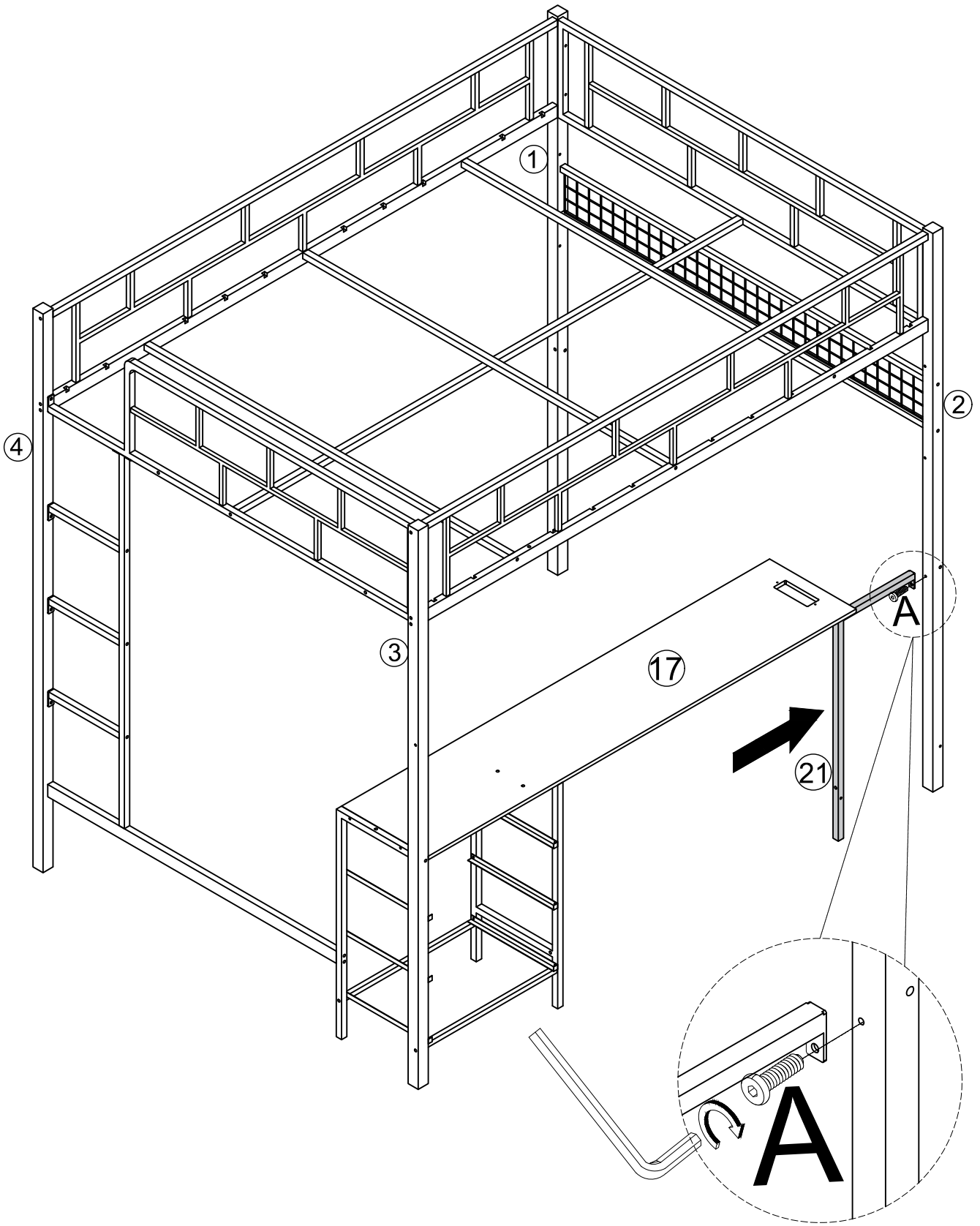

	A*1PCS

For product support or inguiries, please reach out to us at harpaqservice@gmail.com

Assembly Steps / Montageschritte

STEP 18

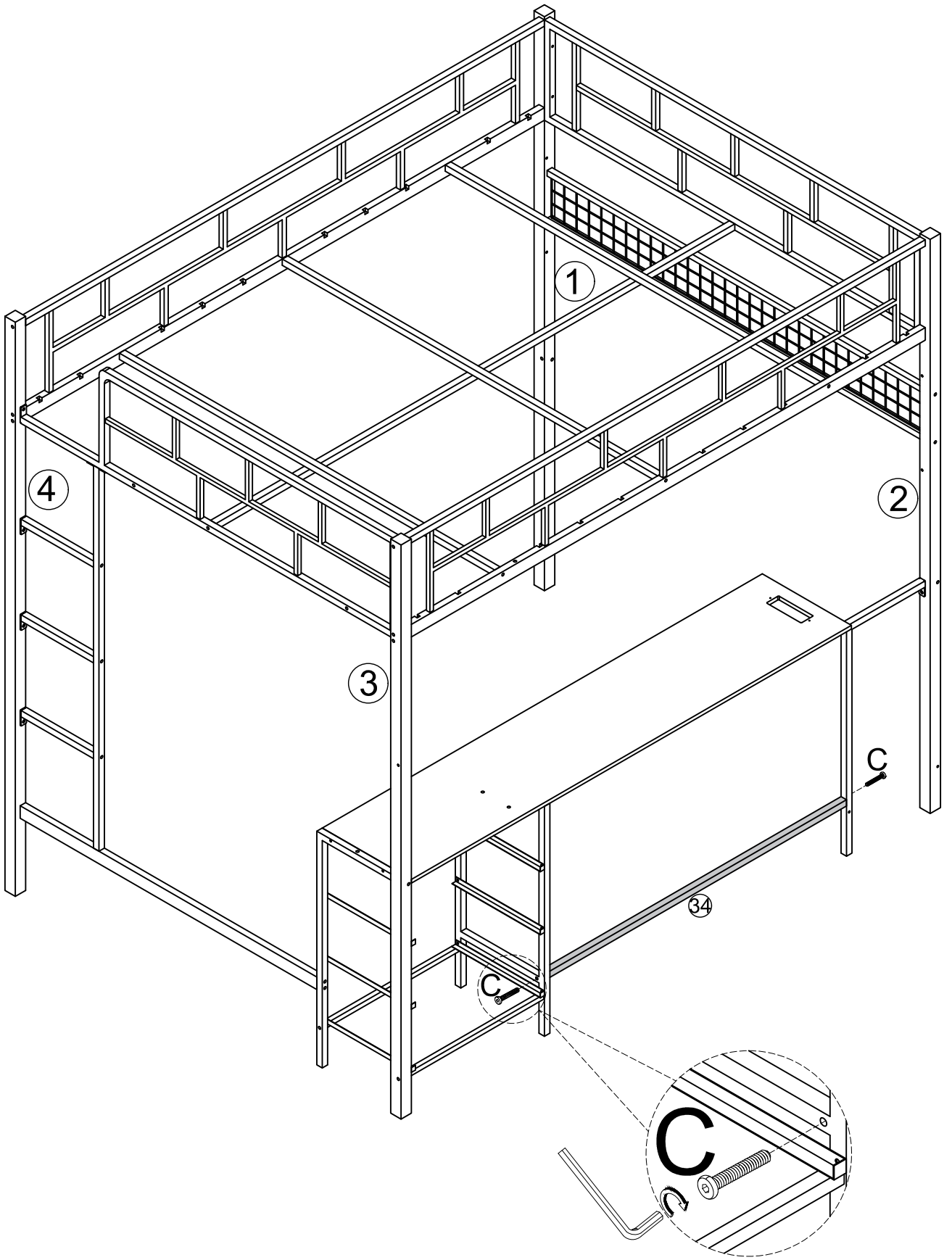

	C*2PC

For product support or inguiries, please reach out to us at harpaqservice@gmail.com

Assembly Steps / Montageschritte

STEP 19

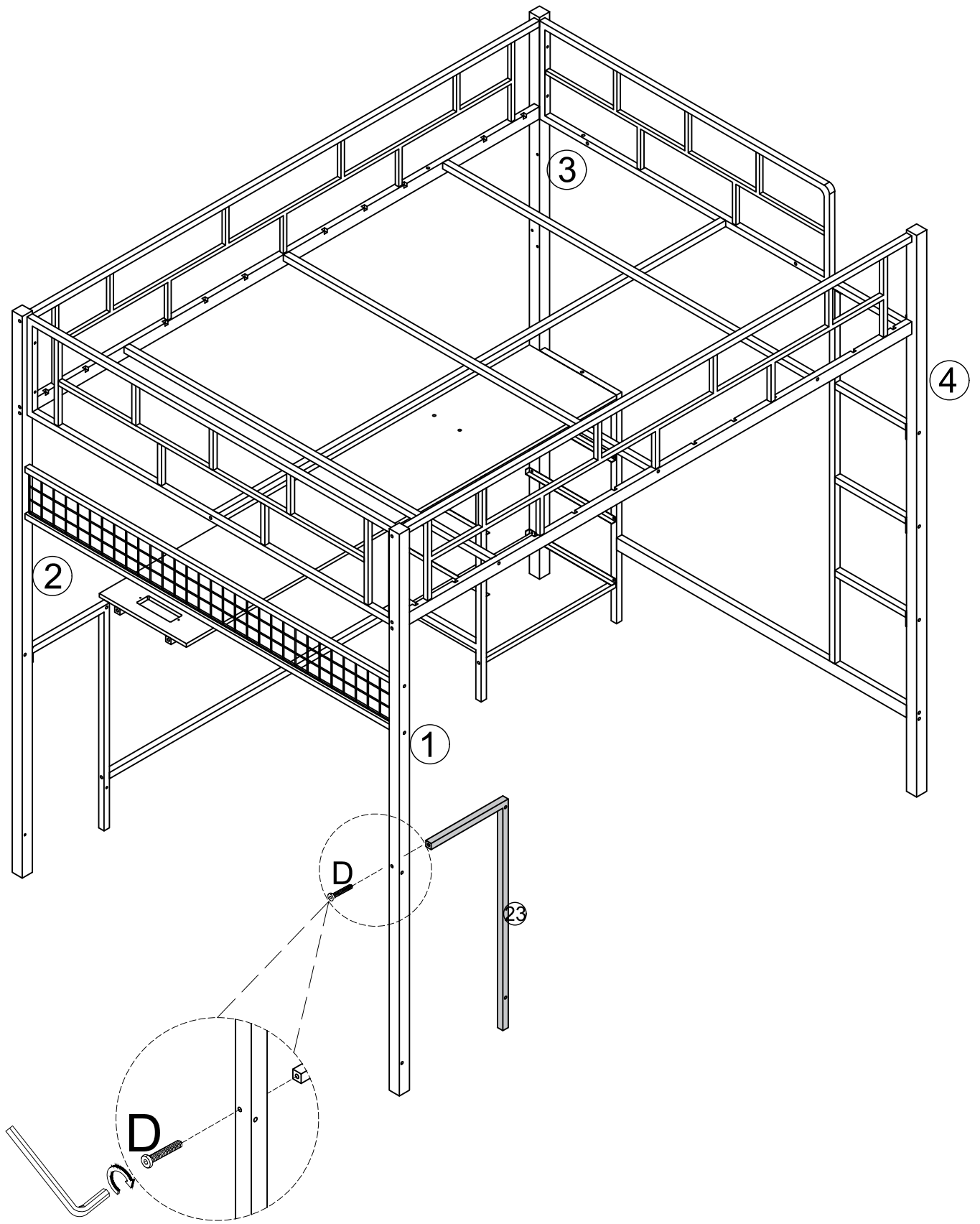

	D*1PC

For product support or inguiries, please reach out to us at harpaqservice@gmail.com

Assembly Steps / Montageschritte

STEP 20

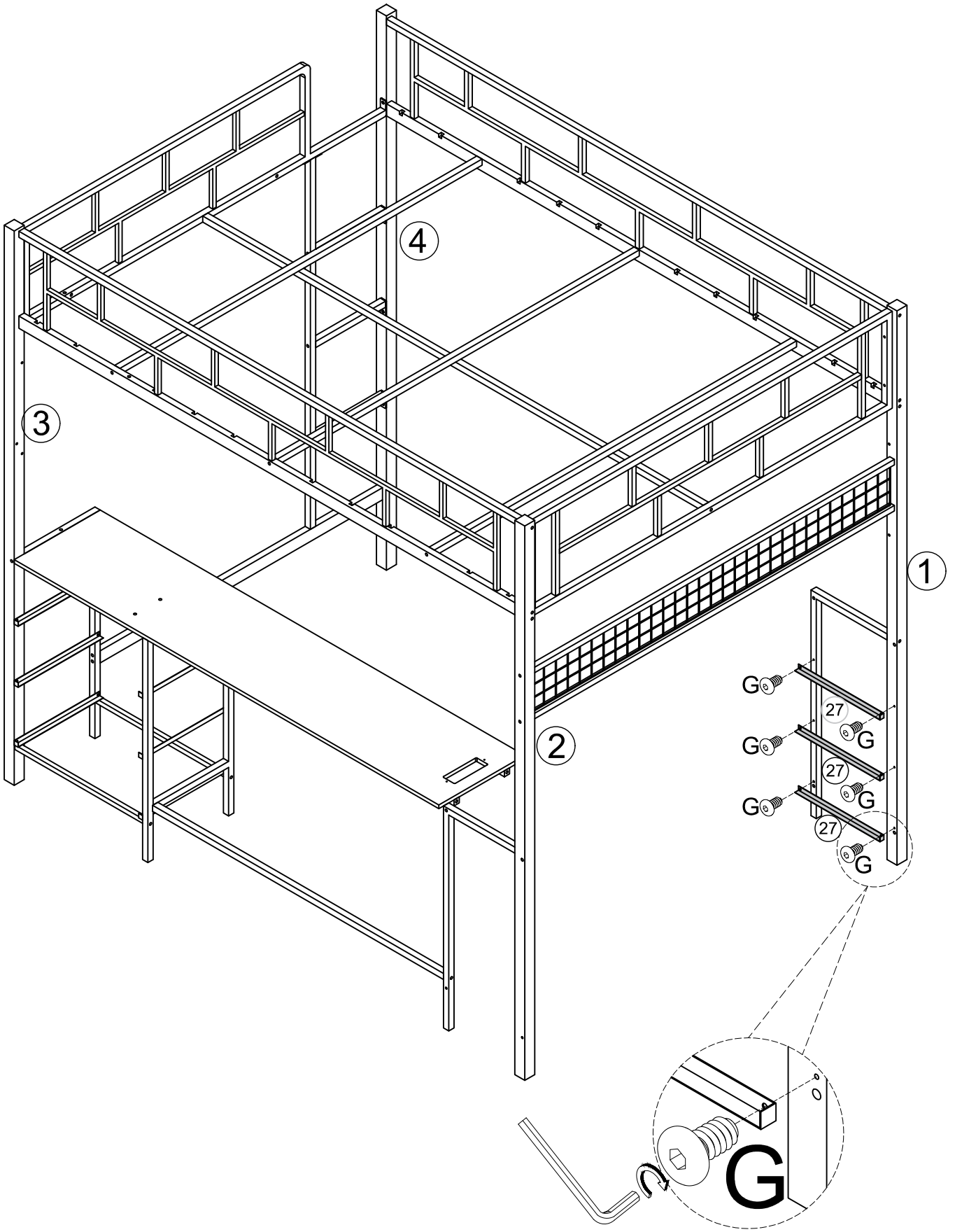

	G*6PCS

For product support or inguiries, please reach out to us at harpaqservice@gmail.com

Assembly Steps / Montageschritte

STEP 21

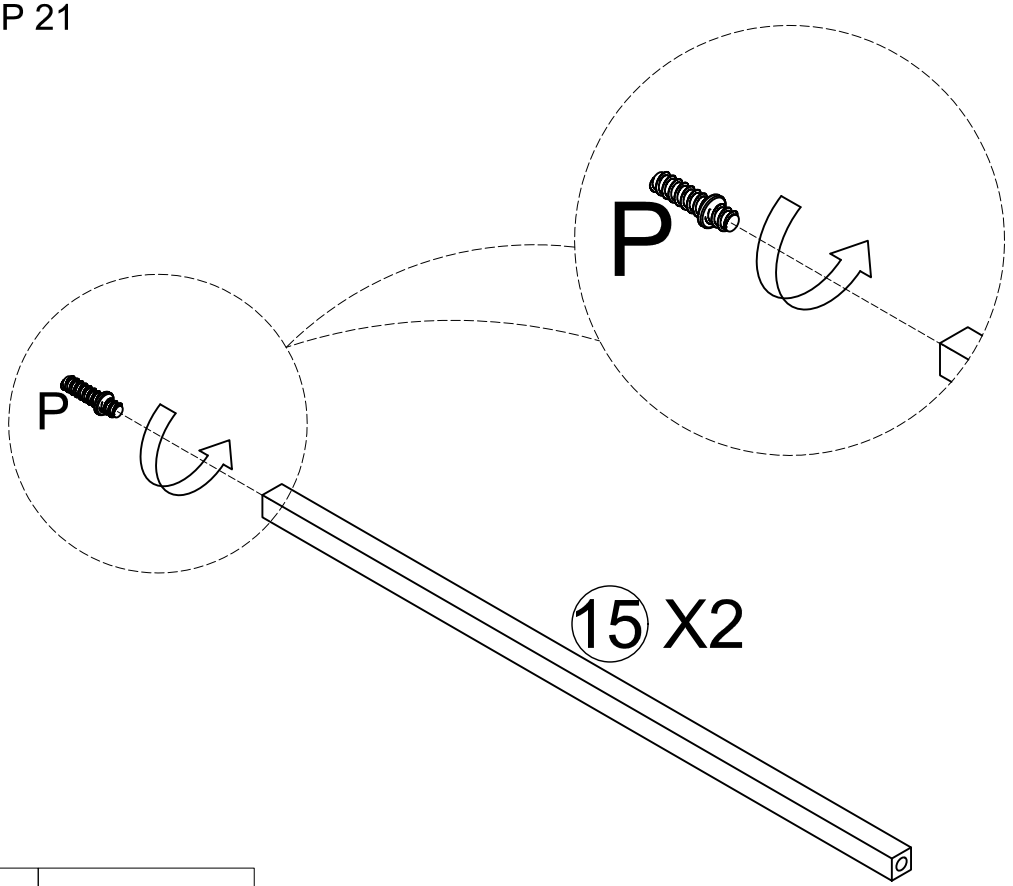

	P*2PCS

STEP 22

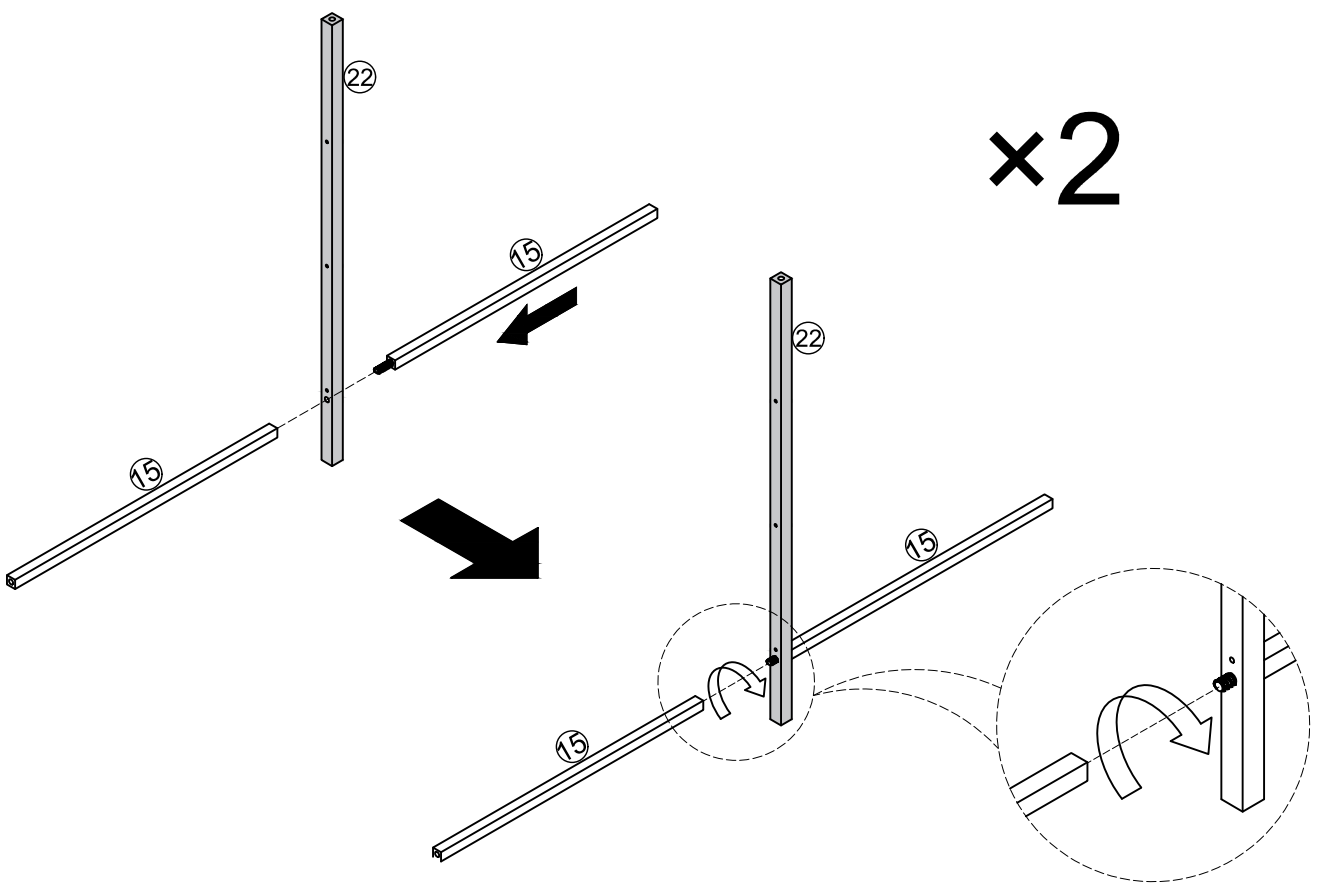

For product support or inguiries, please reach out to us at harpaqservice@gmail.com

Assembly Steps / Montageschritte

STEP 23

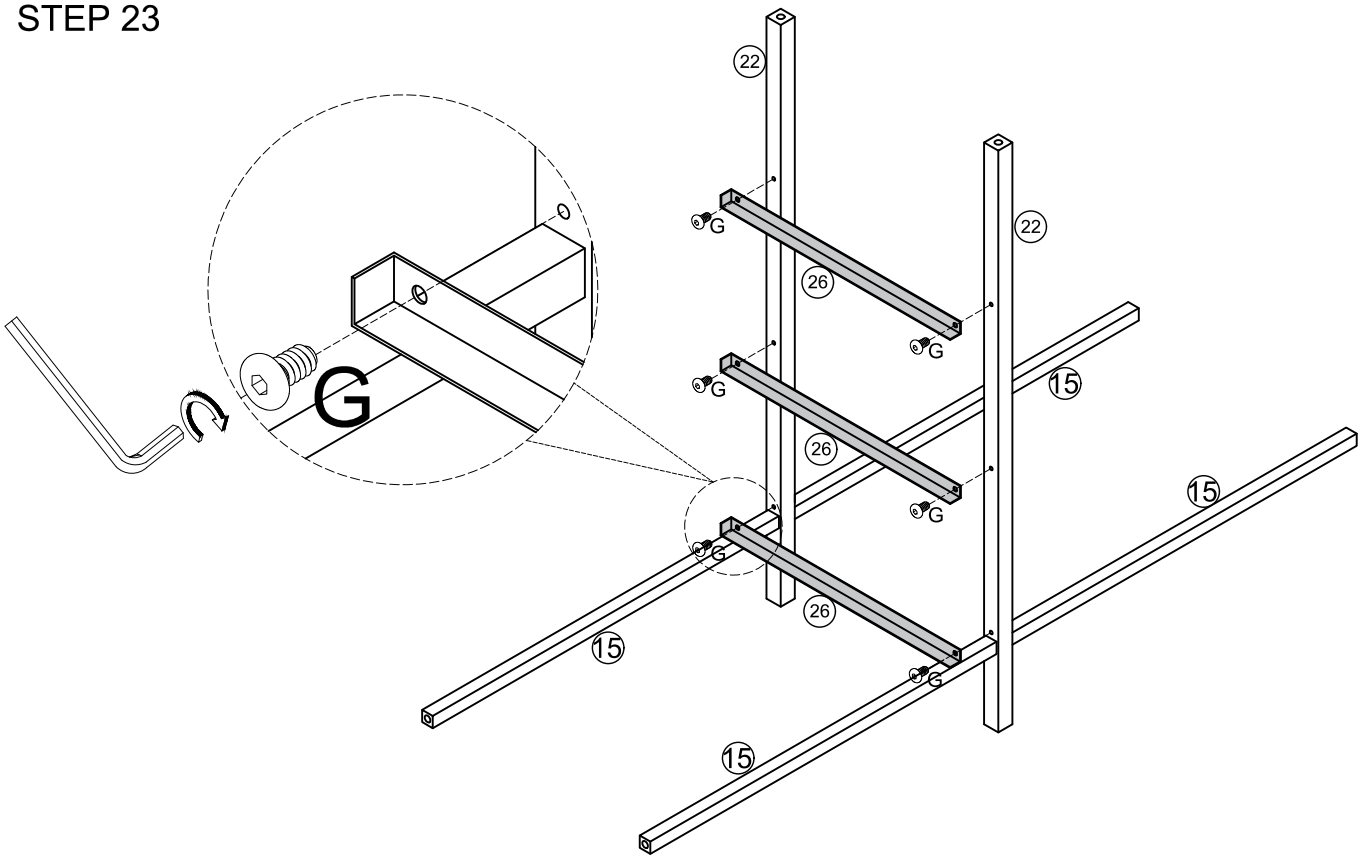

 G*6PCS

STEP 24

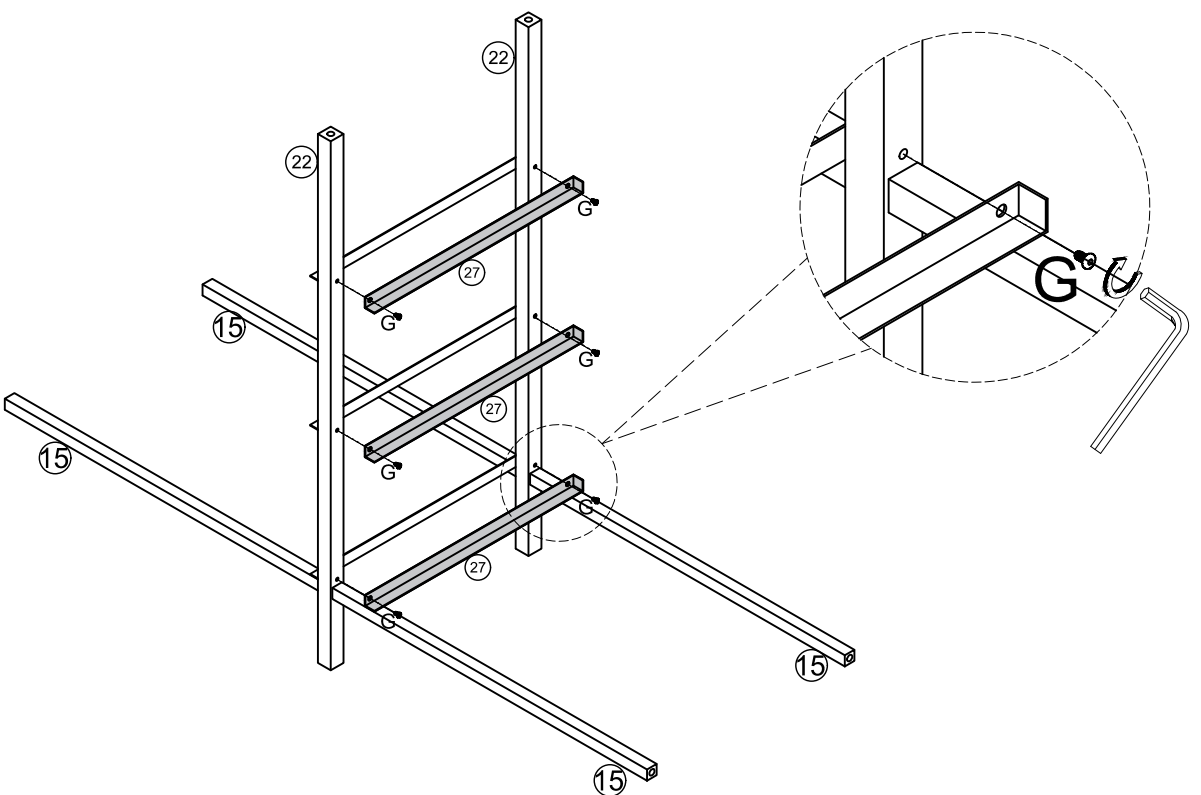

 G*6PCS

For product support or inguiries, please reach out to us at harpaqservice@gmail.com

Assembly Steps / Montageschritte

STEP 25

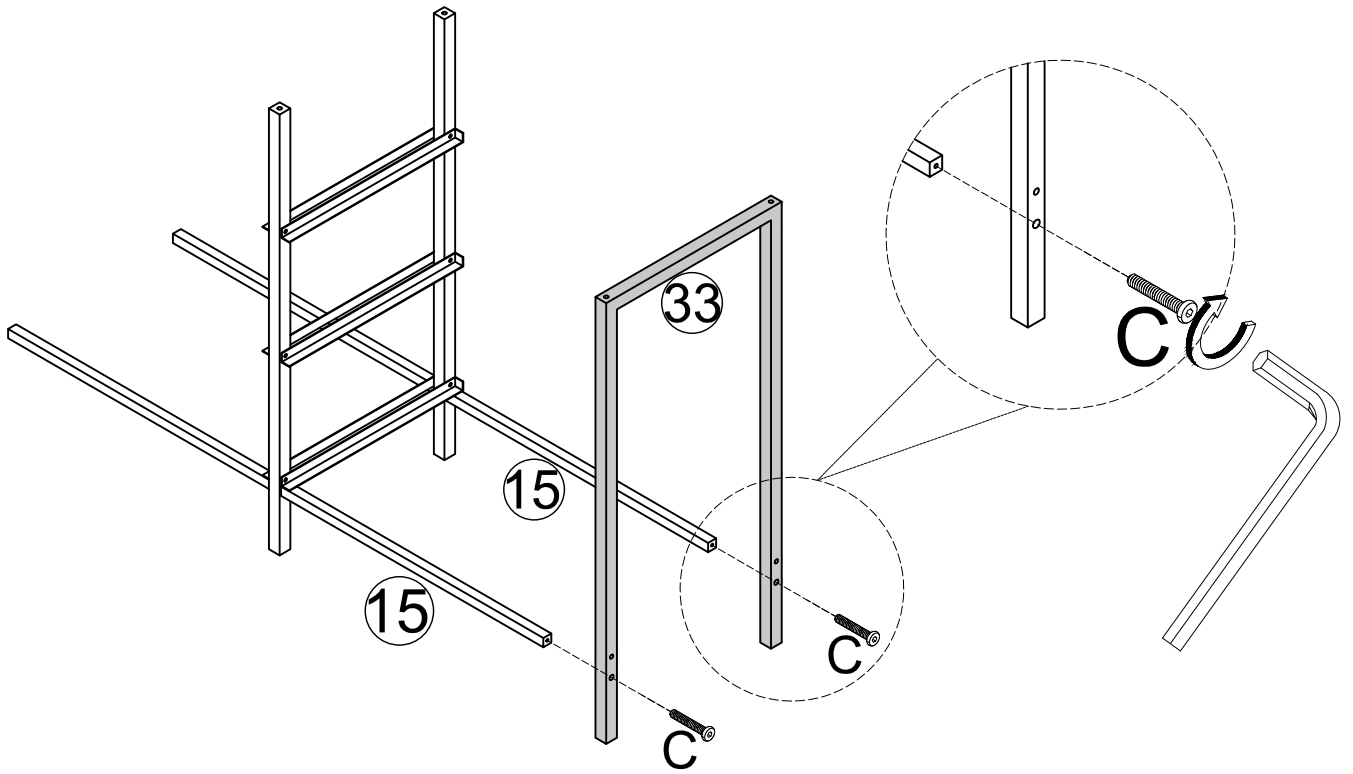

	C*2PC

STEP 26

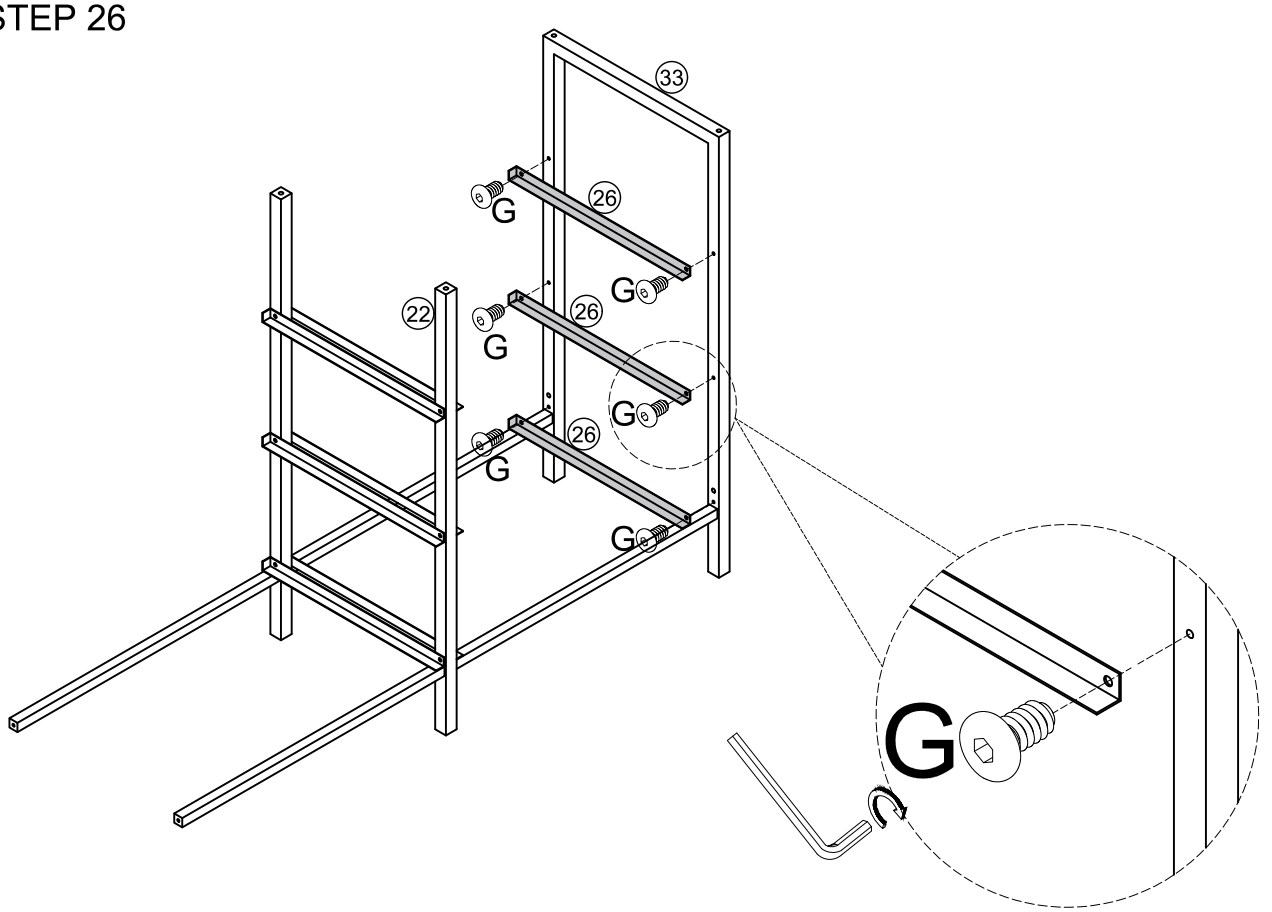

	G*6PCS

For product support or inguiries, please reach out to us at harpaqservice@gmail.com

Assembly Steps / Montageschritte

STEP 27

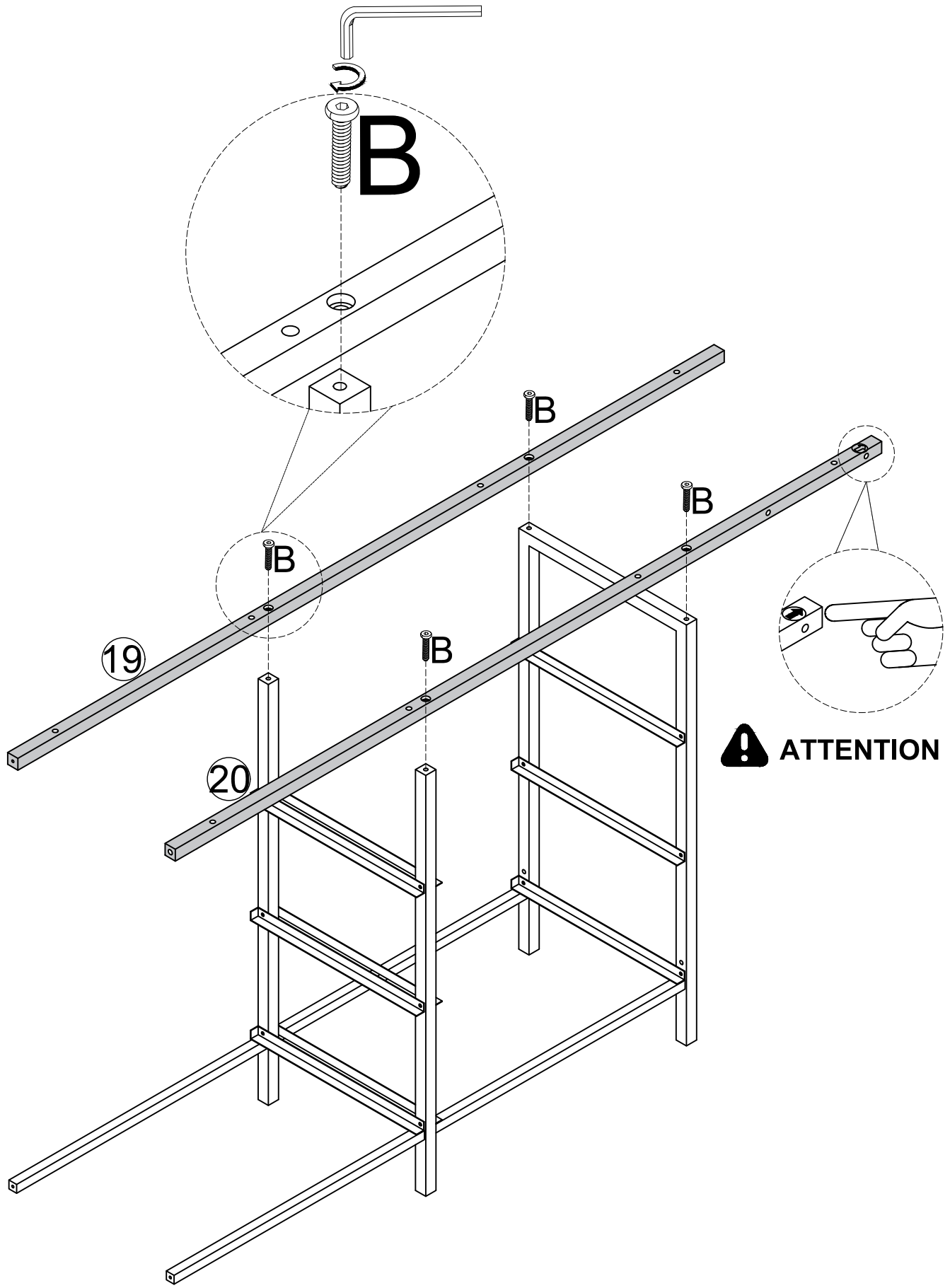

	B*4PCS

For product support or inguiries, please reach out to us at harpaqservice@gmail.com

Assembly Steps / Montageschritte

STEP 28

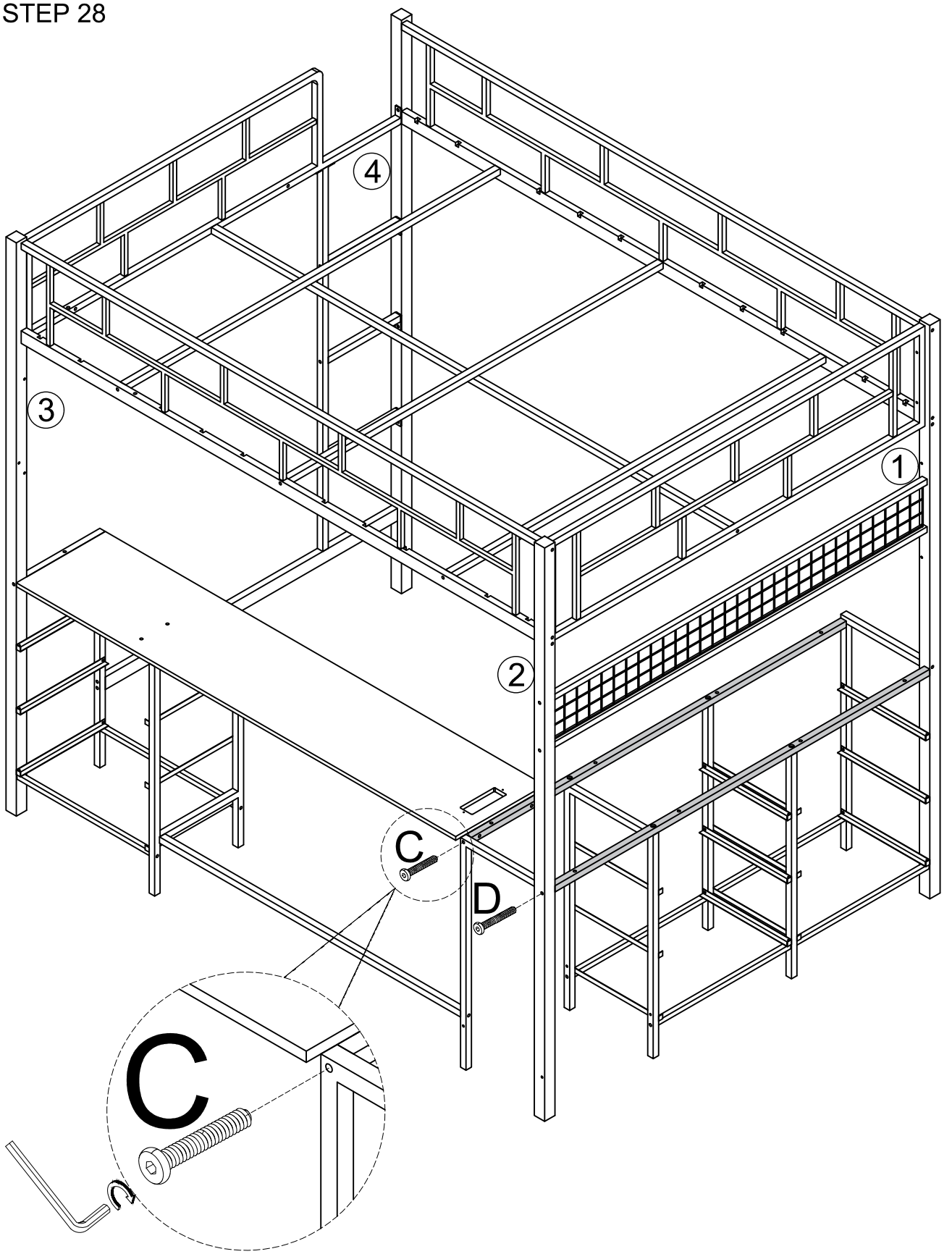

	D*1PC
	C*1PC

For product support or inguiries, please reach out to us at harpaqservice@gmail.com

Assembly Steps / Montageschritte

STEP 29

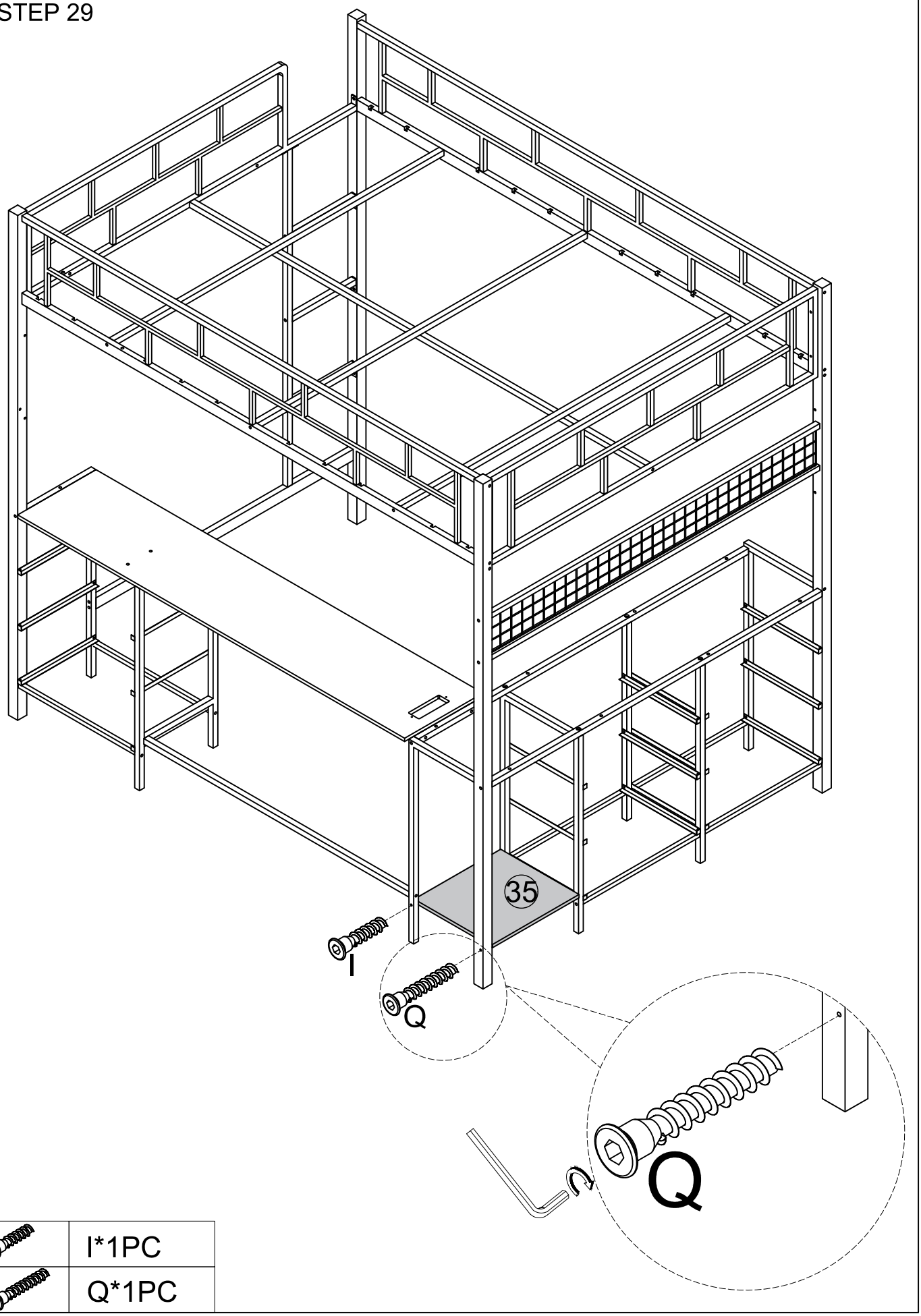

	I*1PC
	Q*1PC

For product support or inguiries, please reach out to us at harpaqservice@gmail.com

Assembly Steps / Montageschritte

STEP 30

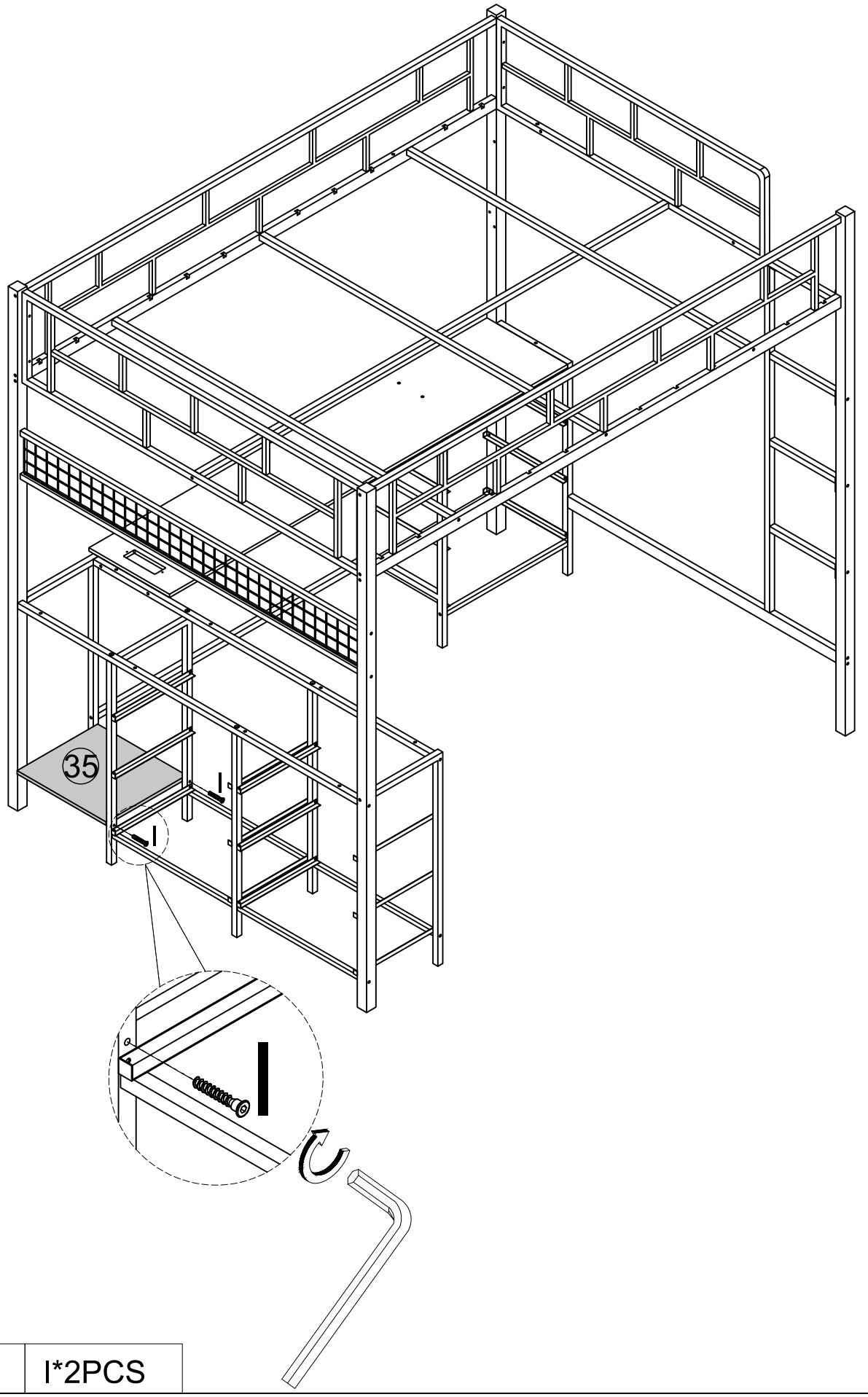

	I*2PCS

For product support or inguiries, please reach out to us at harpaqservice@gmail.com

Assembly Steps / Montageschritte

STEP 31

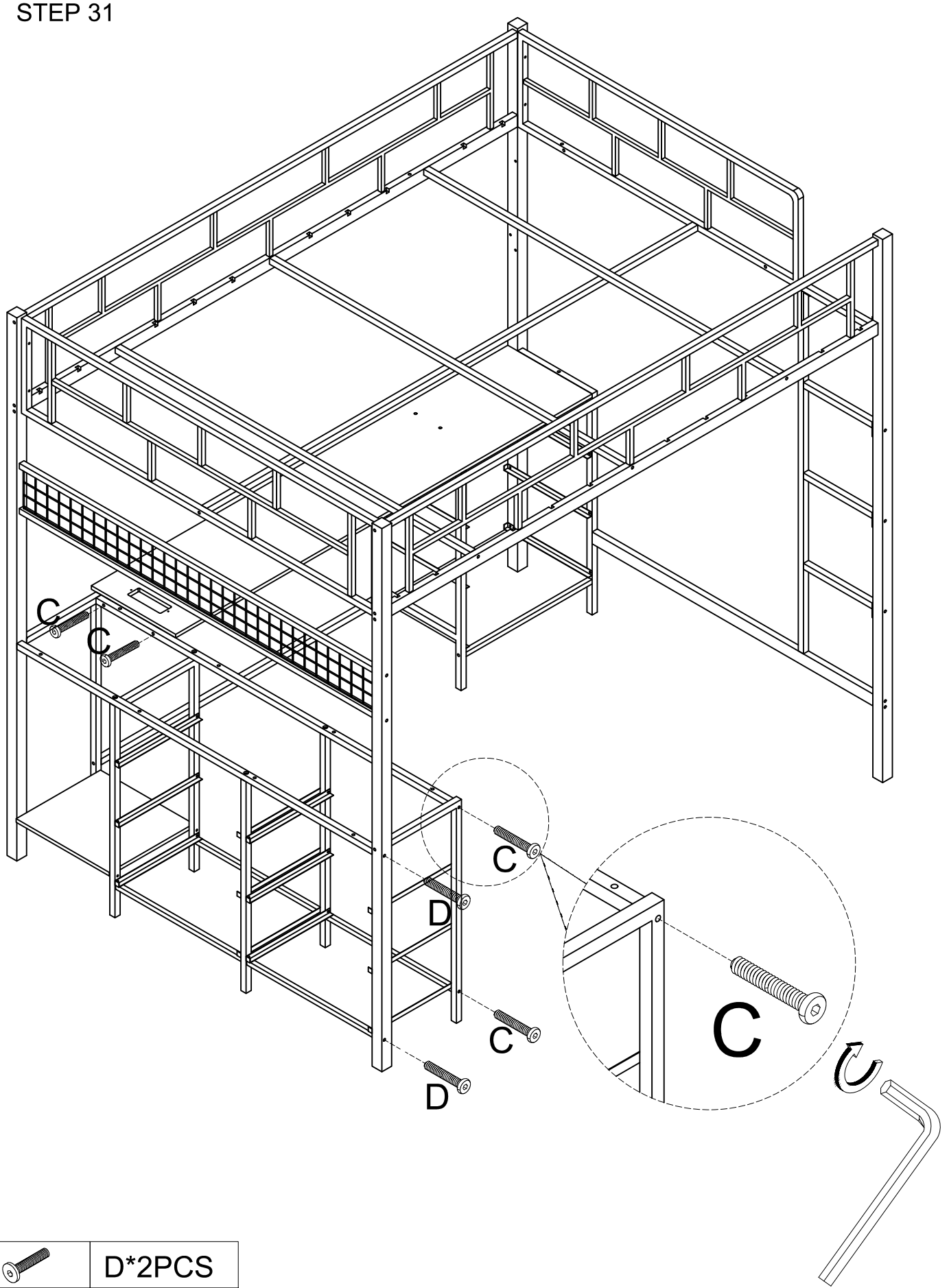

	D*2PCS
	C*4PCS

For product support or inguiries, please reach out to us at harpaqservice@gmail.com

STEP 32

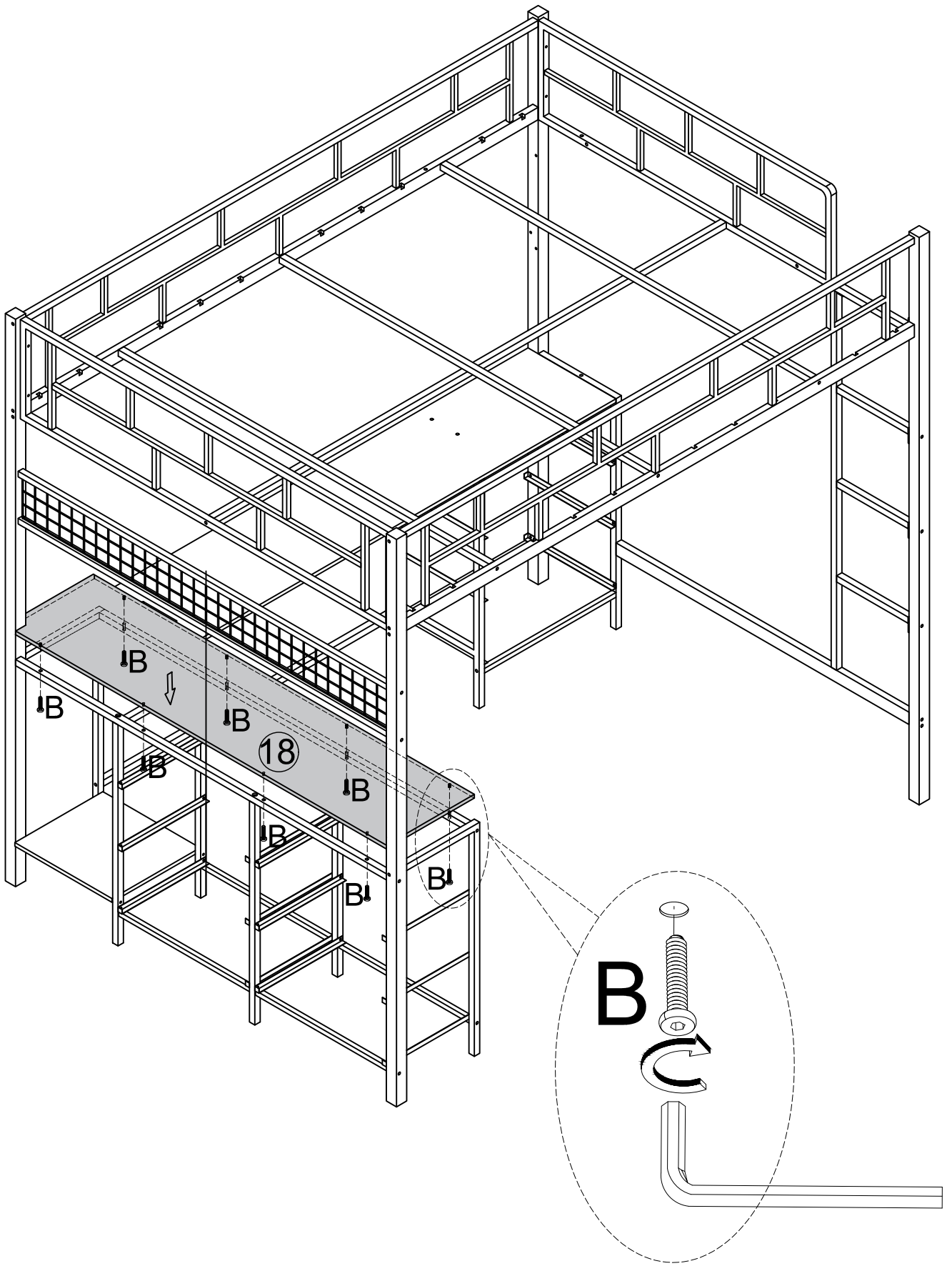

	B*8PCS

For product support or inguiries, please reach out to us at harpaqservice@gmail.com

STEP 33

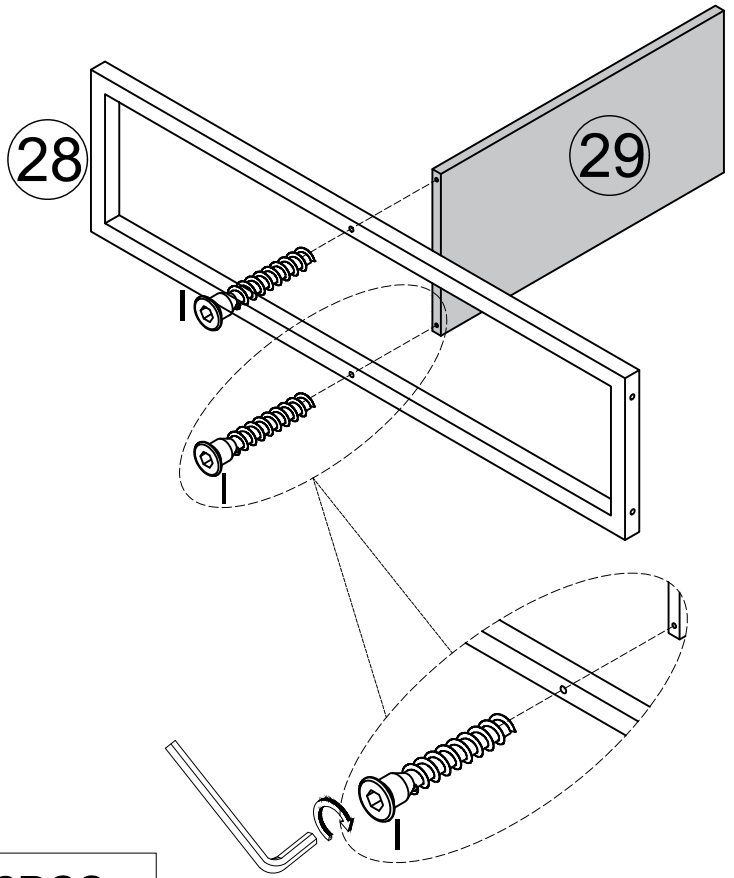

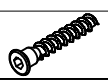	I*2PCS

STEP 34

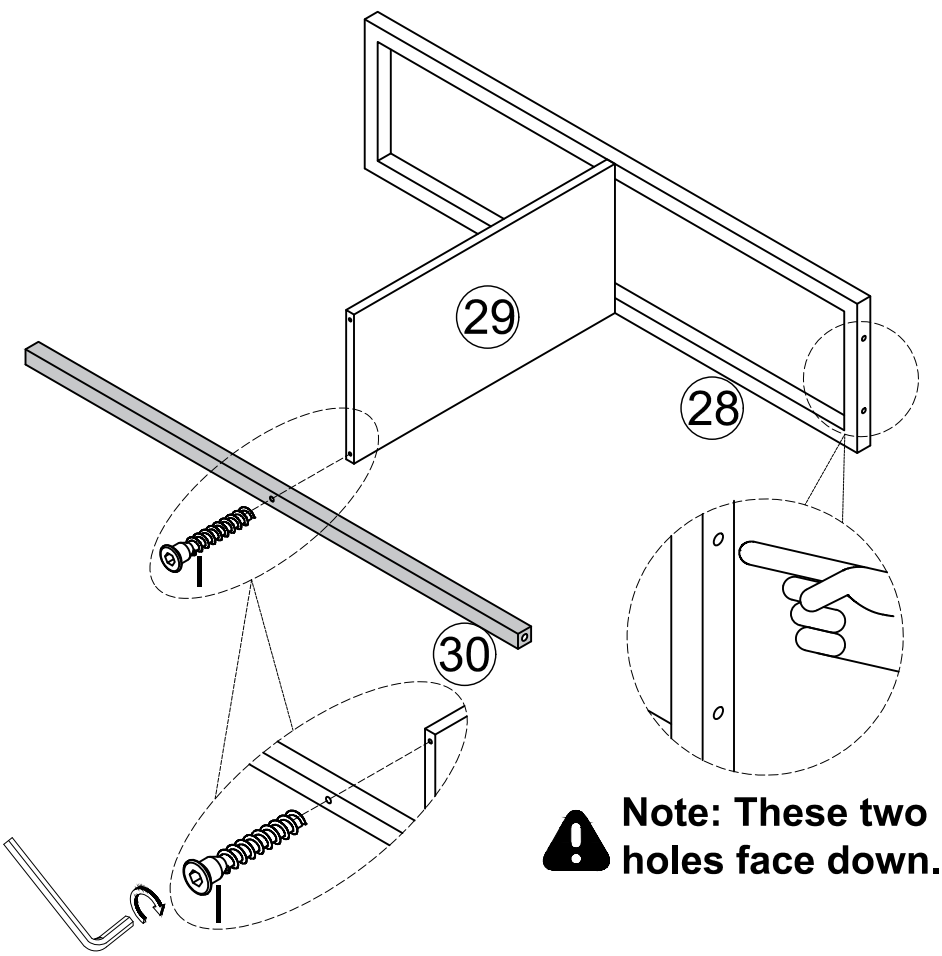

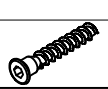	I*1PC

Assembly Steps / Montageschritte

STEP 35

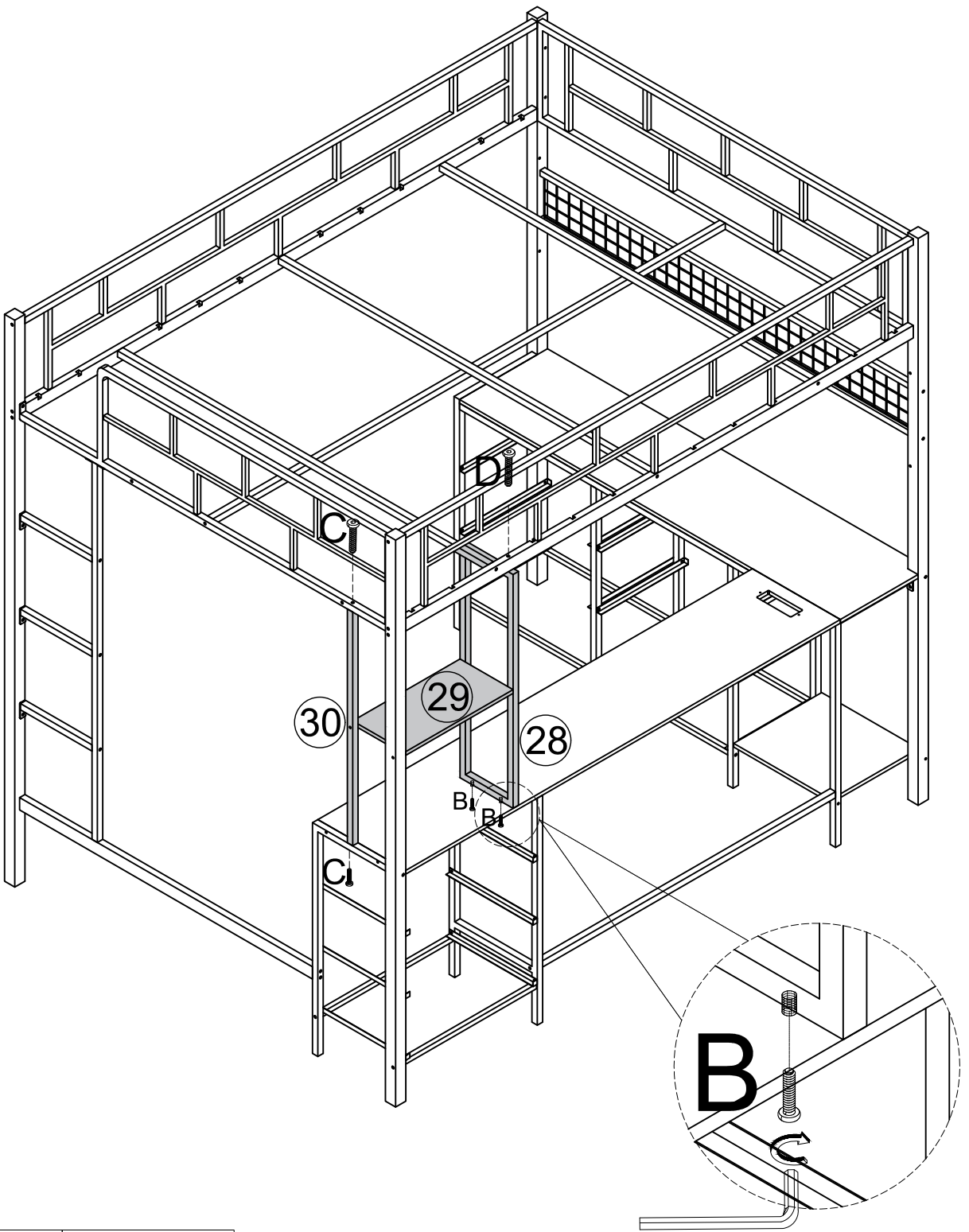

	D*1PC
	C*2PCS
	B*2PCS

For product support or inguiries, please reach out to us at harpaqservice@gmail.com

Assembly Steps / Montageschritte

STEP 36

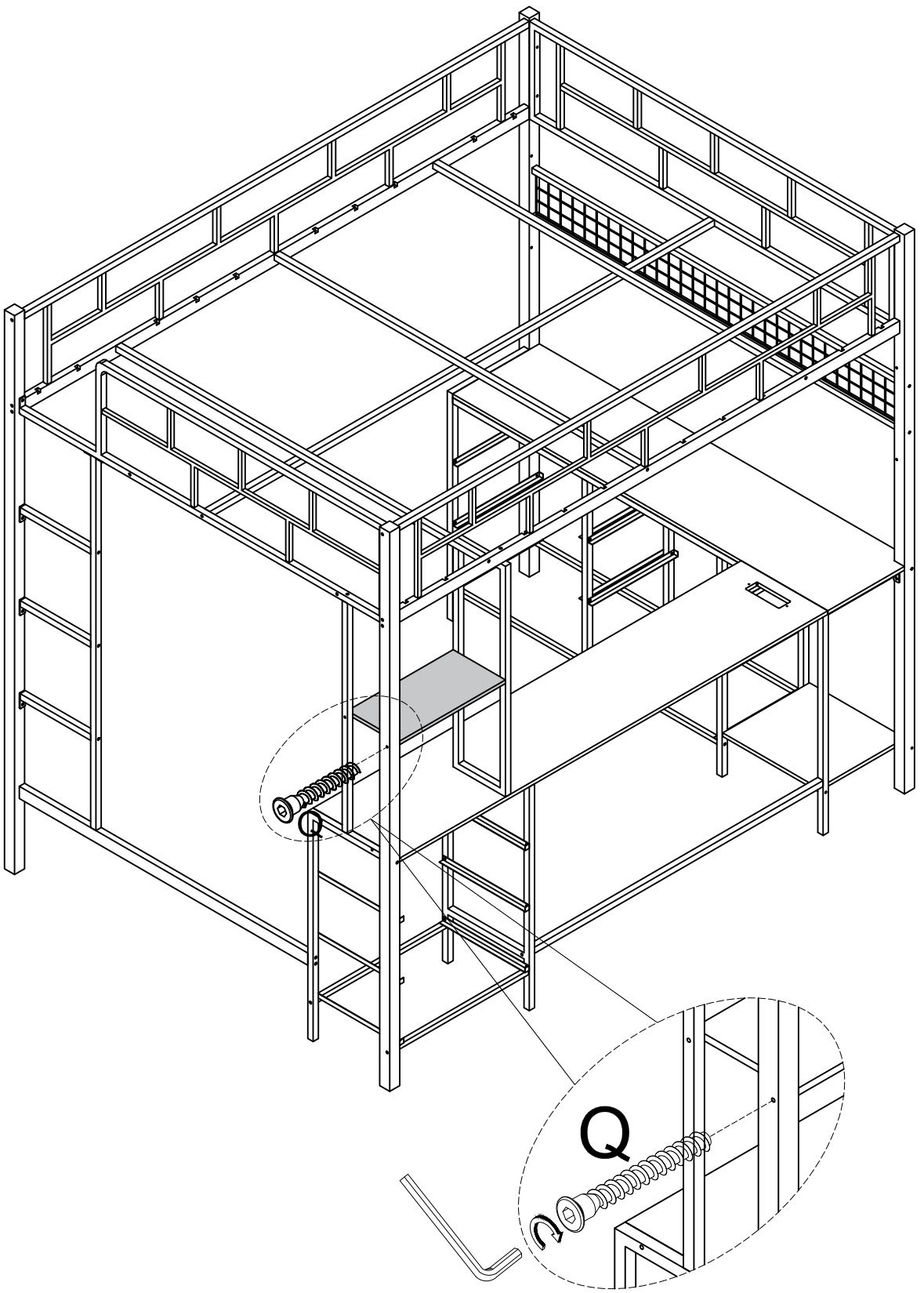

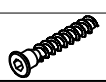	Q*1PC

For product support or inguiries, please reach out to us at harpaqservice@gmail.com

STEP 37

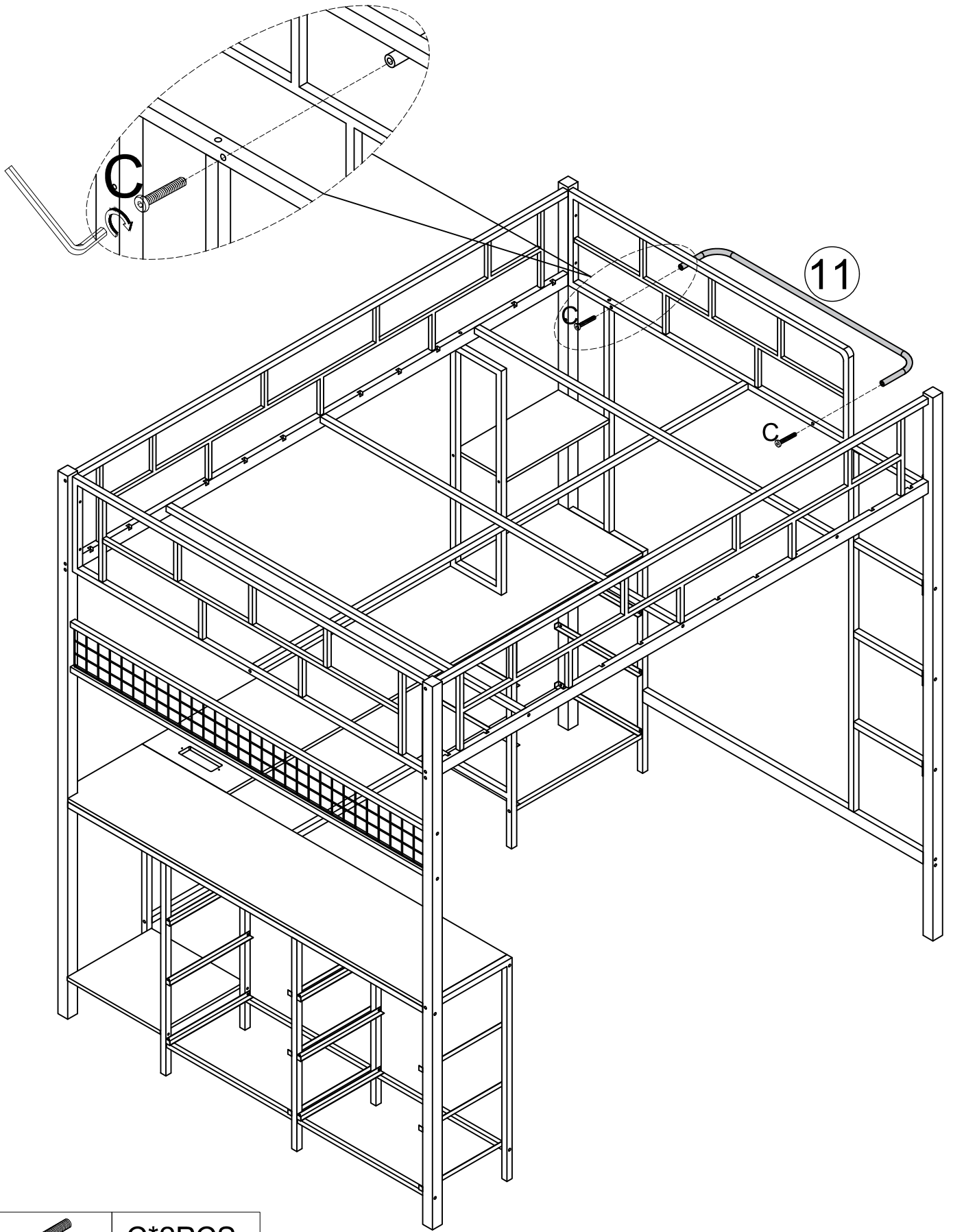

	C*2PCS

For product support or inguiries, please reach out to us at harpaqservice@gmail.com

Assembly Steps / Montageschritte

STEP 38

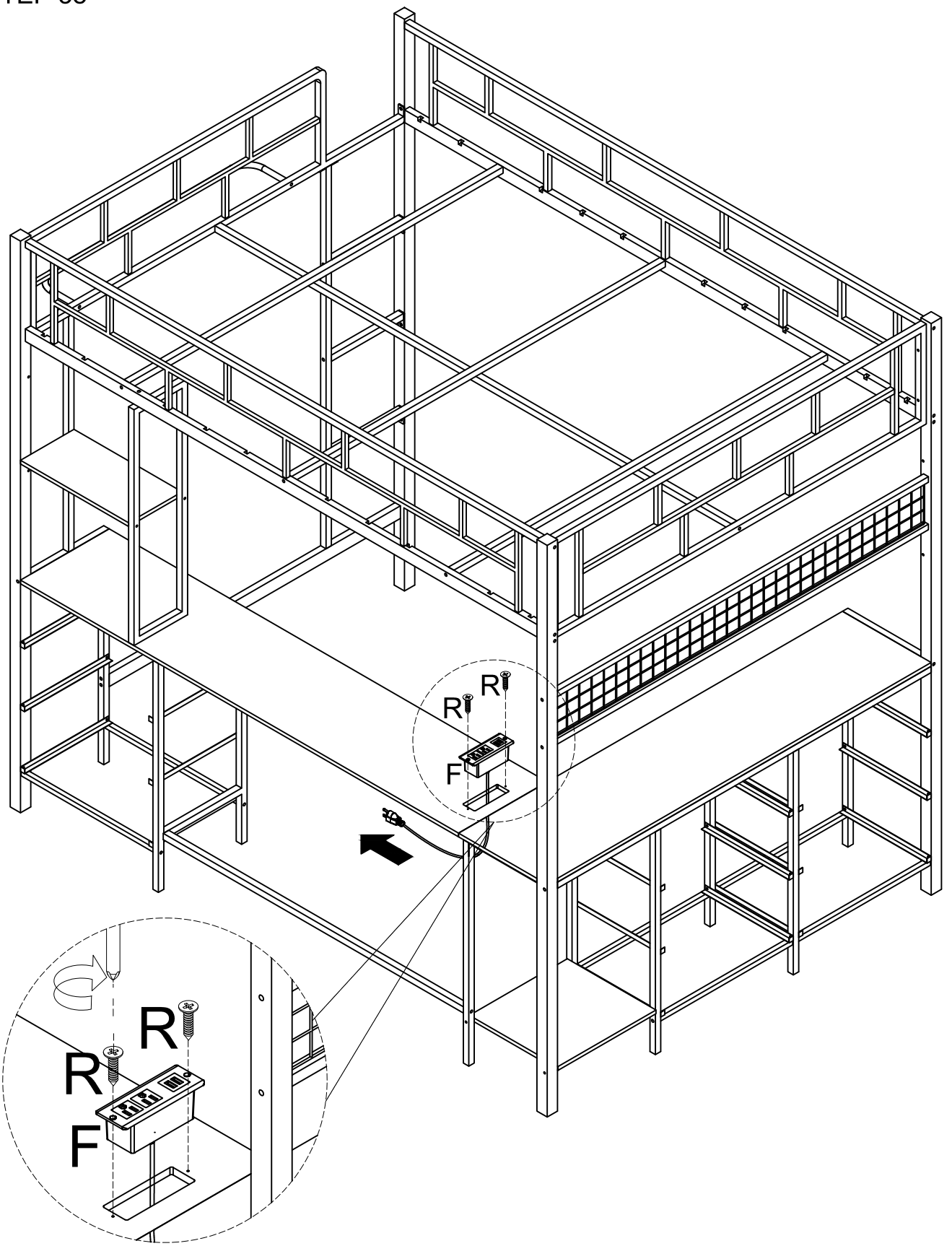

	F*1PC
	R*2PCS

For product support or inguiries, please reach out to us at harpaqservice@gmail.com

STEP 39

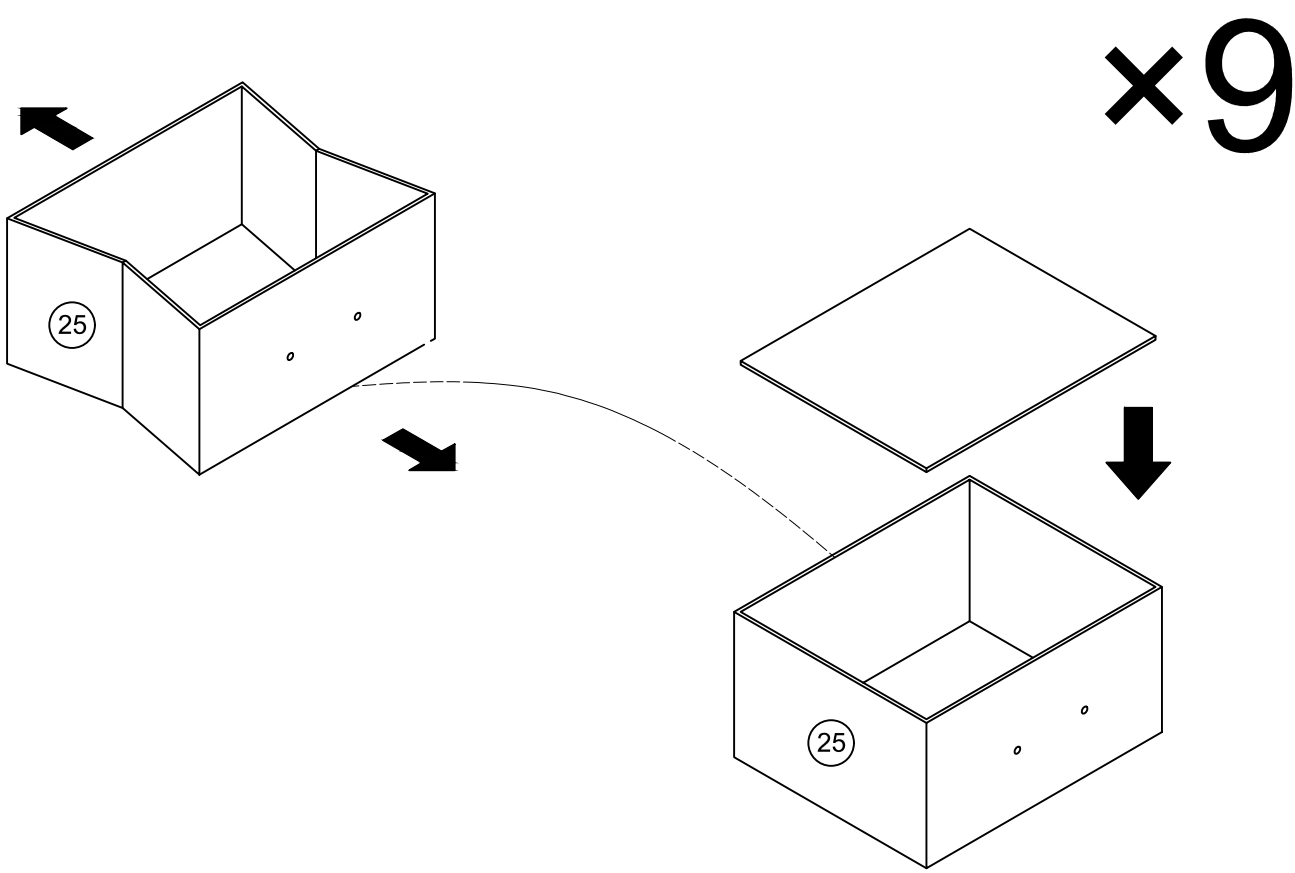

For product support or inguiries, please reach out to us at harpaqservice@gmail.com

STEP 40

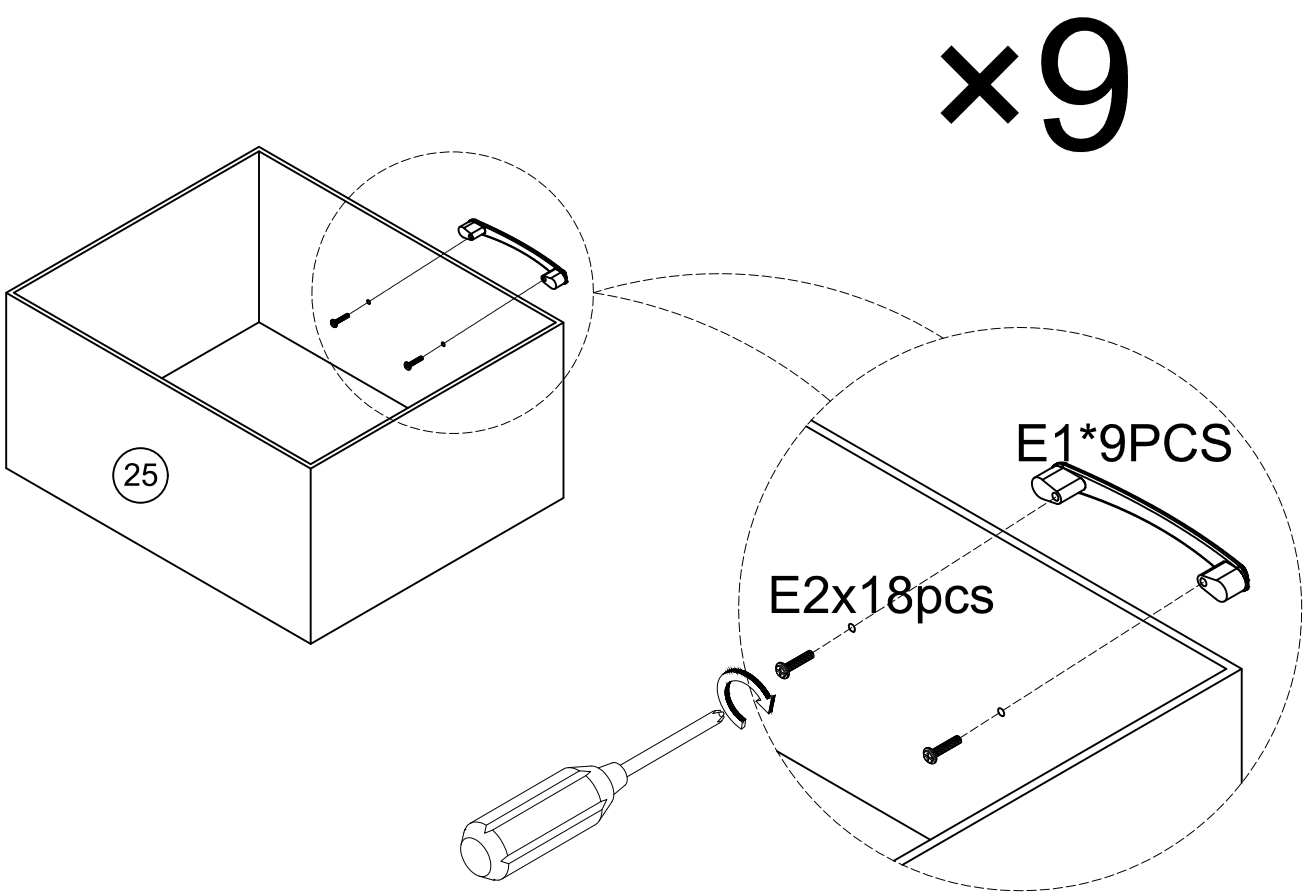

	E1*9PCS
	E2*18PCS

STEP 41

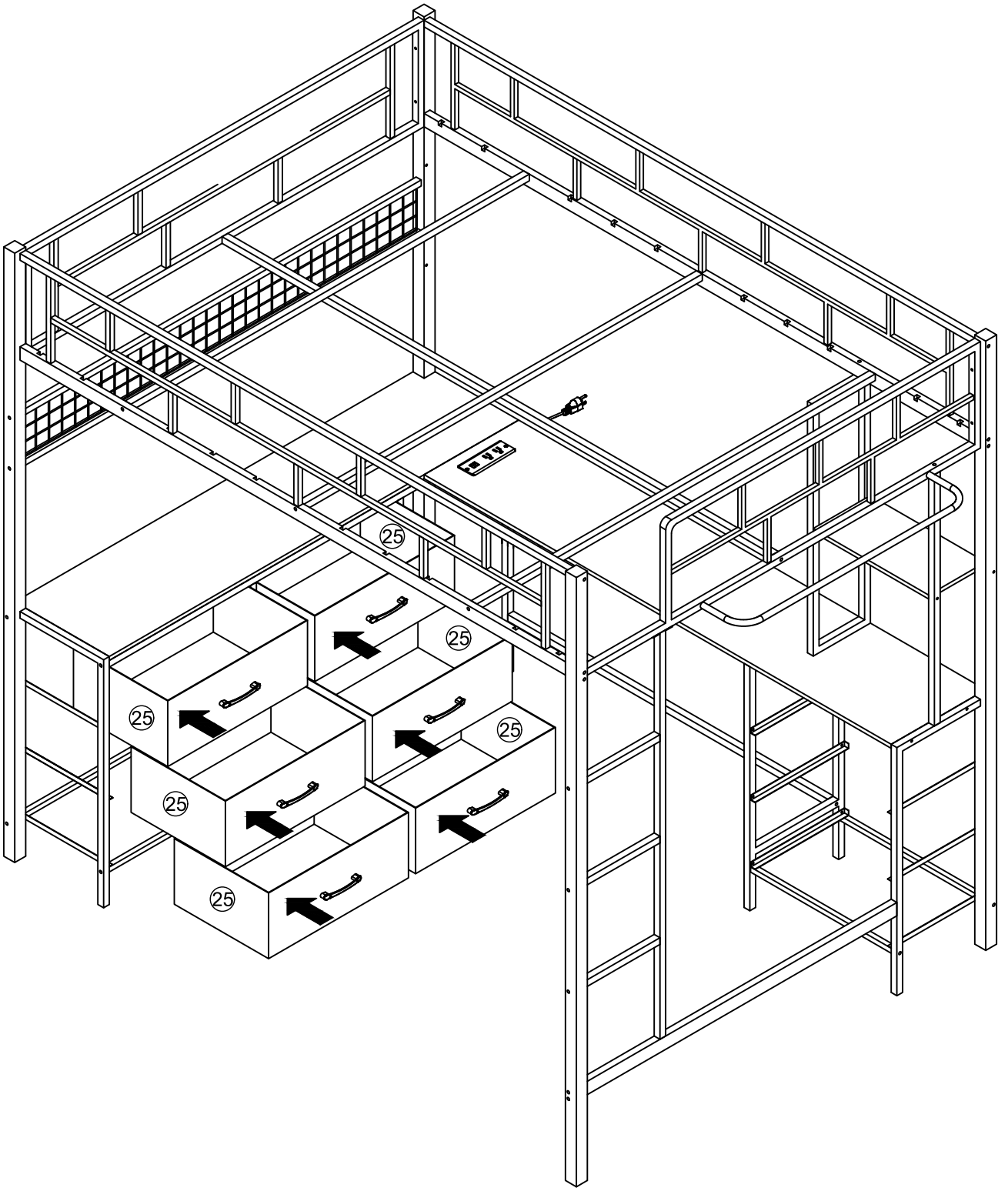

Assembly Steps / Montageschritte

STEP 42

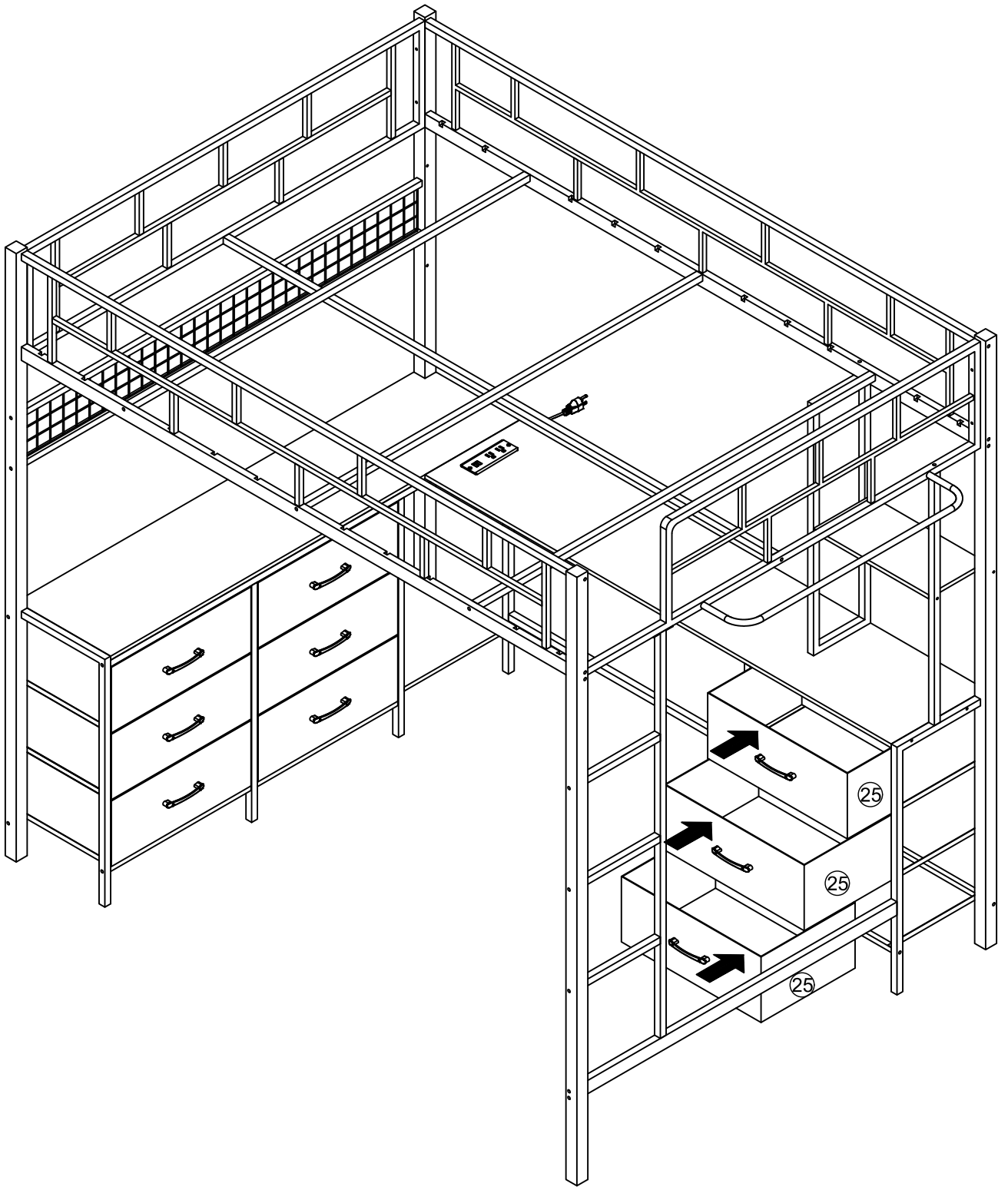

STEP 43

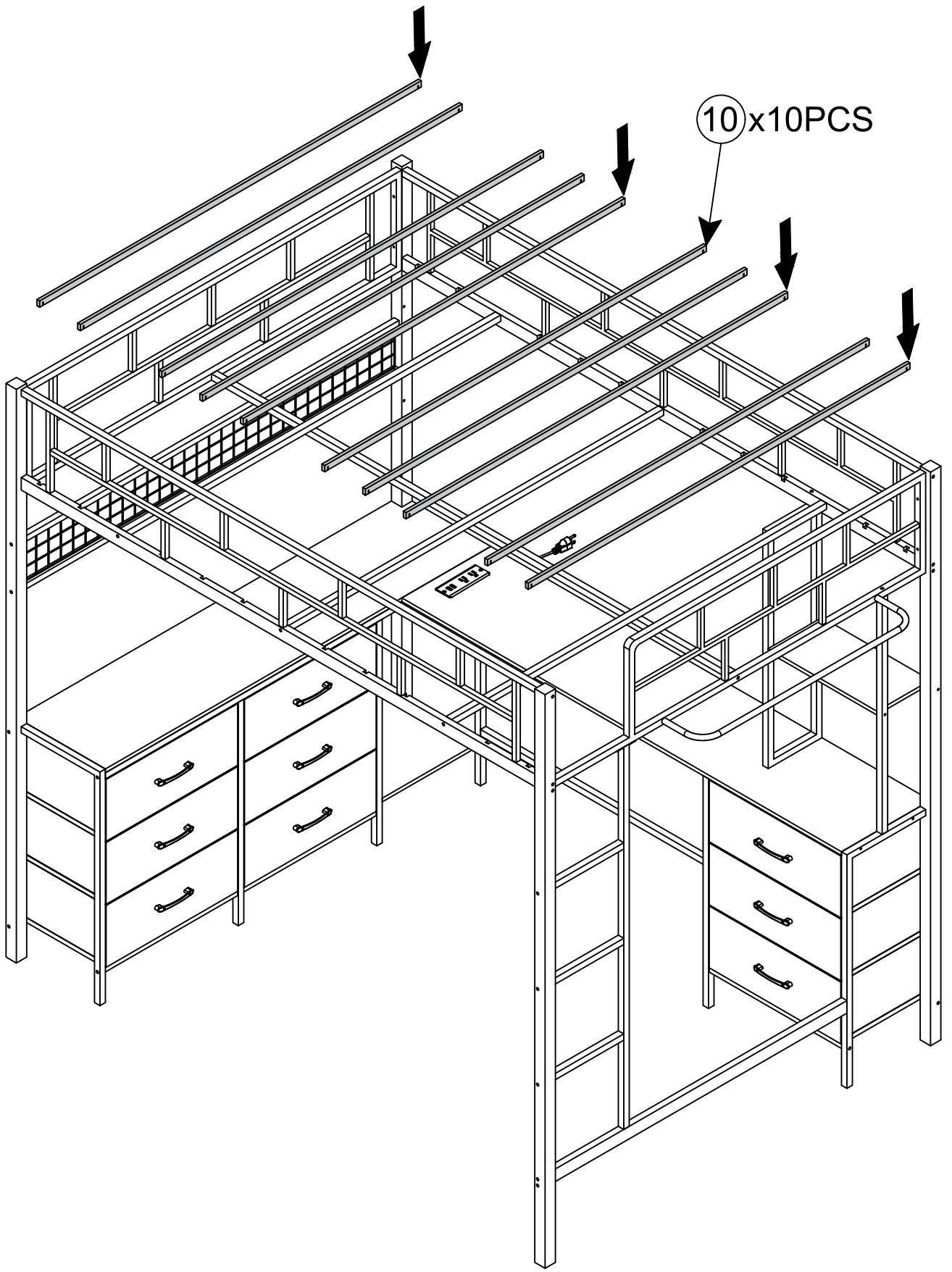

Assembly Steps / Montageschritte

STEP 44

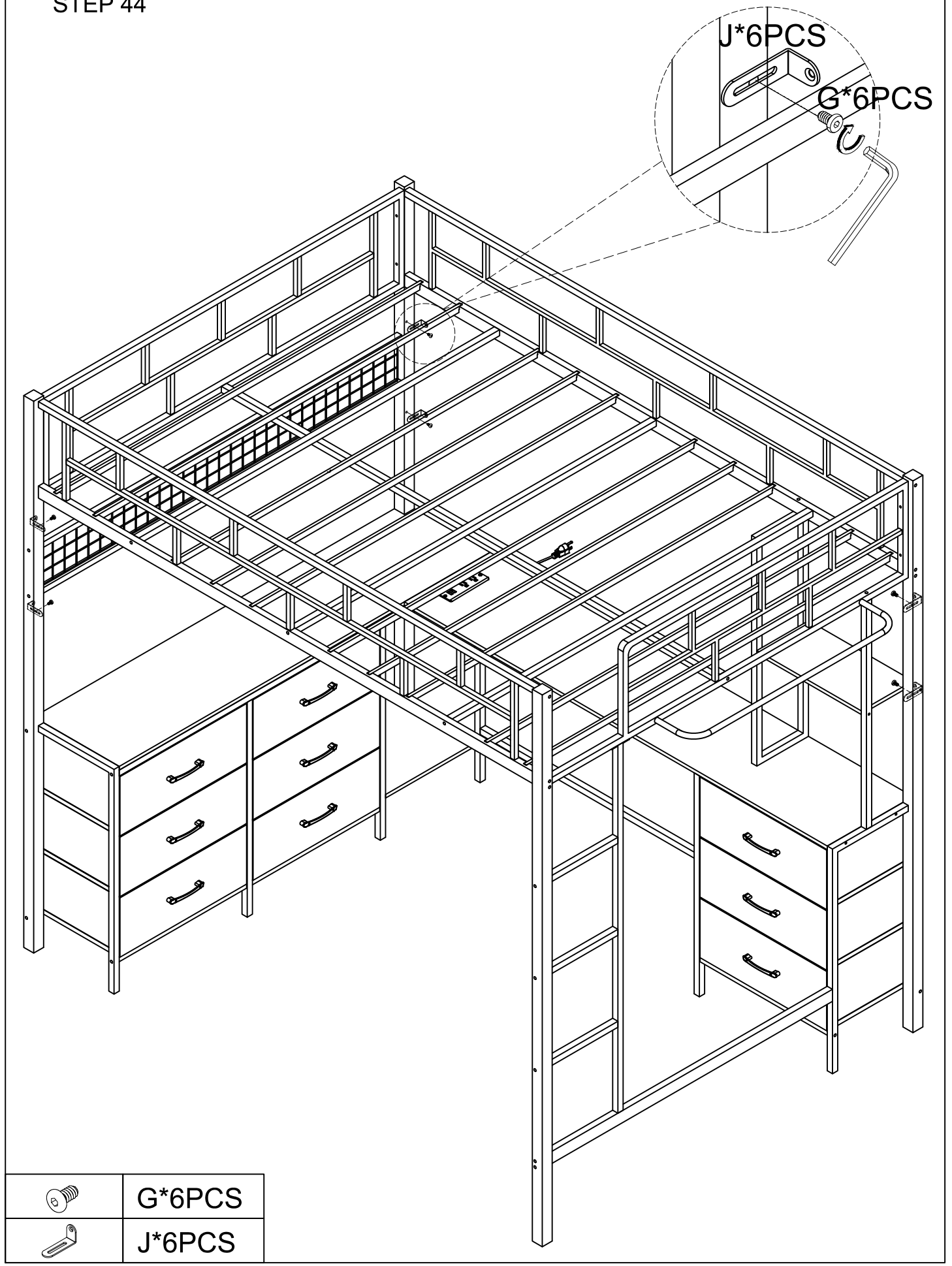

	G*6PCS
	J*6PCS

For product support or inguiries, please reach out to us at harpaqservice@gmail.com

STEP 45

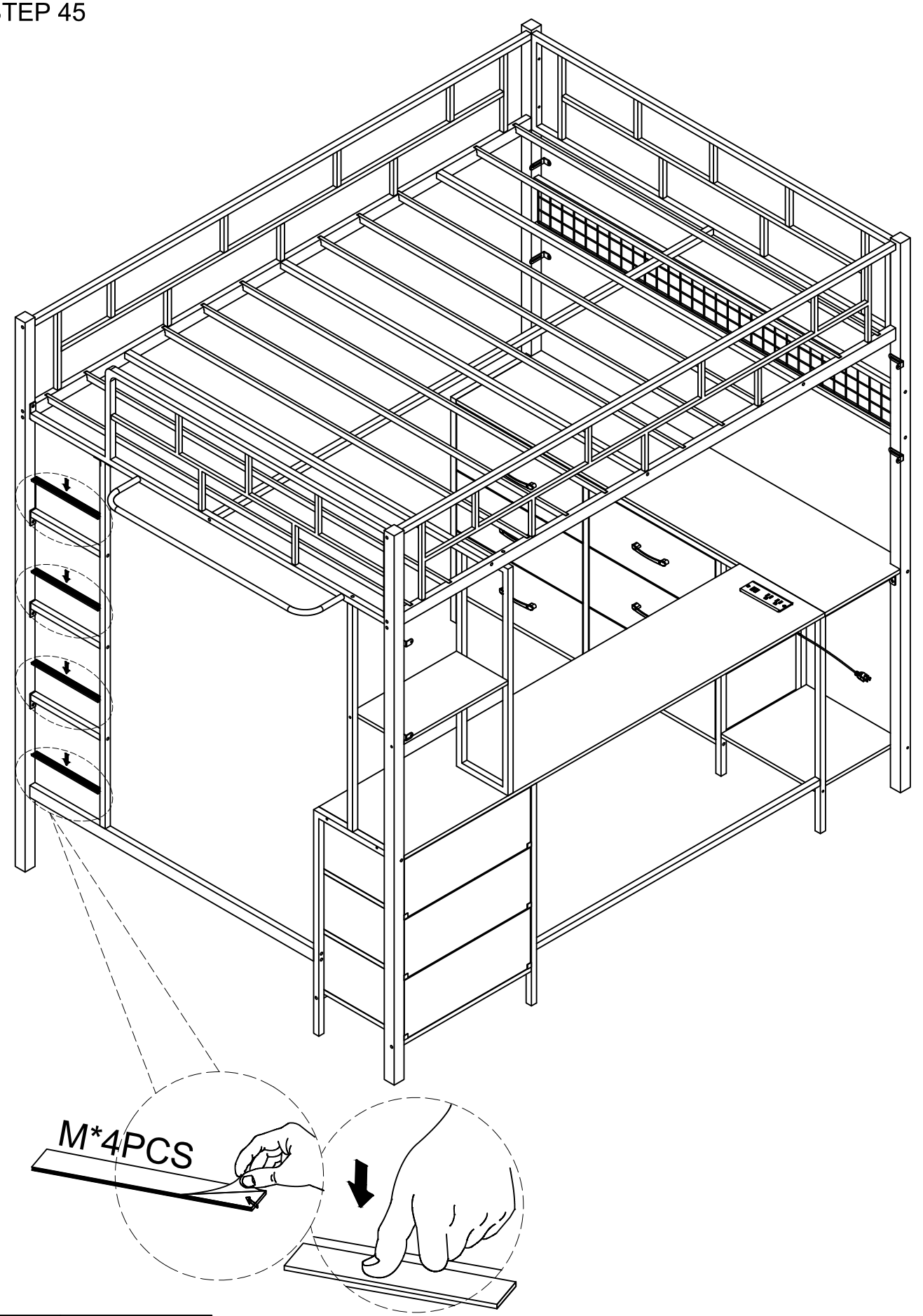

	M*4PCS

Assembly Steps / Montageschritte

STEP 46

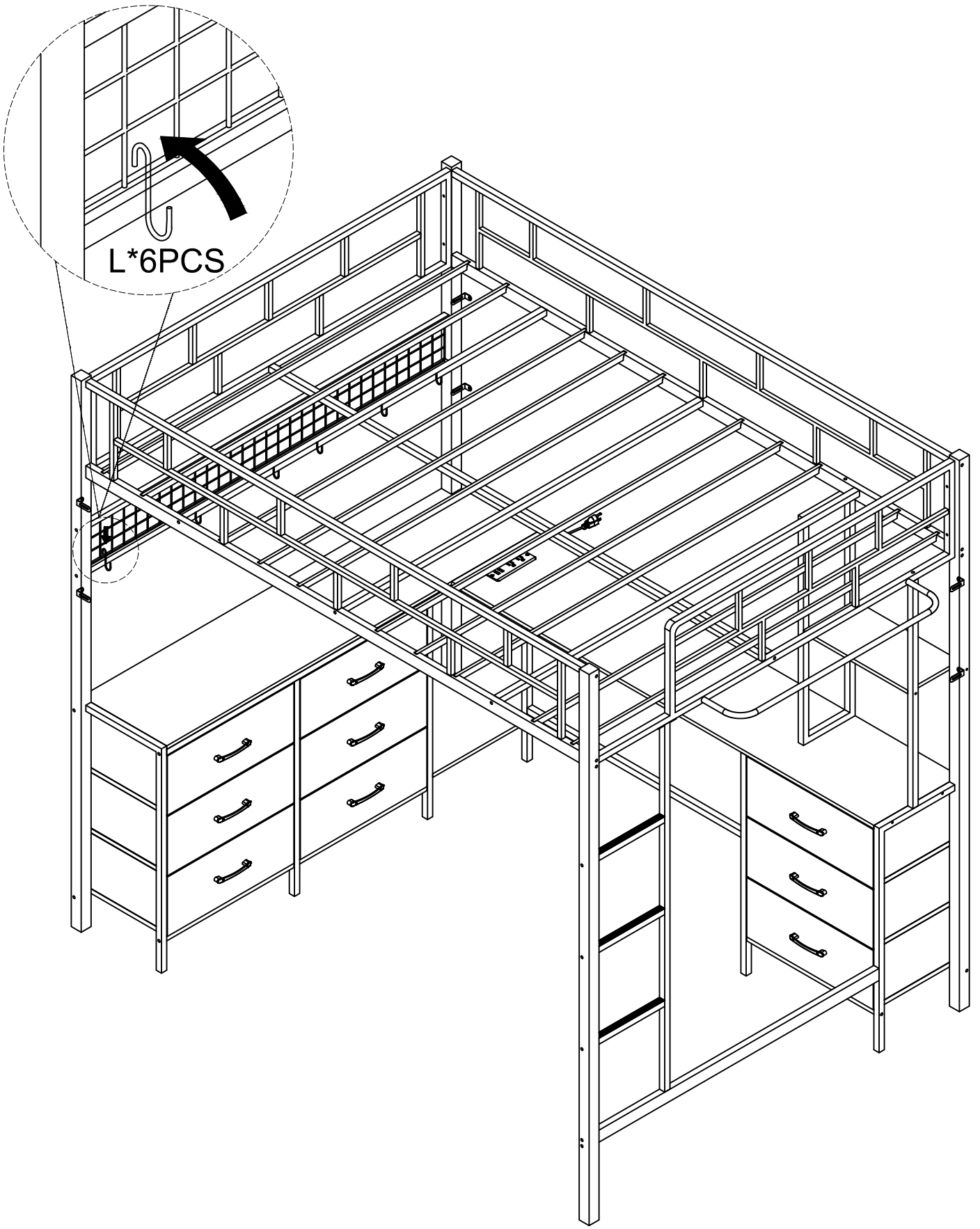

	L*6PCS

For product support or inguiries, please reach out to us at harpaqservice@gmail.com

STEP 47

ATTENTION

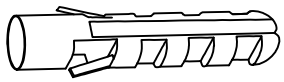

① Chose your desired location on the wall, have your friend hold the product in place and use a pencil to mark where the anchor will go.

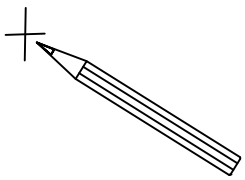

② Please pre-drill holes on the wall with a drill bit that'slarger than the wall anchors.

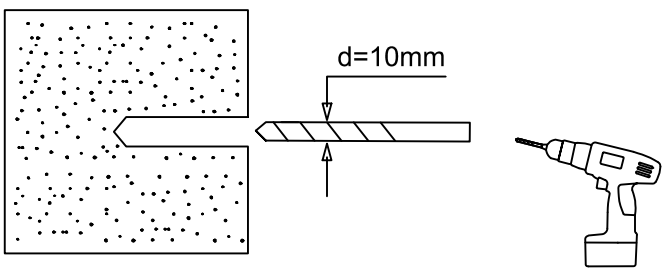

③ Push the wall anchor gently into the pre-drilled hole.

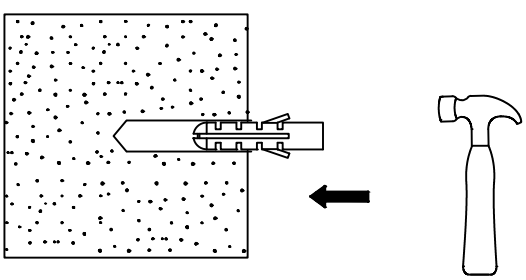

④ Drive the screws with a screwdriver into the wall anchor to complete the installation.

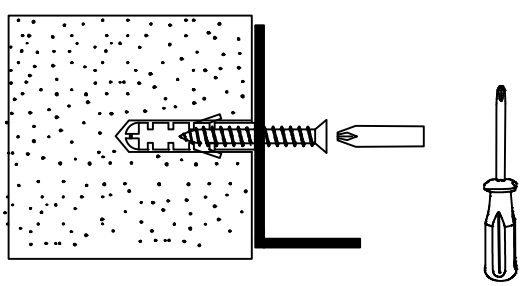

For product support or inguiries, please reach out to us at harpaqservice@gmail.com

STEP 48

ATTENTION

- Check for hidden pipes and cables before drilling.

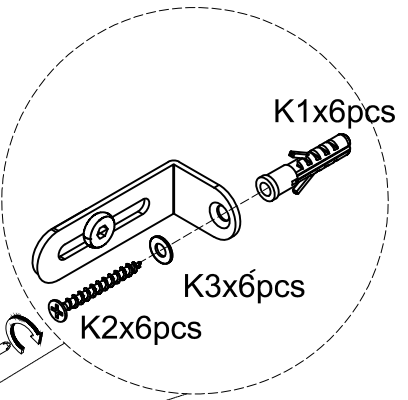

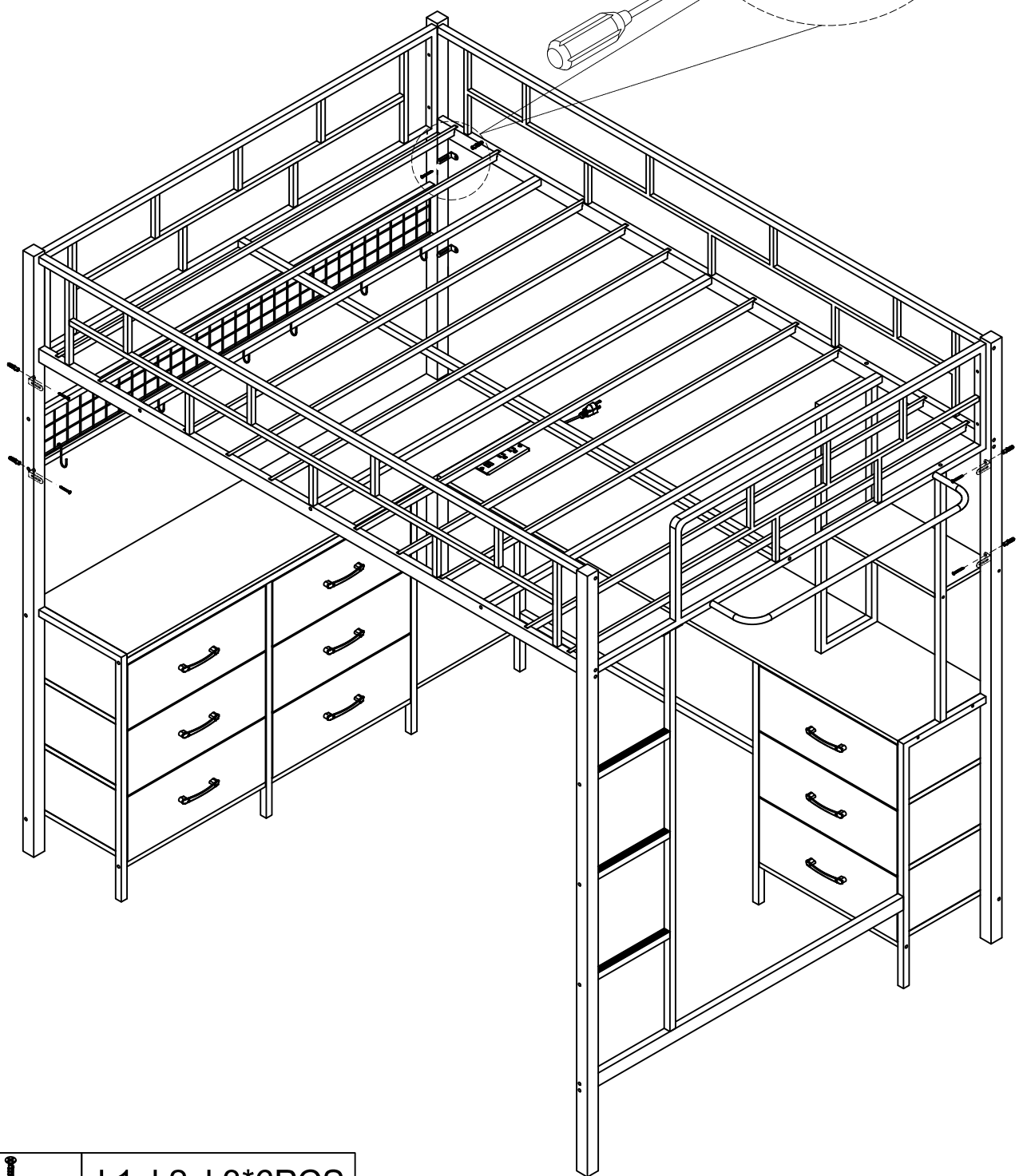

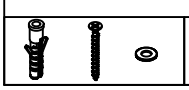	k1xk2xk3*6PCS

STEP 49

