ASSEMBLY INSTRUCTIONS

BOOKCASE WITH 2 DOORS

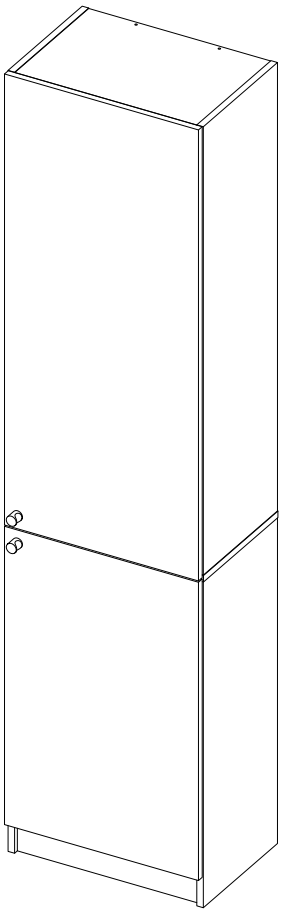

THIS FURNITURE MUST BE FIXED TO THE WALL

⚠ WARNING

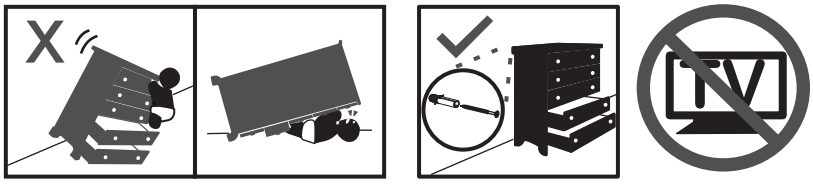

Children have died from furniture tip over. To reduce the risk of tip over:

- **ALWAYS secure this furniture to the wall using a wall anchor.**
- **NEVER allow children to stand, climb, or hang on drawers, doors or shelves.**
- **Do not defeat or remove the drawer interlock system.**
- **Place heaviest items in the lowest drawers.**
- **NEVER put a TV on this furniture.**

To ensure the safety of those using this cabinet, it is crucial to properly secure it to the wall using a wall anchor . This product includes the necessary items for fixing the furniture to the wall. However, it is important to note that incorrect installation or failure to use the tip-over device can result in serious injury or even death.
For this reason, we highly recommend that a professional installer handle the installation of the cabinet to the wall.

LOT N°

Index

What will you need? 2

Where should you start? 3

What's in the hardware bag? 4

How do the dowels and Minifix system work? 5
(We also explain what they are)

Let's start assembling! 6

How much weight does your cabinet resist? 19

Our last recommendations for taking care of your cabinet 20

What will you need?

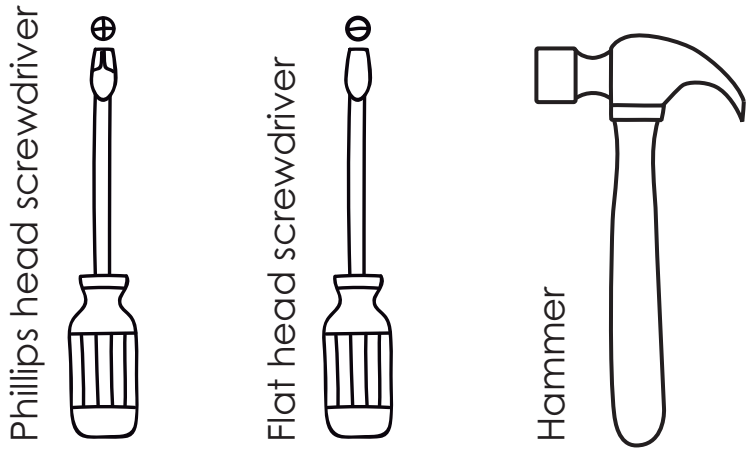

A flat, smooth surface. You can use the cardboard of the box or a rug.

An electric screwdriver isn't necessary, but it can make the work much easier :)

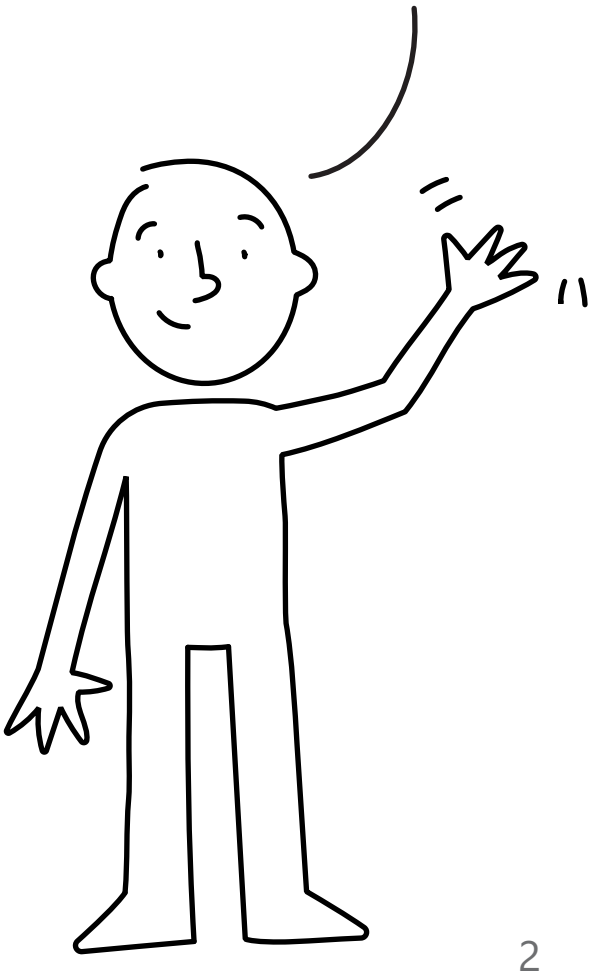

Where should you start?

This is so IMPORTANT!

Over the next few pages is the panel and hardware content for this cabinet.

Please make sure that the quantity of each one is correct, and that everything is in good shape.

(When the cabinet is already assembled there's no warranty for this)

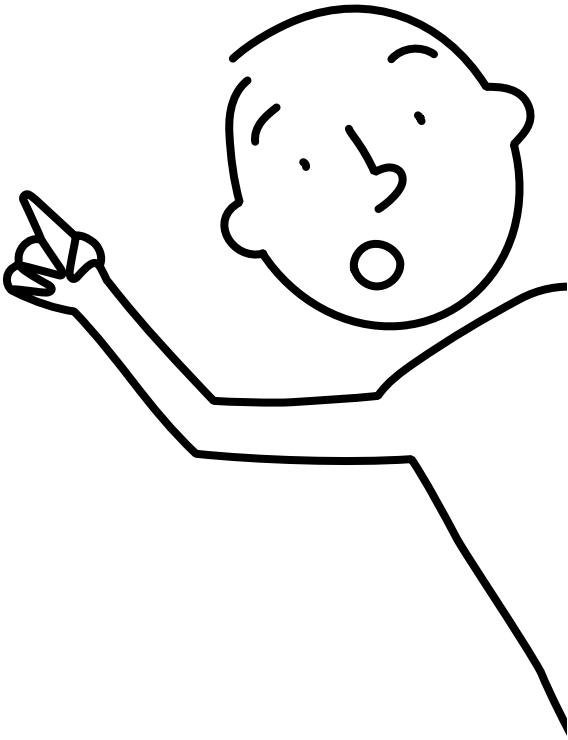

Panel quantity

A - x1	B - x1	C - x1	D - x1
E - x1	F - x1	G - x3	H - x1
I - x1	J - x1	K - x2	L - x2
M - x1	N - x1		

What's in the hardware bag?

Wood dowel x7	Spreading bolt x21	Minifix cam x21	Cover caps x22	Shelf Support x12
Hinge + Screws x4	Naill x46	Flat head screw x2	Drywall screw x2	Handle Button + Screws x2
Rear Panel Clamp x2	Nail-on glide x4	H profile 37,2¨ x1	H profile 26,1¨ x1	

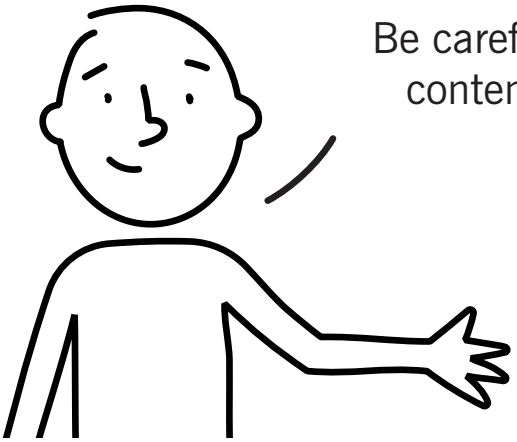

Be careful!, try not to lose anything from this bag, its content is necessary for assembling your cabinet.

How do the dowels and Minifix system work?

this is so important too!

Everytime you're using one of these connectors during the assembly, you should follow these same steps.

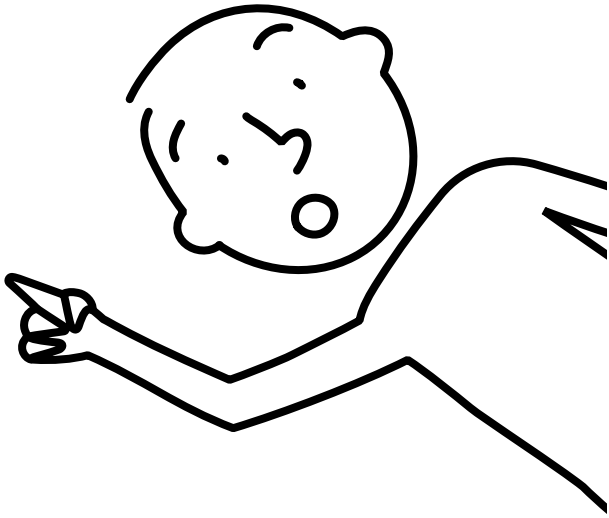

Wood dowels

They are little wooden cylinders.

1

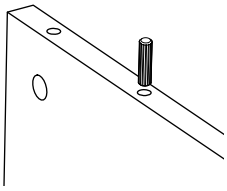

Put in the dowel inside the indicated hole and softly hit it until it's fully inside.

2

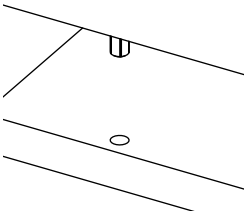

When joining two panels together, don't forget to gently hit the panels to adjust the joint.

Minifix system

It's a joint compound of two parts: a spreading bolt and a Minifix cam.

1

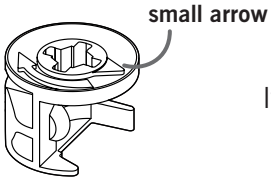

This is a Minifix cam. It has a little arrow on its upper surface.

2

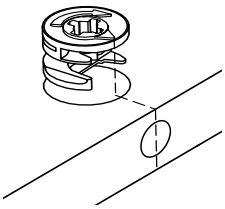

You should insert these cams with the little arrow pointing towards the drilling on the panel's edge (shown on the left).

3

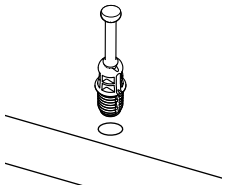

This is a spreading bolt. You should put it with the black plastic part facing

4

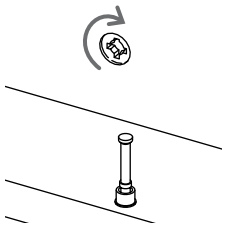

After joining two panels together you should turn the cams 180° with a phillips head screwdriver to adjust and secure the joint.

1 Let’s start assembling!

You can see the last page of this manual to have a full look of the panels of this cabinet.

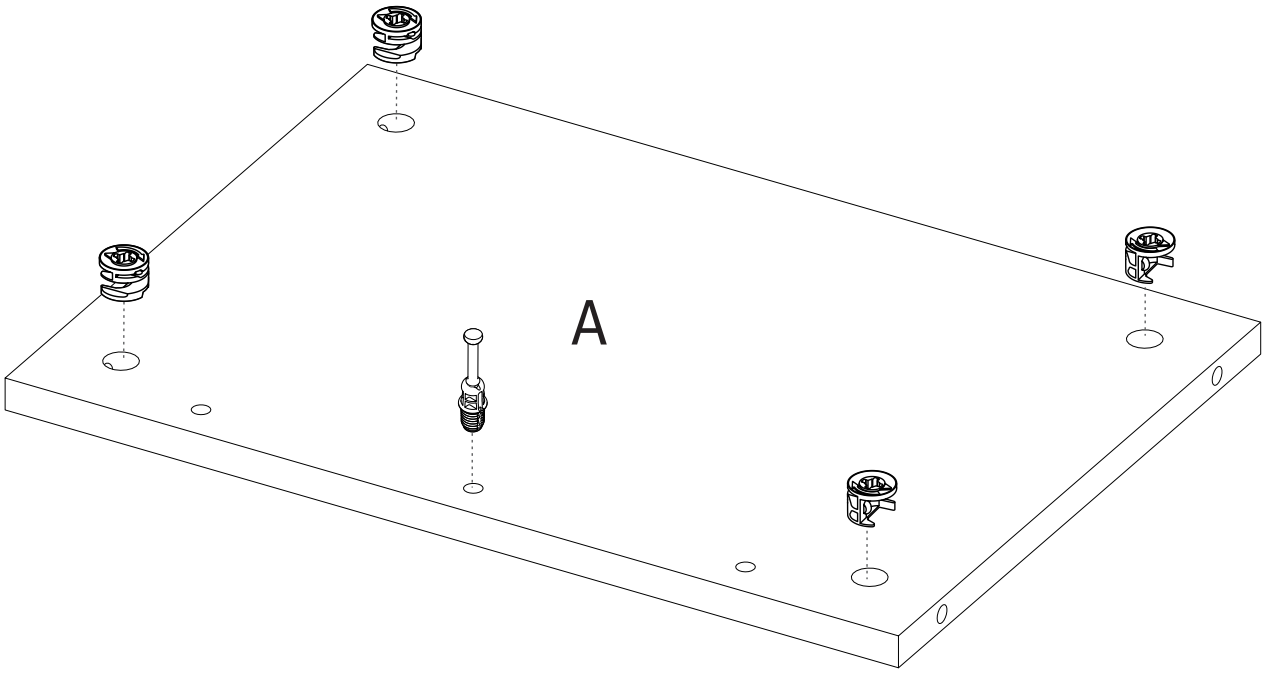

2

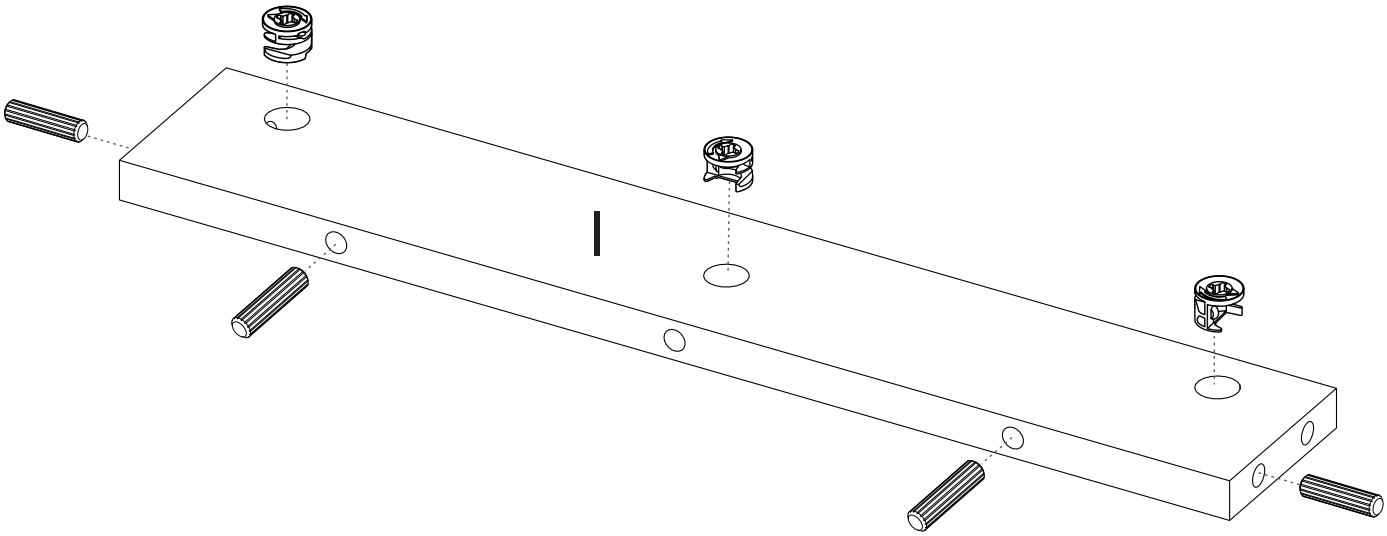

3

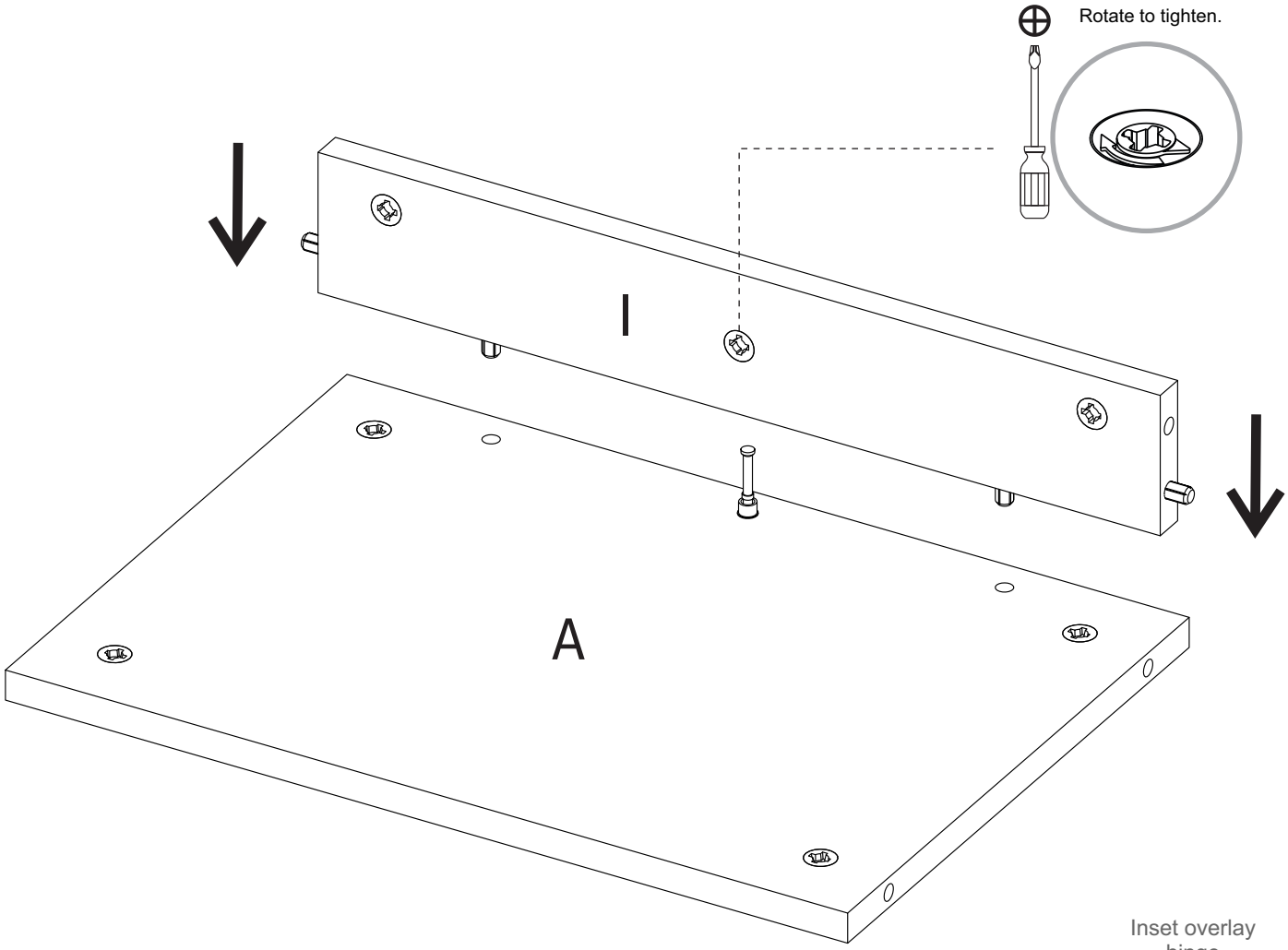

4

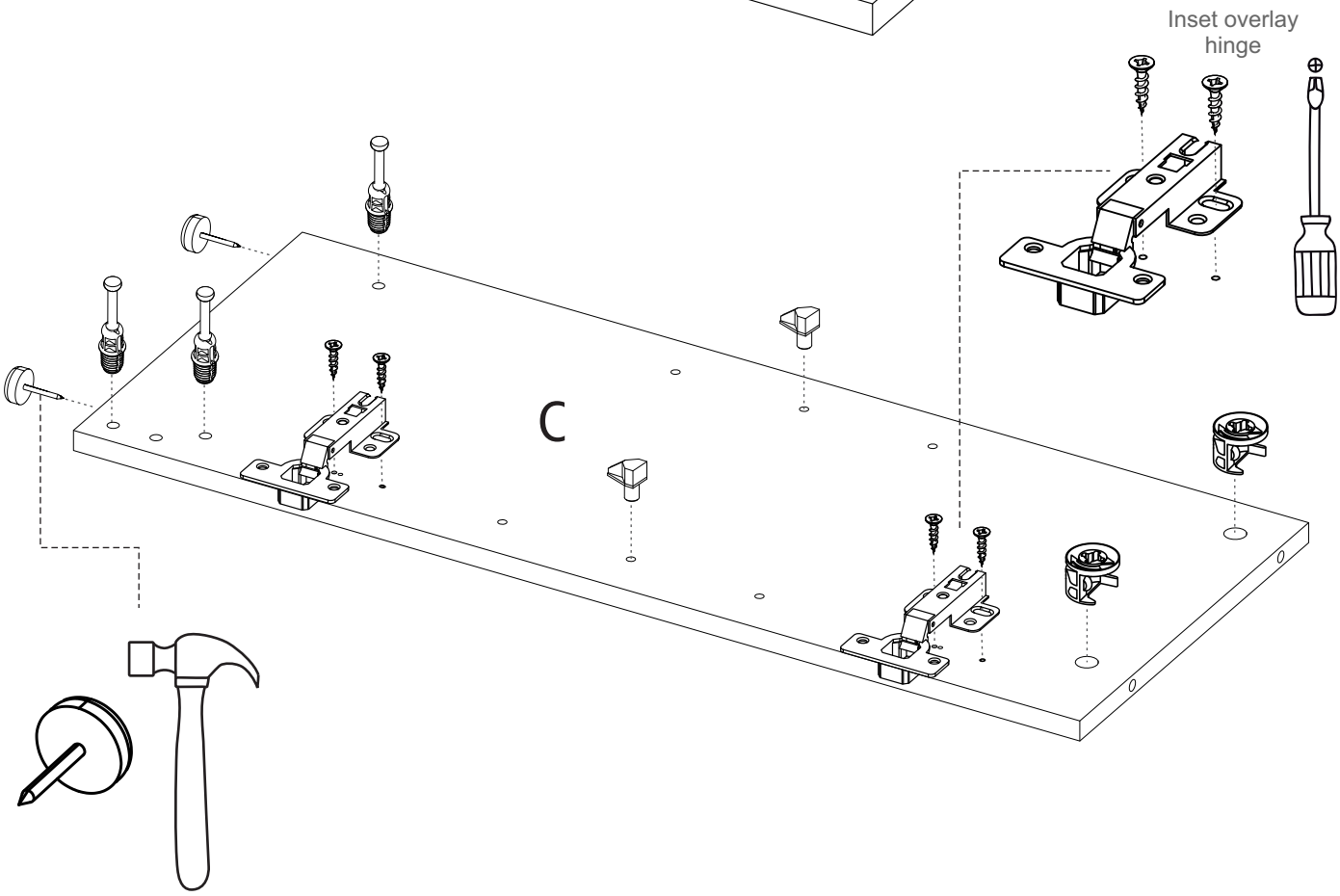

5

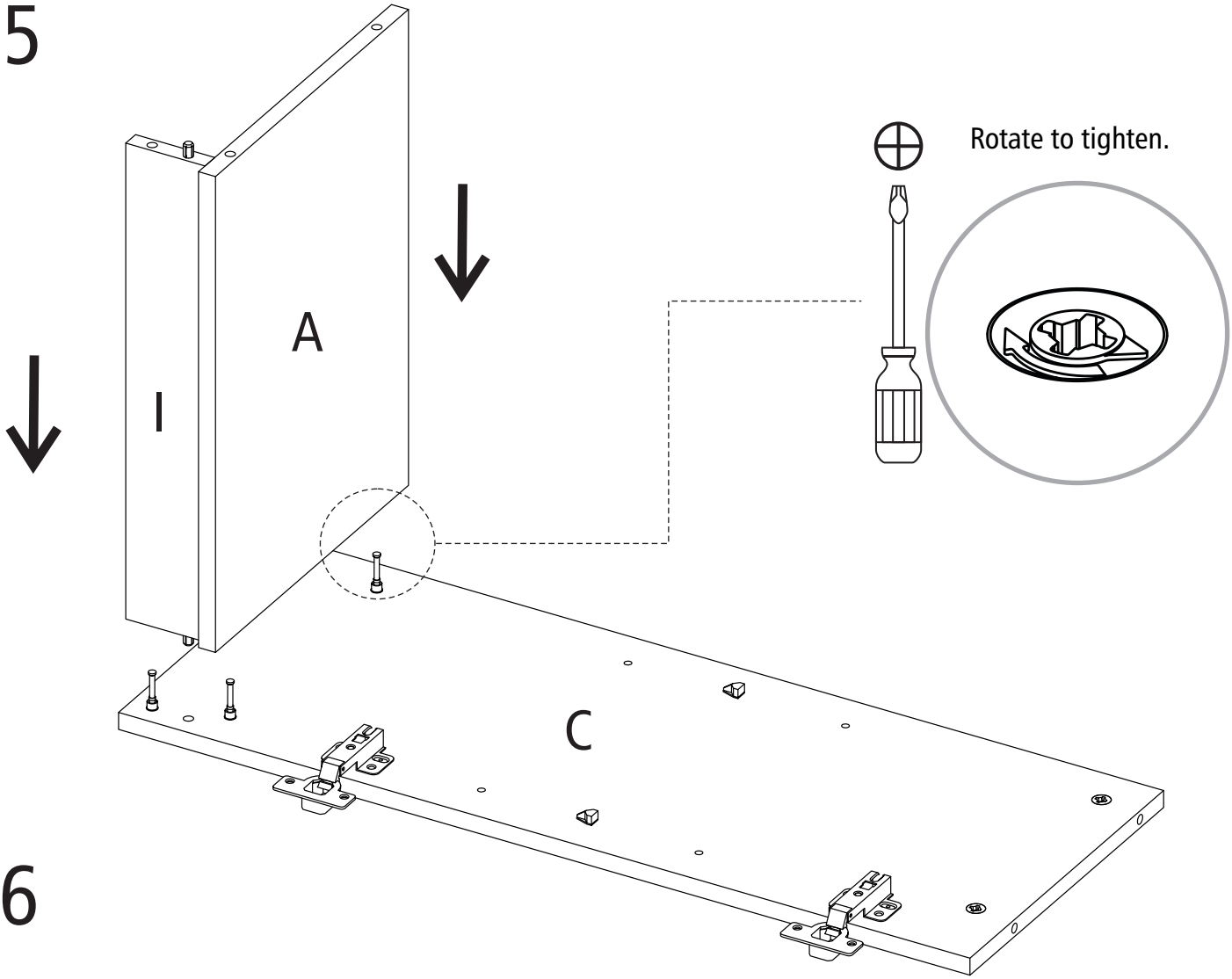

6

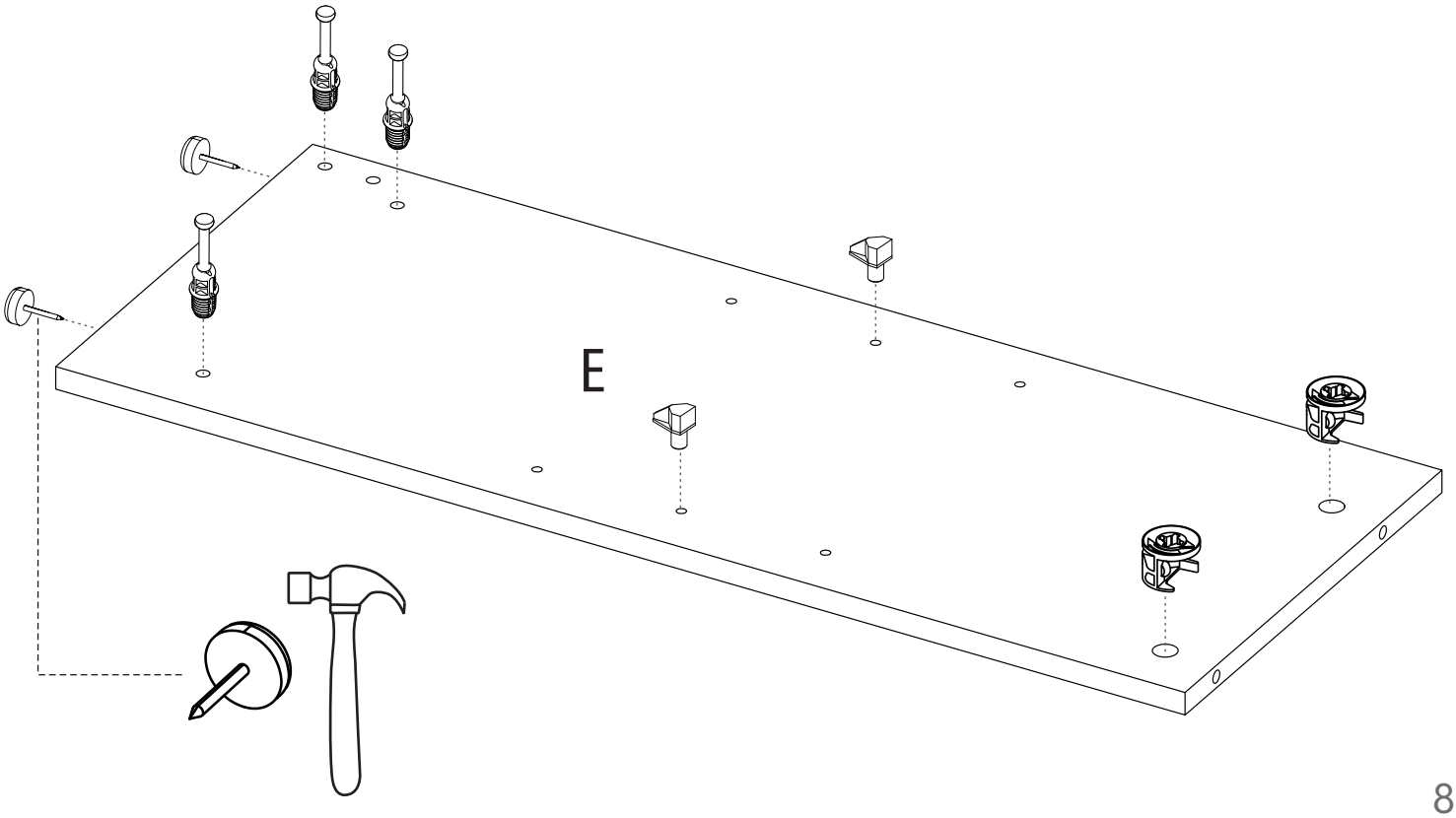

7

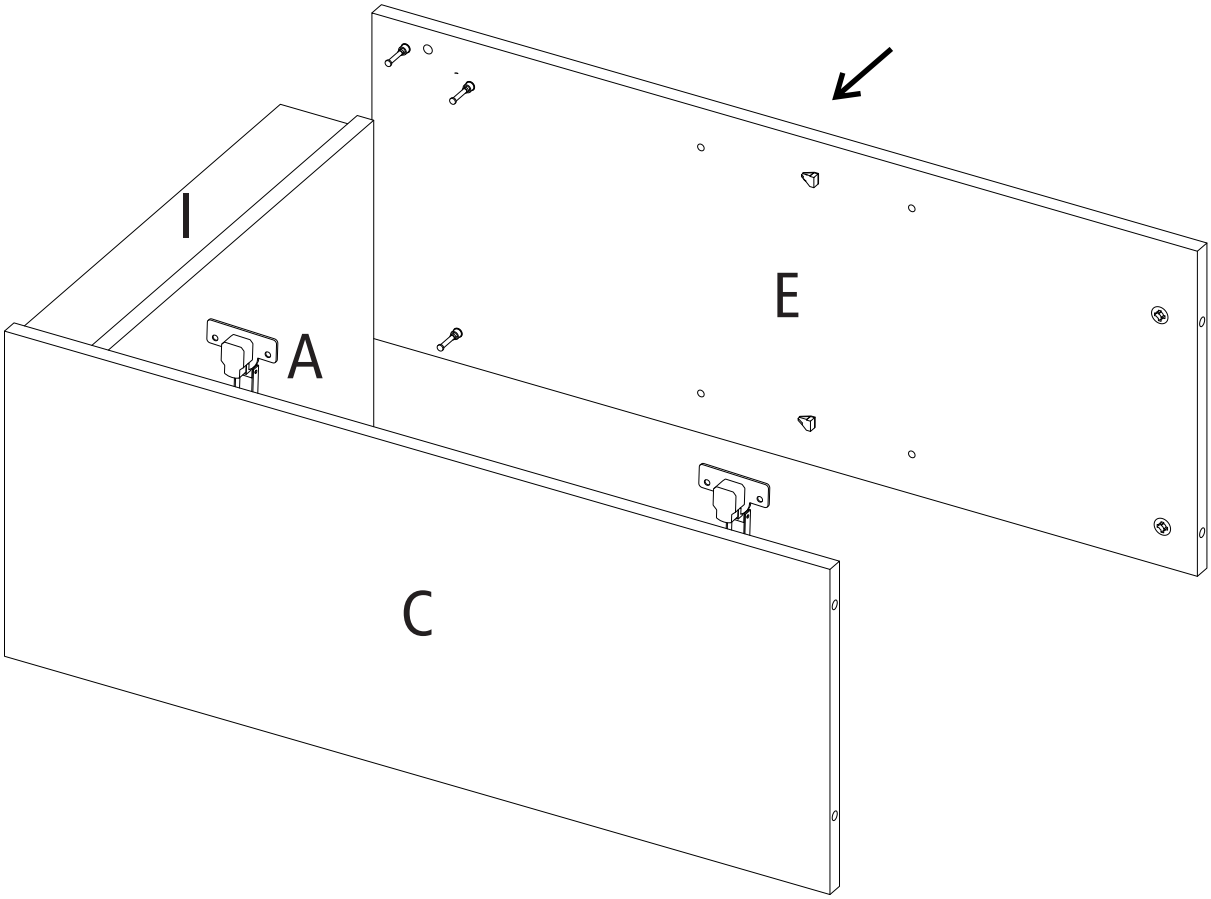

8

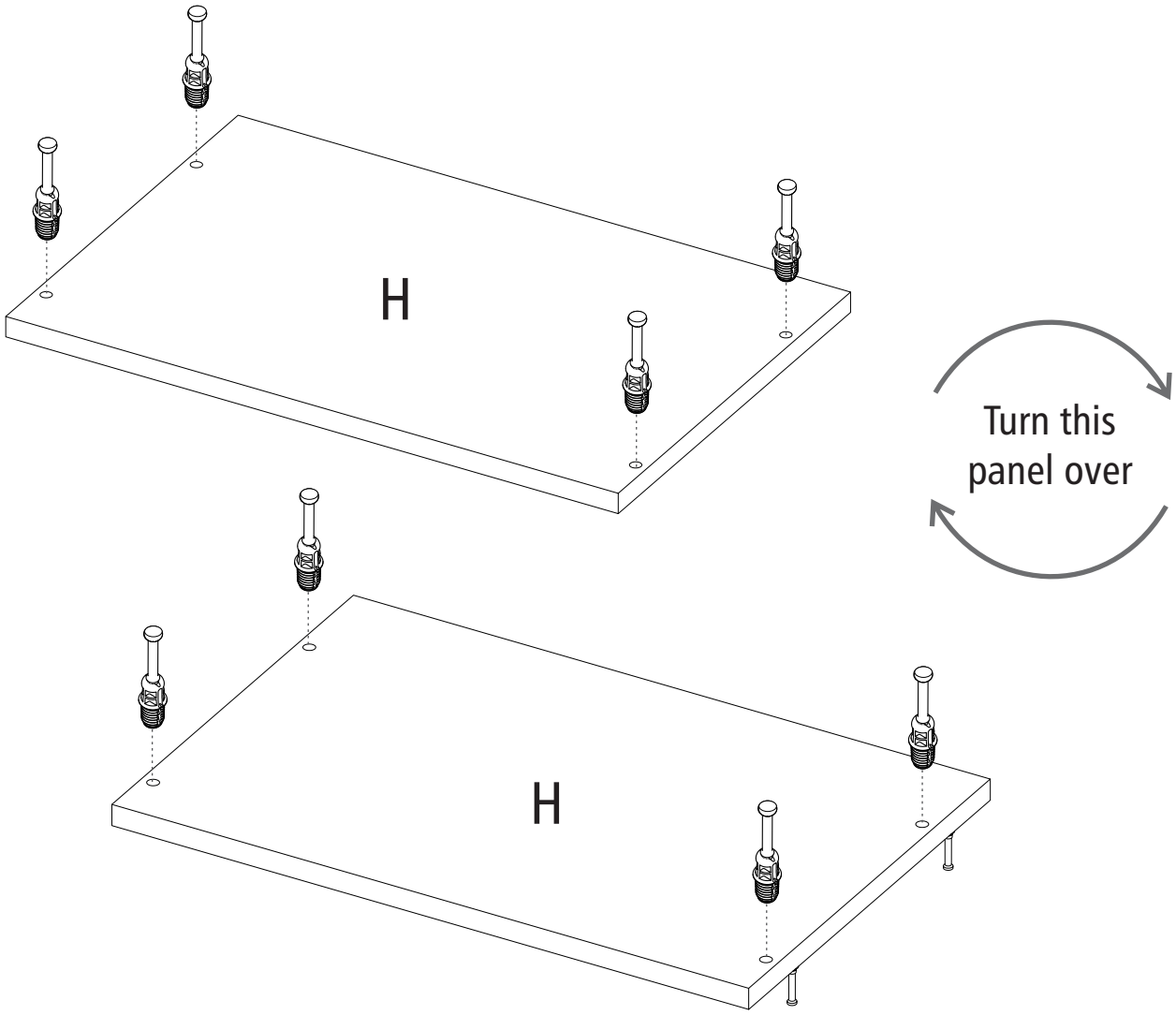

9

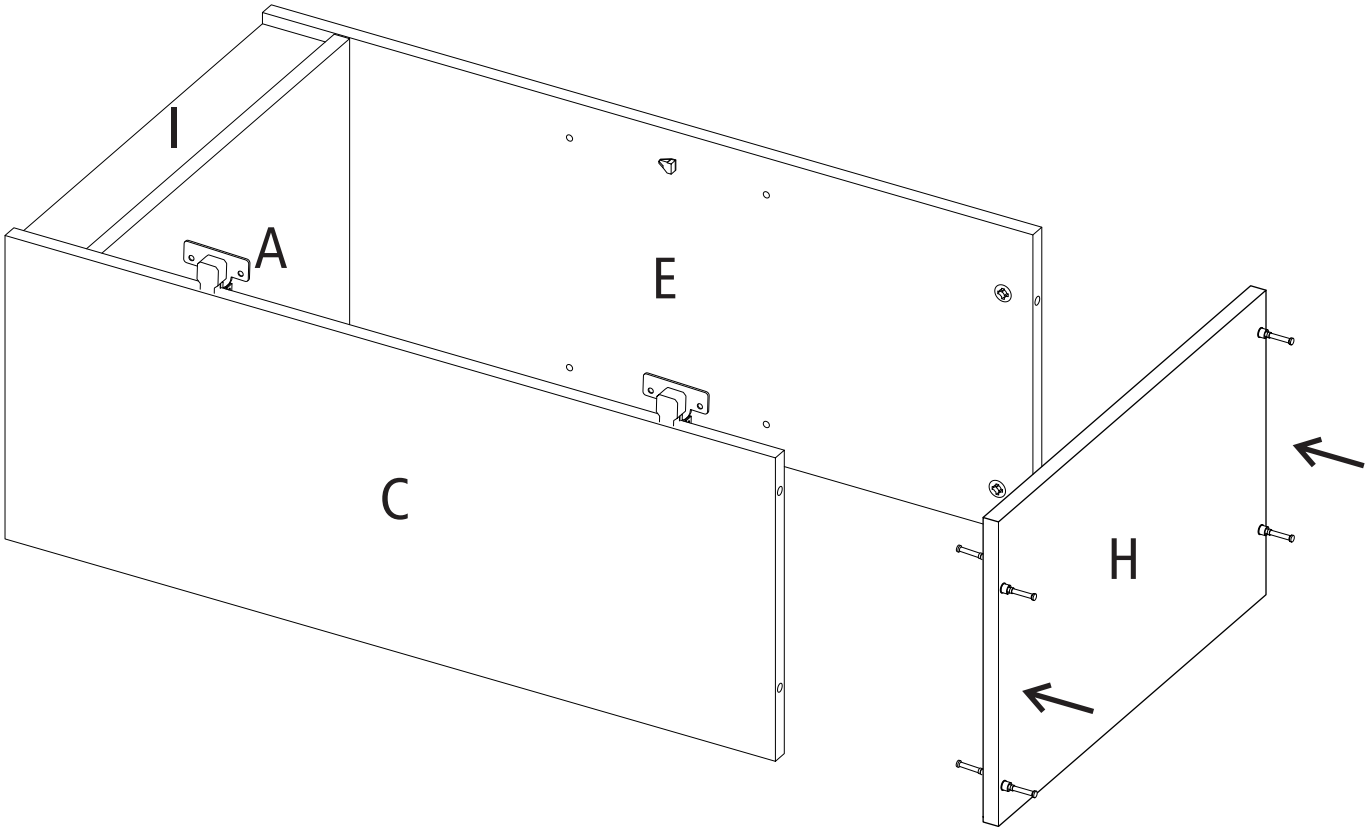

10

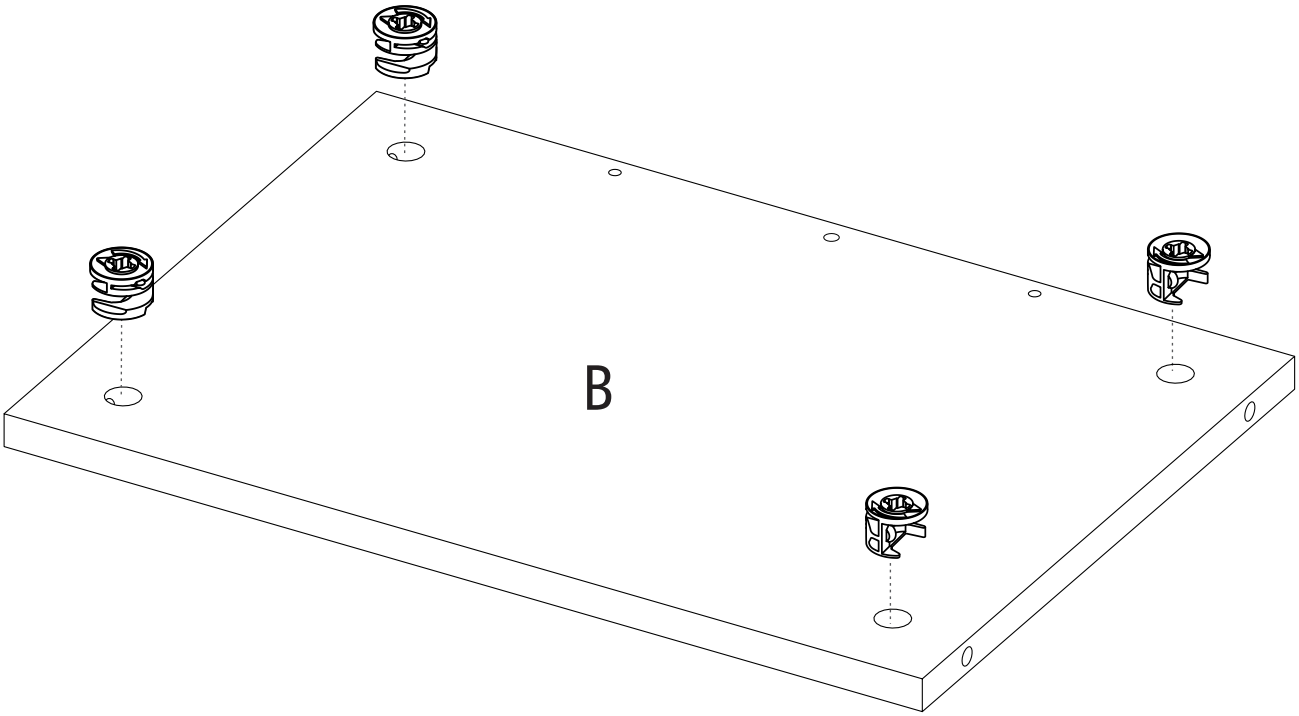

11

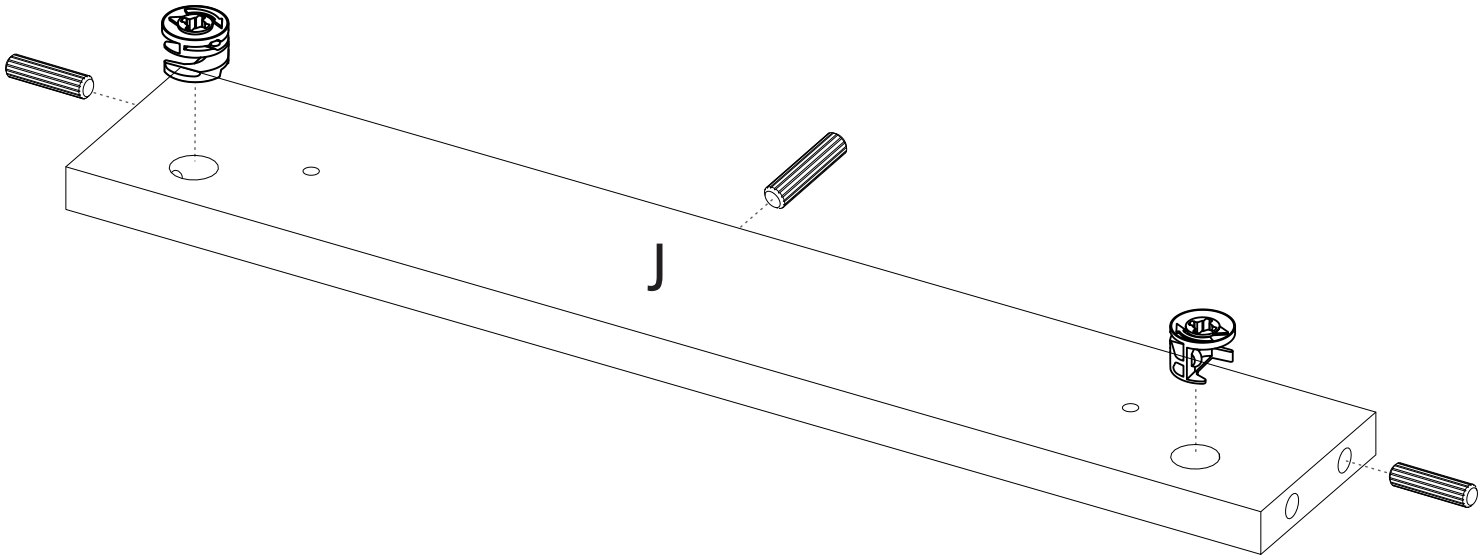
J

12

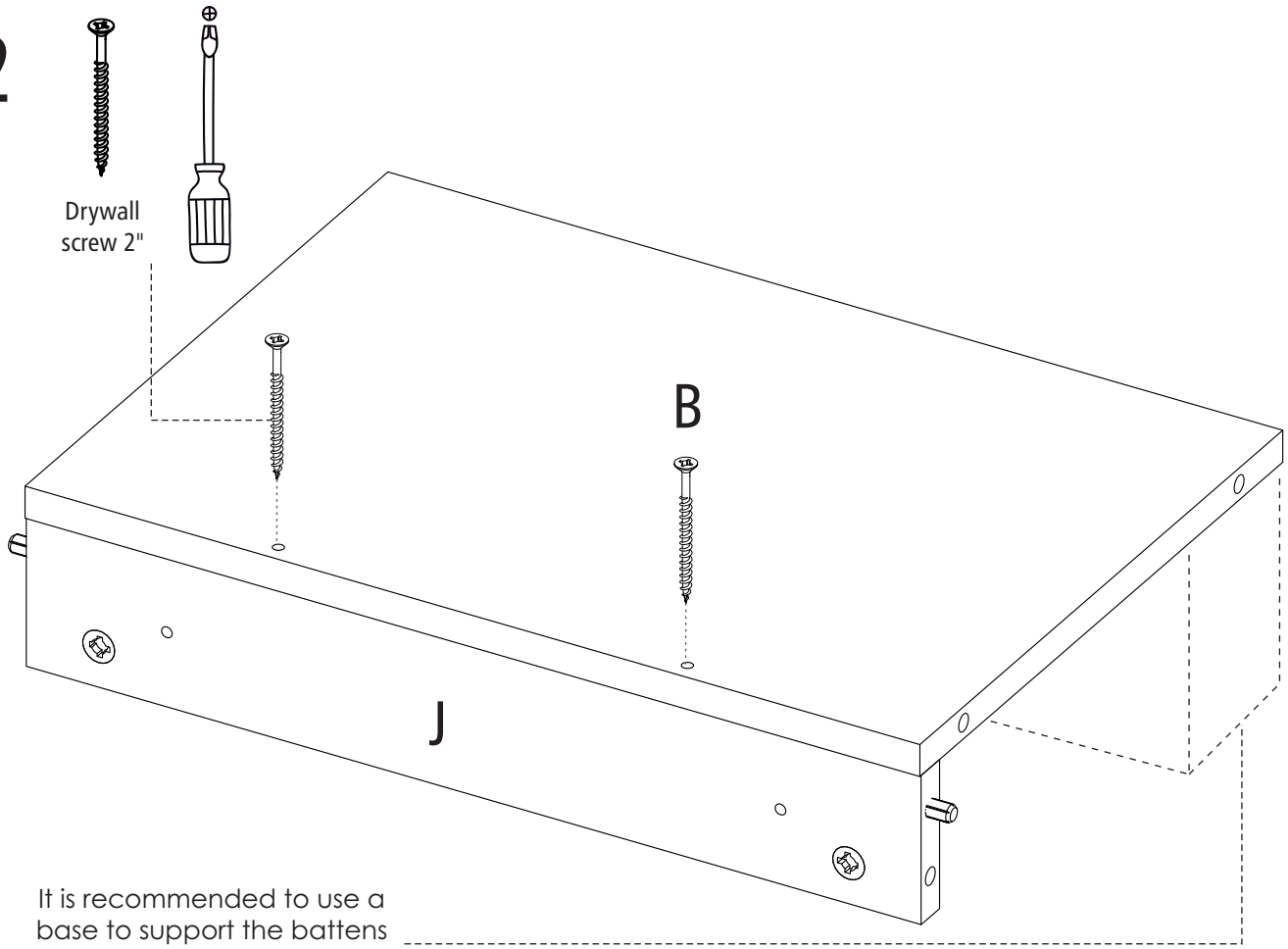
Drywall
screw 2"
B
J
It is recommended to use a
base to support the battens
while installing the pieces.

13

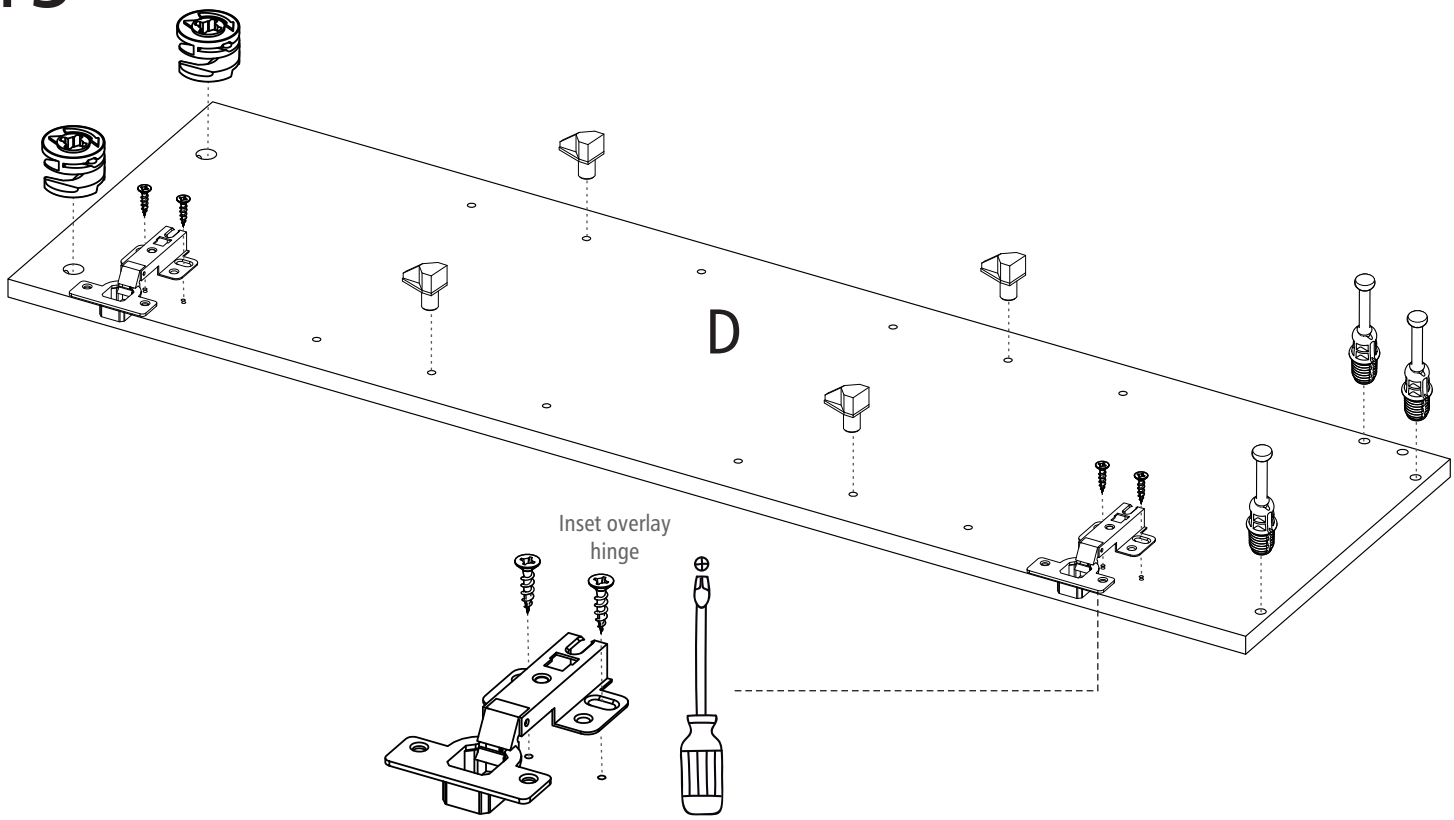

14

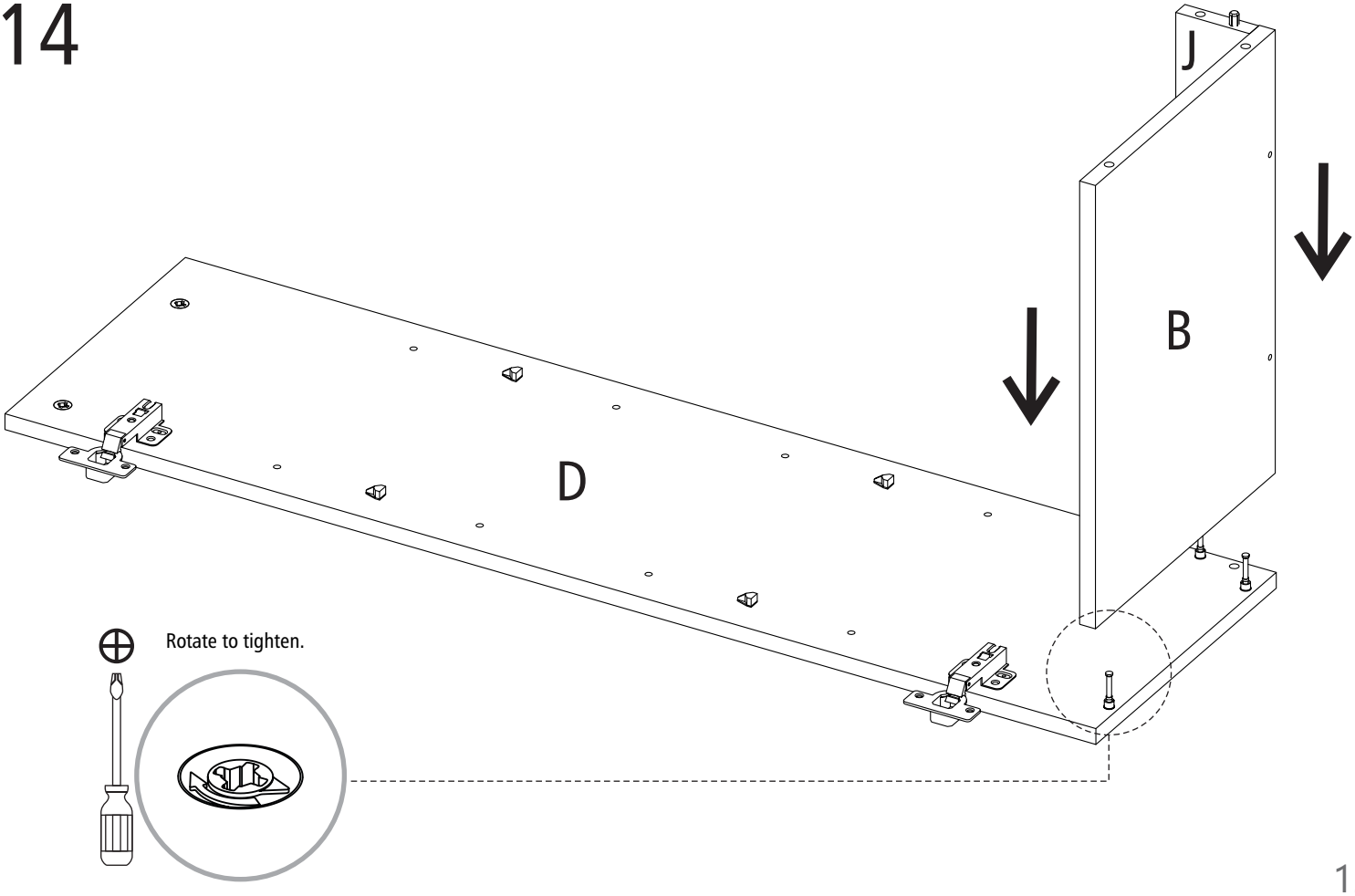

15

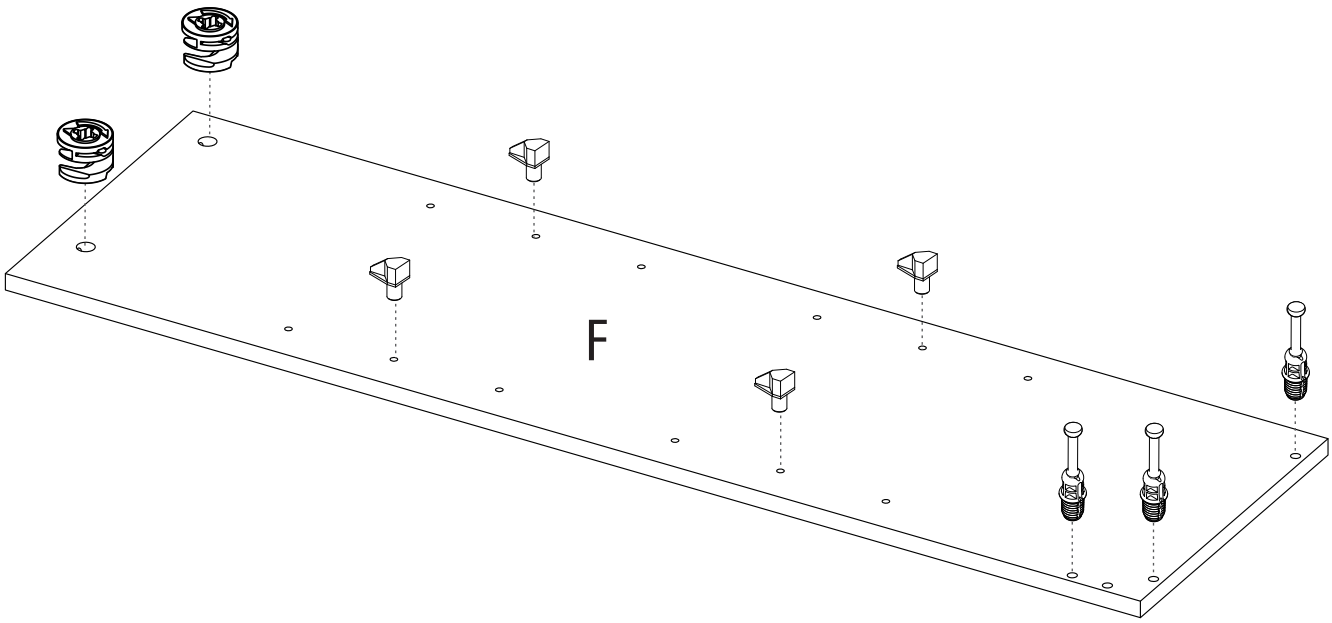

16

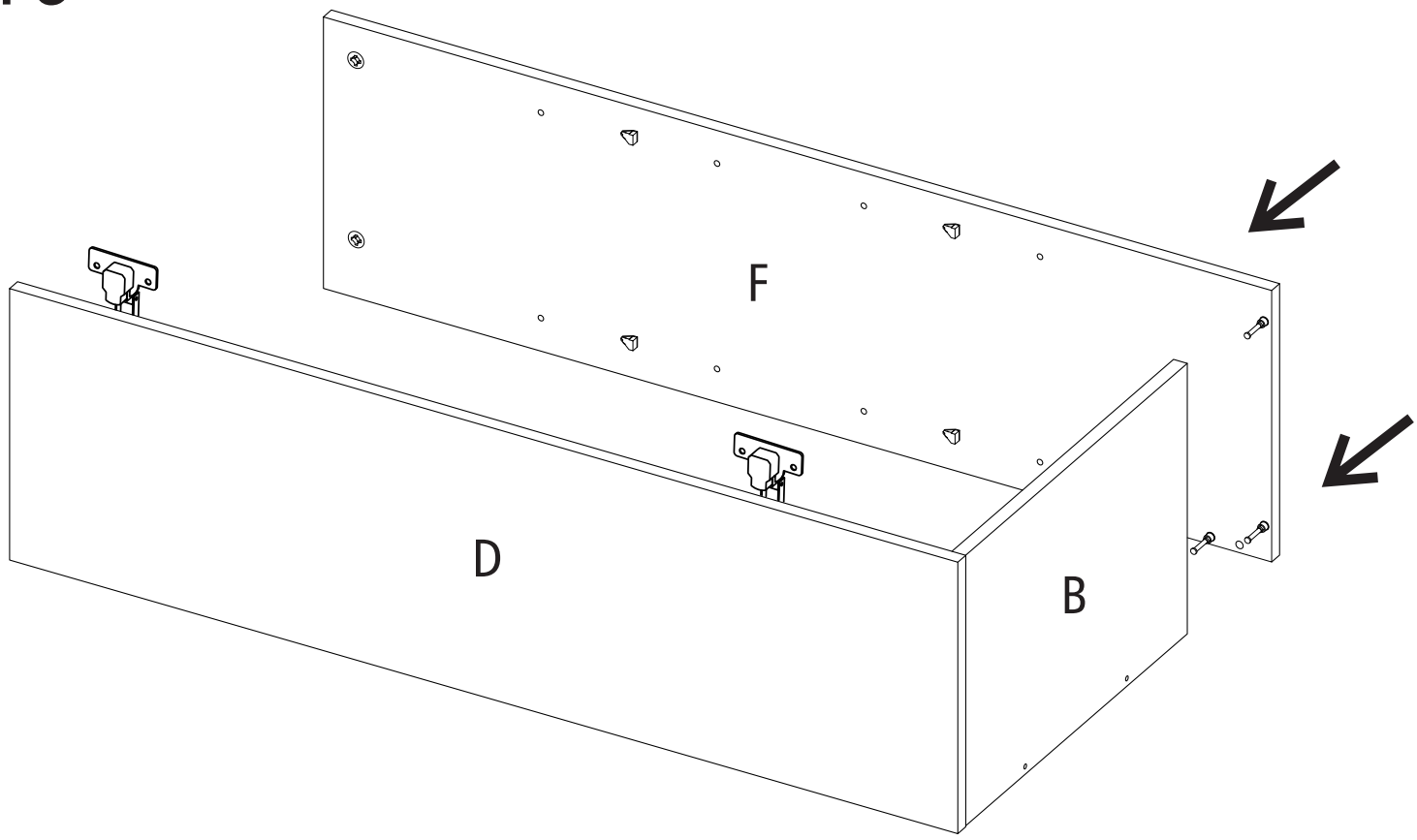

17

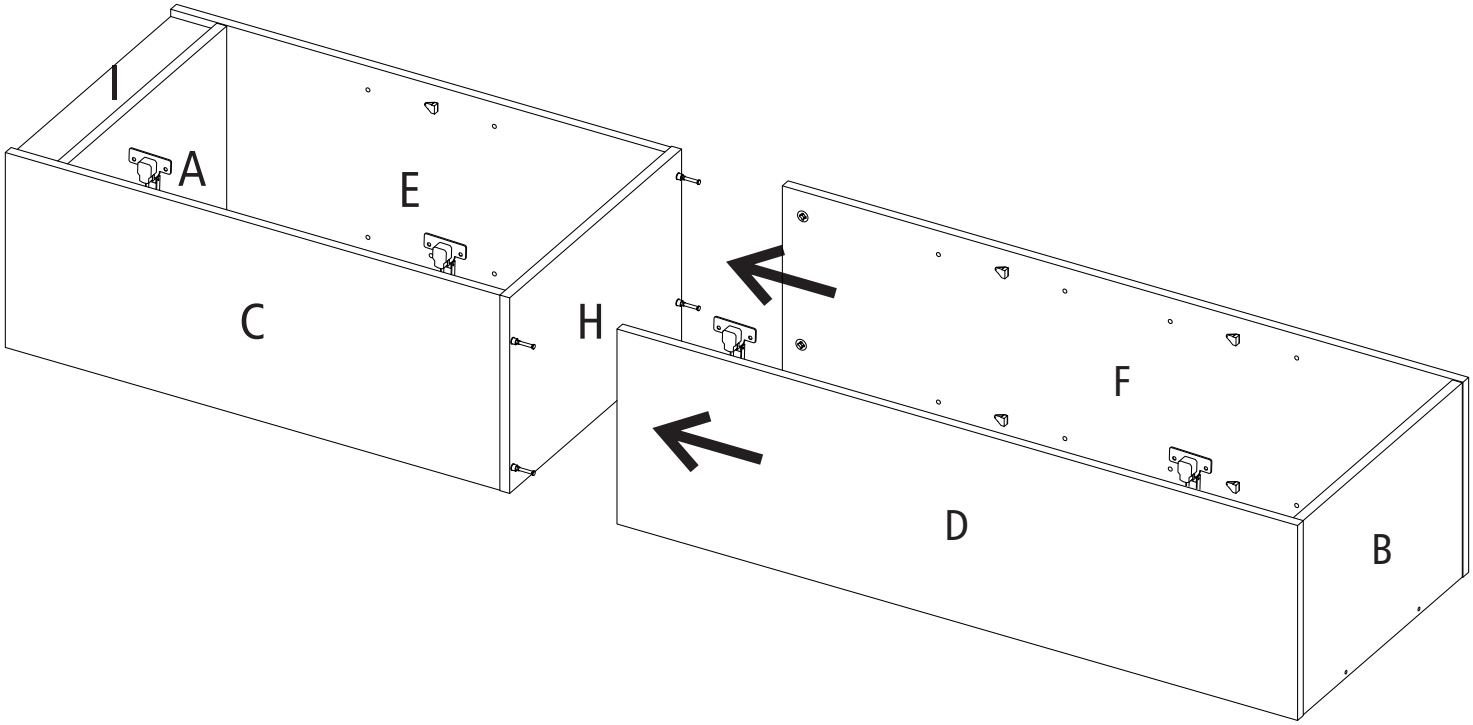
I
A
E
C
H
F
D
B

18

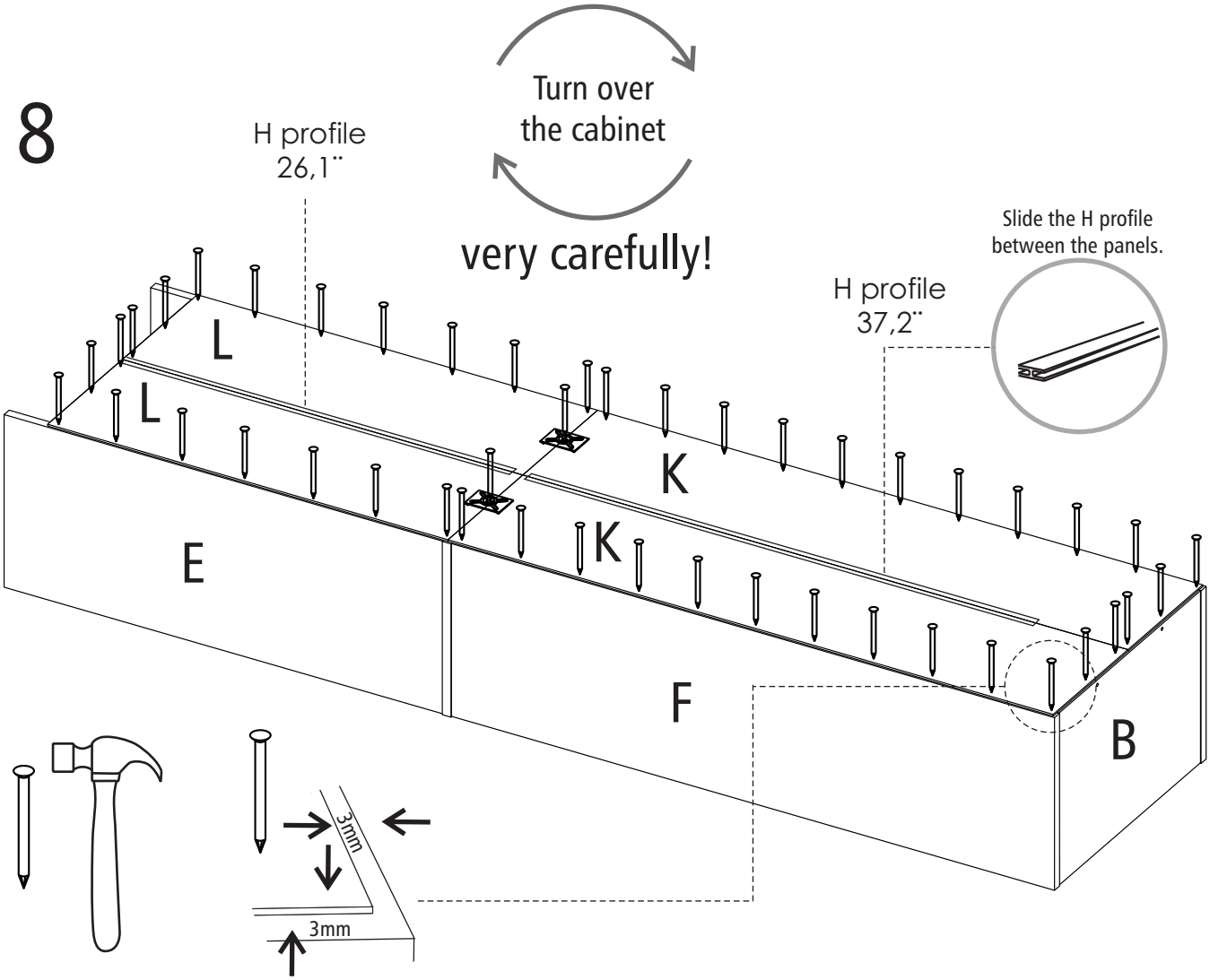
Turn over
the cabinet
very carefully!
H profile
26,1¨
H profile
37,2¨
Slide the H profile
between the panels.
L
L
K
K
E
F
B
3mm
3mm

19

CHAZOS

Fix your bookcase to the wall

1 On the wall, measure and mark the points shown below.

2 Drill on the markings with a 5/16" drill bit.

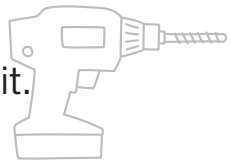

3 Insert the wall anchors inside the drillings.

4 Place the cabinet and secure it with the screws.

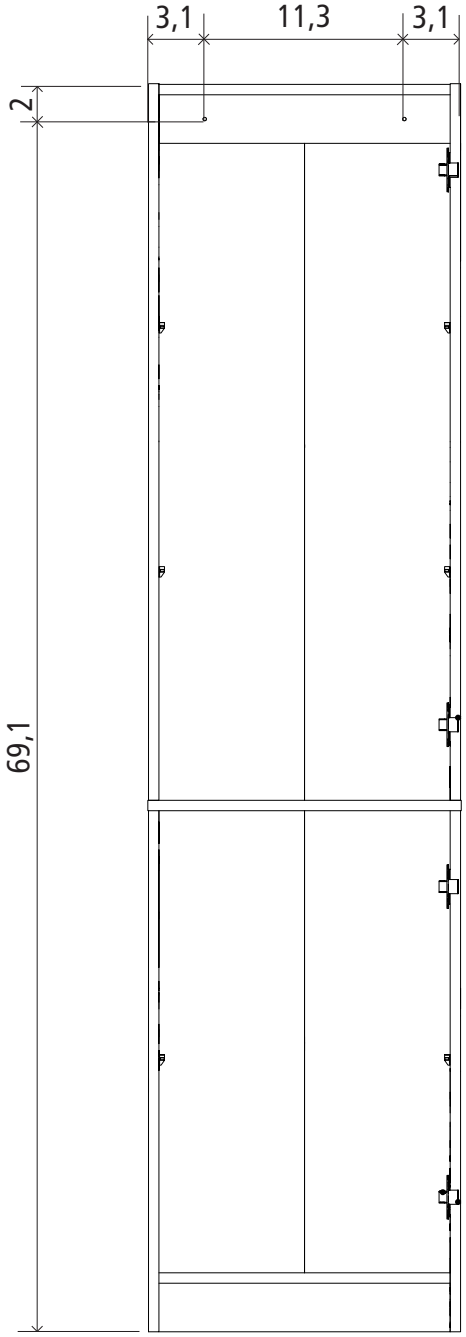

*Dimensions in inches

20

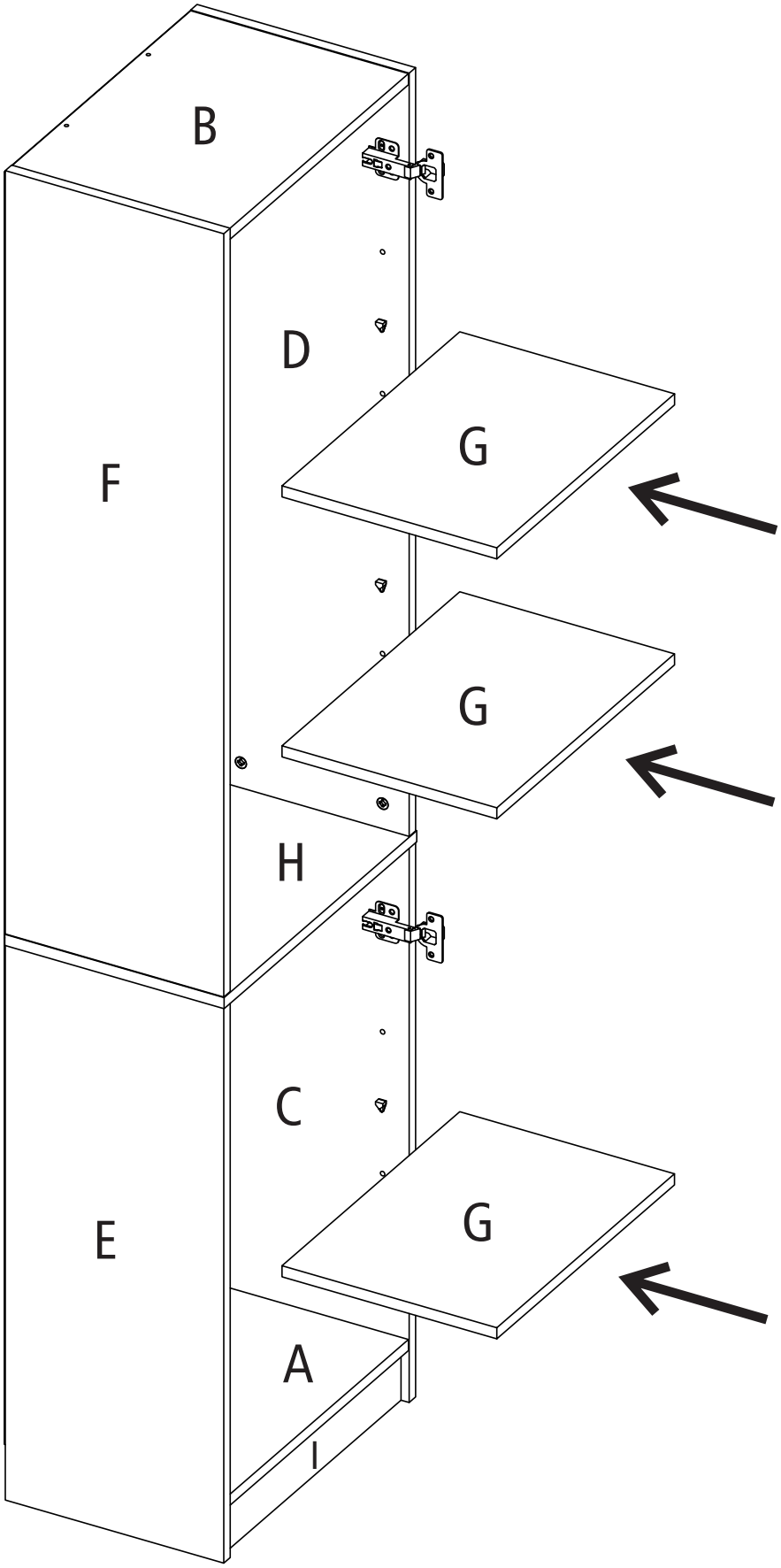

21

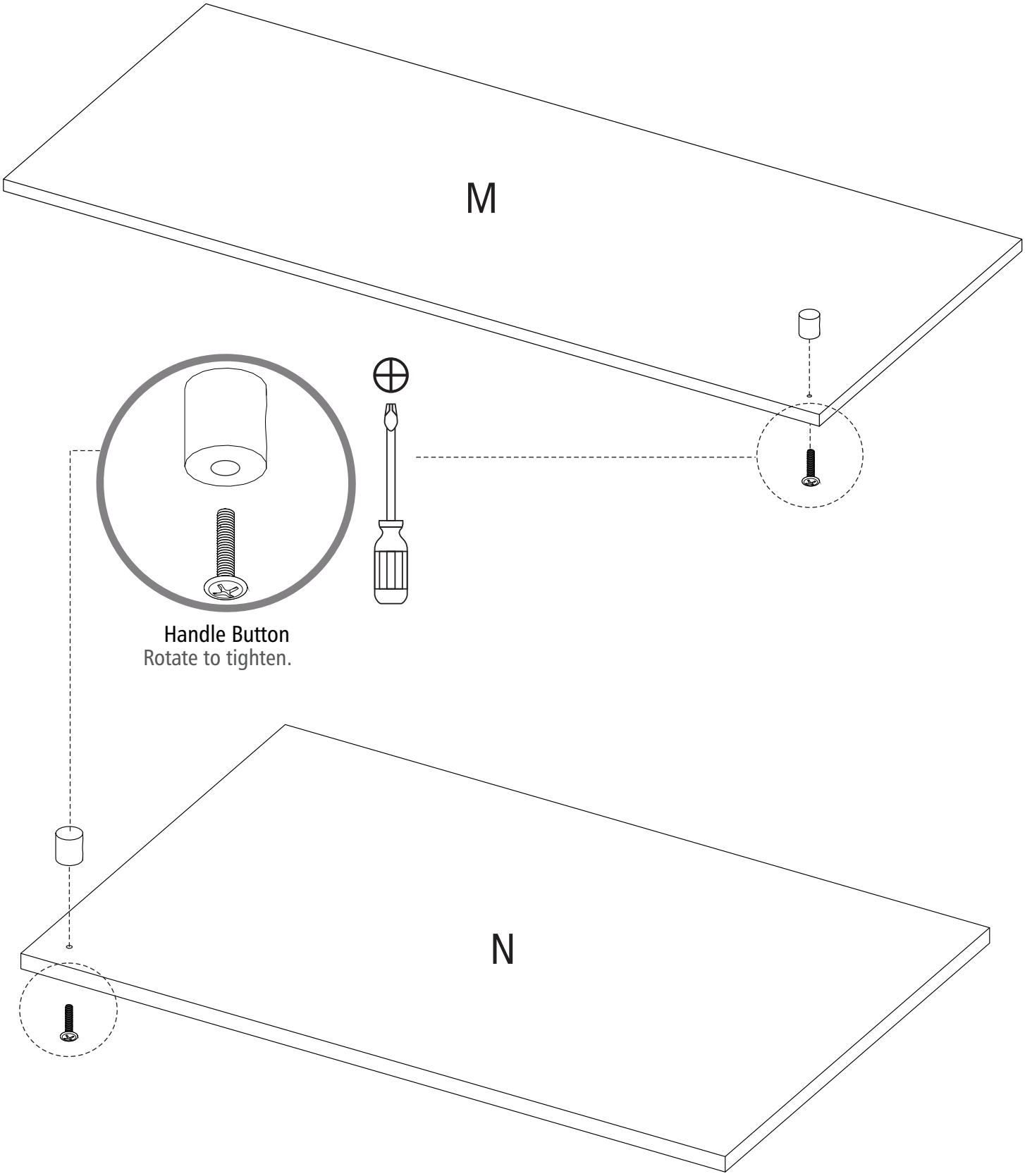

22

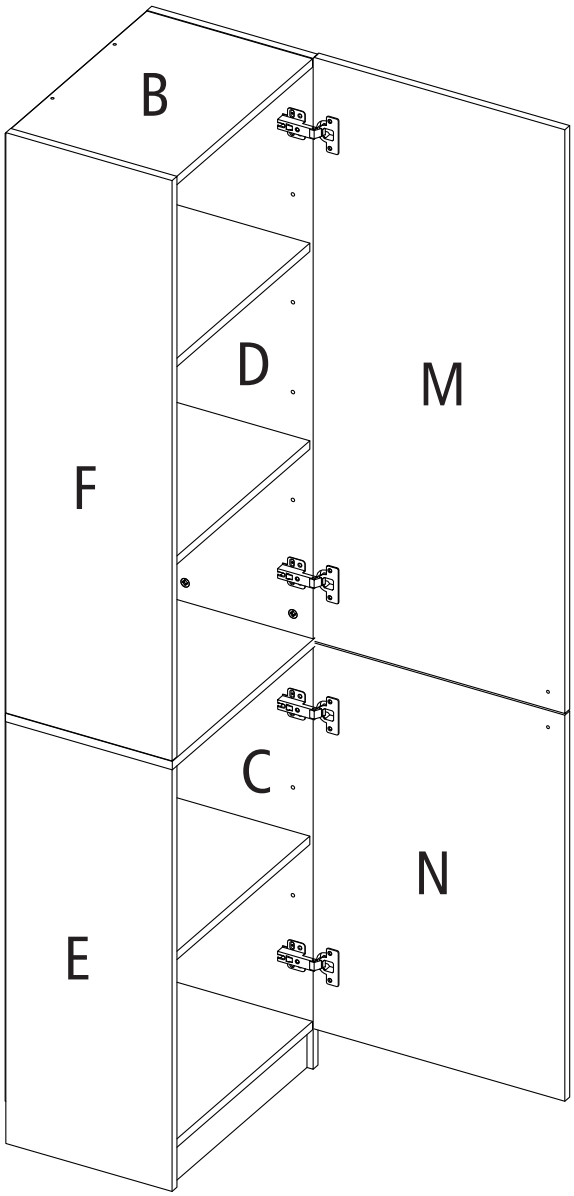

Hinge adjustment

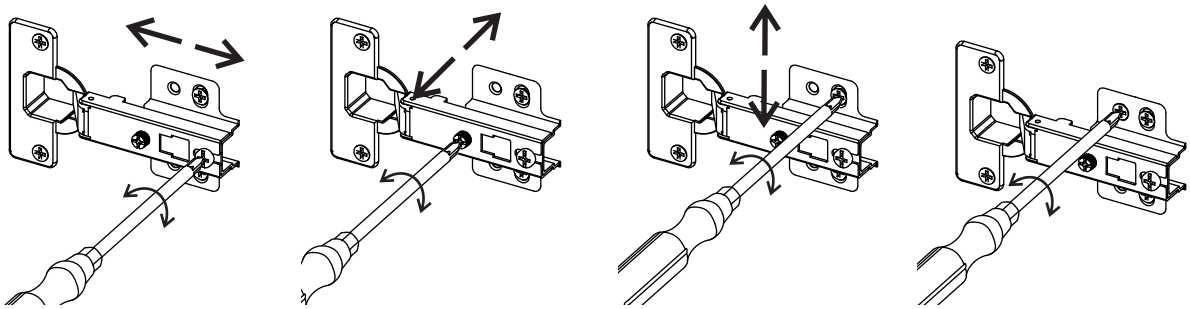

Depth adjustment | Lateral adjustment | Height adjustment | Front screws adjustment

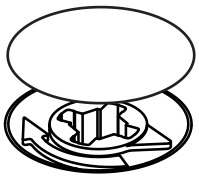

After adjusting all the Minifix cams, cover them up with the cover caps.

After finishing the assembly, lift off al the adhesive letters.

How much weight does my cabinet resist?

Congratulations!
It's done

But don't go yet!

There are some recommendations left for you to take care of your cabinet correctly from now on.

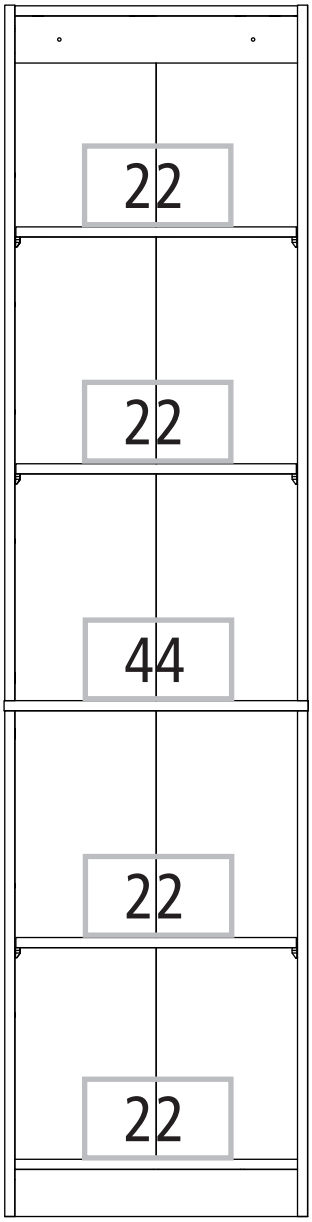

*weight in pounds

SUPER IMPORTANT!

We suggest fixing the cabinet to the wall, so we can avoid the cabinet tipping and harming anyone.
Be specially careful with the kids.

Taking care of your cabinet:

- Do not paint the cabinet.
- The cabinet it's exclusively for indoor spaces. Do not expose it to the direct sun.
- Clean the metallic hardware with a dry cloth.
- DO NOT overload the cabinet (see suggested loads)
- Do not hit or hammer the cabinet (only when indicated here).
- Clean it with thinner, a soft soap solution or simply a damp cloth.
- Don't drag the cabinet, lift it up with other people.
- Avoid direct contact with water, fire or exposing it to high heat.

Cabinet panels

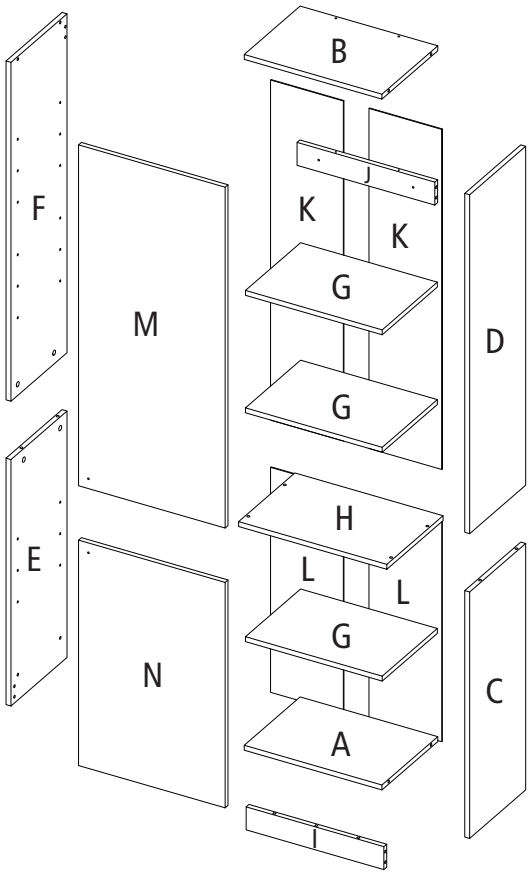

WARRANTY POLICY

Furniture has a 1 year warranty coverage in wooden parts and hardware pieces since its manufacturing date, which you can see in the lot number printed on the product box and the assembly instructions leaflet.

Warranty covers materials and workmanship imperfections which impair the assembly or correct functioning of the cabinet.

This warranty is not valid if the defects or imperfections are caused by the incorrect following of the assembly instructions, warnings and recommendations, misuse, intentional damage, fire or flood, or after modifications or any kind of alteration, or repaired by someone not authorized, when itś been assembled 3 months after the date of purchase. These defects MUST be reported before the warranty coverage period ends. Once the product has been assembled, the company will not be responsible for defective and/or damaged parts.

This warranty is ONLY valid for the ORIGINAL PURCHASER, it doesn't apply if the product has been resold, rented, etc.

Furniture will take no liability for incidental or consequential damages caused to or by the product (This may not apply in your state).

To make this warranty valid you must write to our customer service email describing the product defect, lot number and submitting your sales reciept or proof of purchase, or contact us at our customer service line. Replaced parts will be under the productś original warranty coverage period. Damaged parts will become property of the company.