Instruction Manual
Marlon 140cm Oval Dining Table

www.laura-james.co.uk

1702089.11

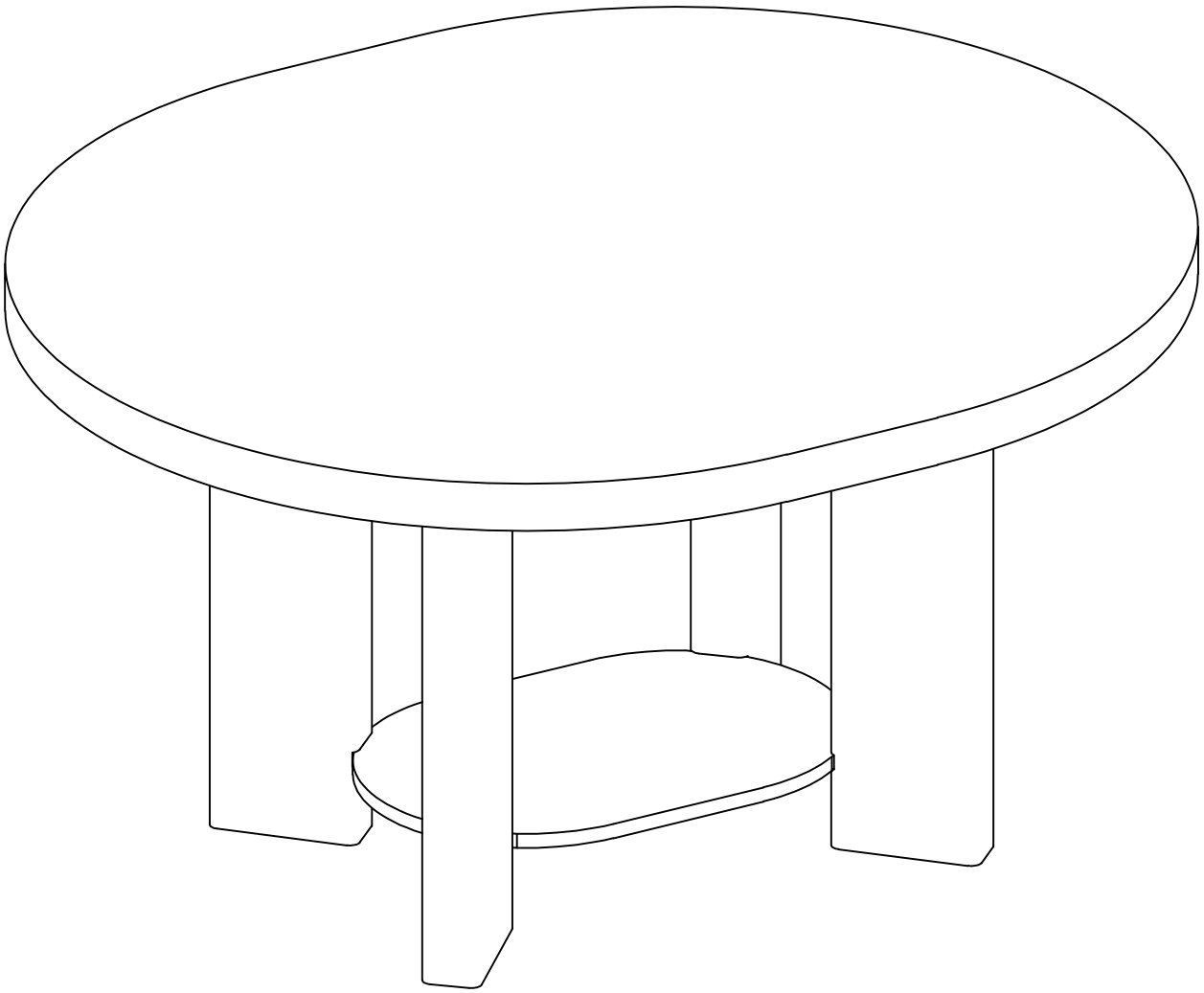

CONTENTS

Safety and care advice 1

Components 2

Assembly instructions 4

Copyright 6

⚠ SAFETY AND CARE ADVICE ⚠

PLEASE READ THESE INSTRUCTIONS CAREFULLY AND KEEP FOR FUTURE REFERENCE

Warning: This unit weighs approximately 20kg. Please lift with care.

·Check you have all the components and tools listed on pages 2 and 3.

·Remove all fittings from the plastic bags and separate them into their groups.

·Keep children and animals away from the work area, small parts could choke if swallowed.

·Make sure you have enough space to layout the parts before starting.

·Do not stand or put weight on the product, this could cause damage.

·Assemble the item as close to its final position (in the same room) as possible.

·Assemble on a soft level surface to avoid damaging the unit or your floor (use opened out unit carton).



·We do not recommend the use of power drill/drivers ***for inserting screws***, as this could damage the unit. Only use hand screwdrivers.

·Dispose of all packaging carefully and responsibly.

CARE AND MAINTENANCE

·Only clean using a damp cloth and mild detergent, do no use bleach or abrasive cleaners.

·From time to time check that there are no loose screws on this unit.

·This product should not be discarded with household waste. Take to your local authority waste disposal center.

***Note**: If required the next page can be cut out and used as reference throughout the assembly. Keep this page with these instructions for future reference*

COMPONENTS

Please check you have all the panels listed below:

2 PERSON ASSEMBLY RECOMMENDED

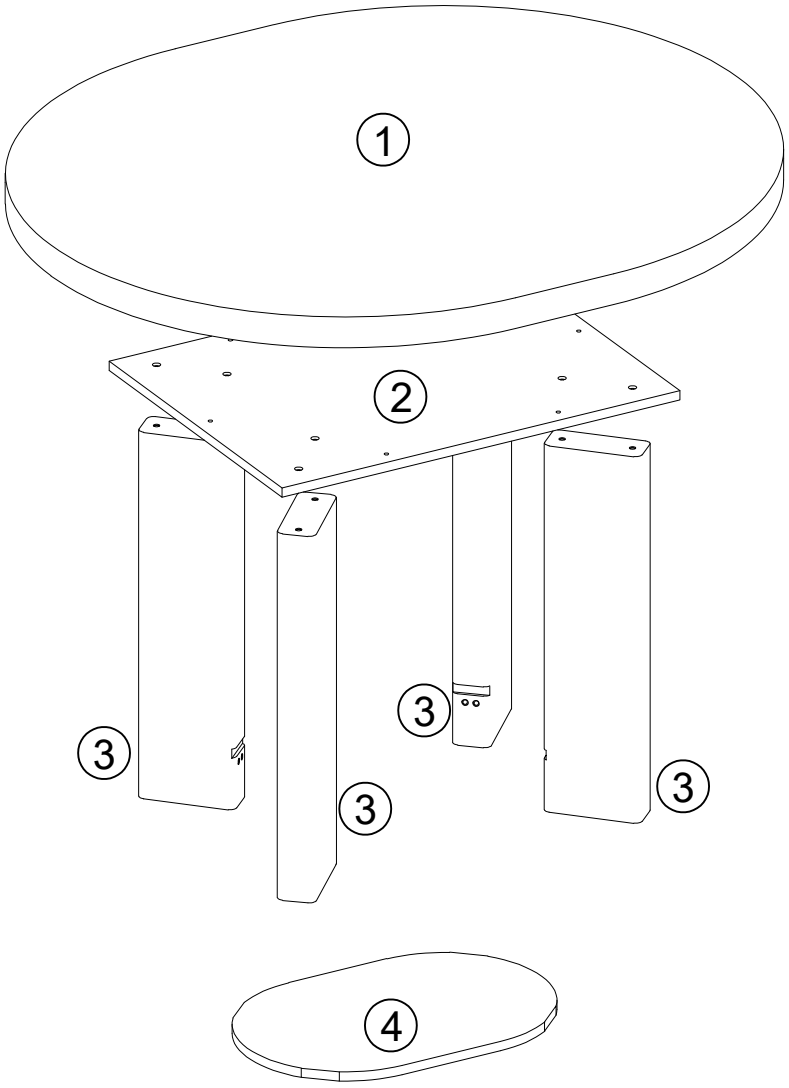

PARTS LIST

1	Table Top	x1
2	Table Top Support	x1
3	Legs	x4
4	Shelf	x1

COMPONENTS

Please check you have all the fittings listed below:

A 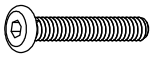

Allen bolt (M6x25MM) x 14

B 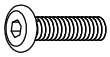

Allen bolt (M6x15MM) x 16

C 

Allen key (M4) x 1

D 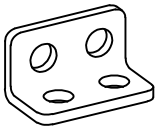

Bracket x 4

ASSEMBLY INSTRUCTIONS

Step 1

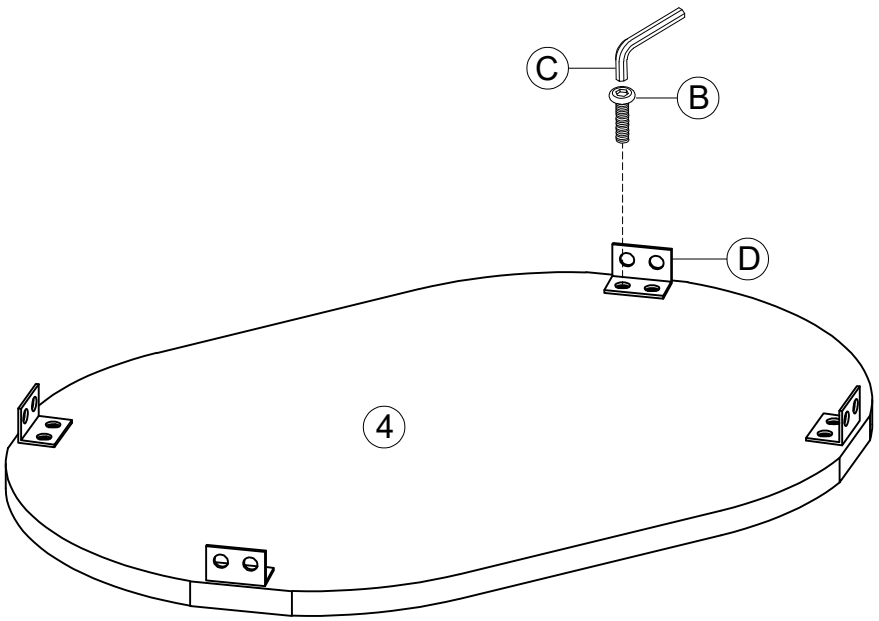

Step 2

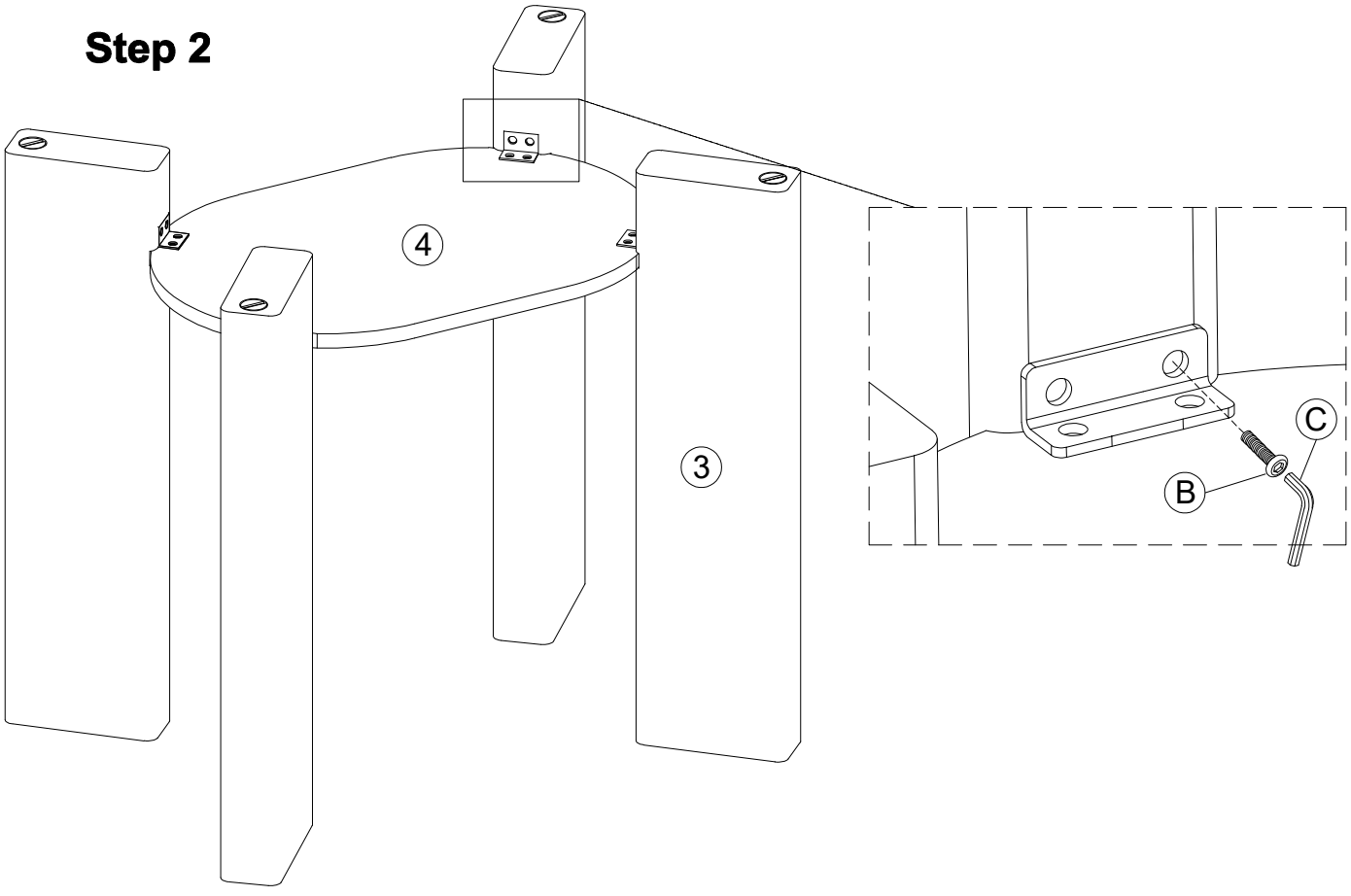

ASSEMBLY INSTRUCTIONS

Step 3

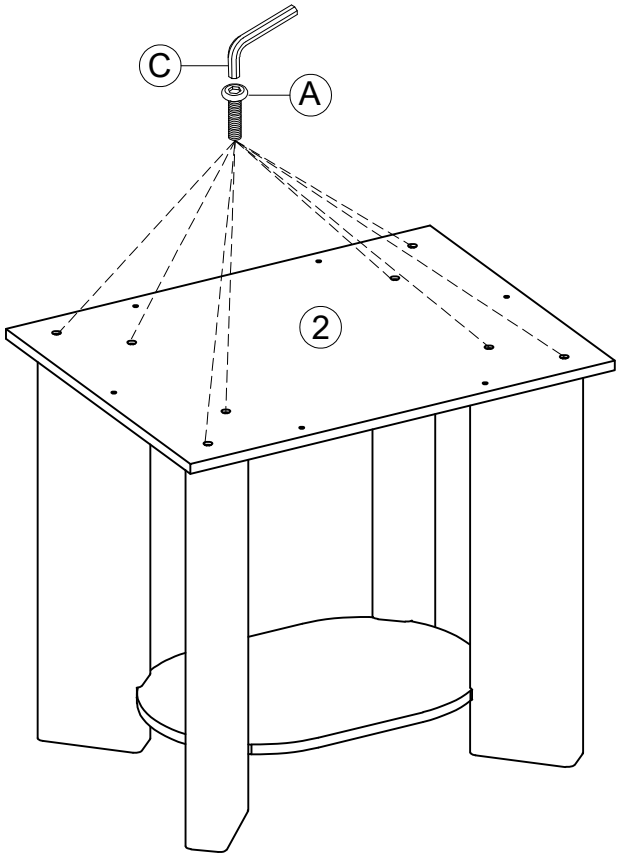

Step 4

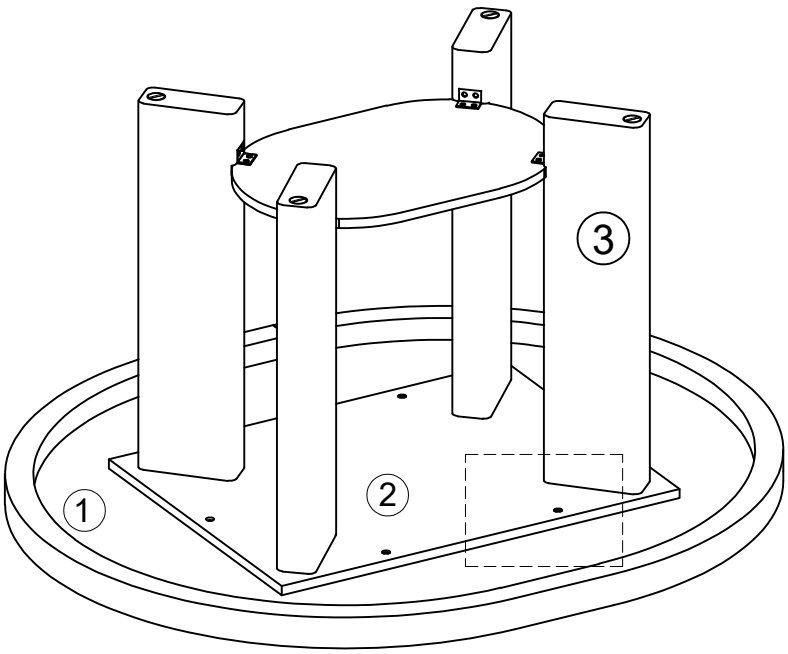

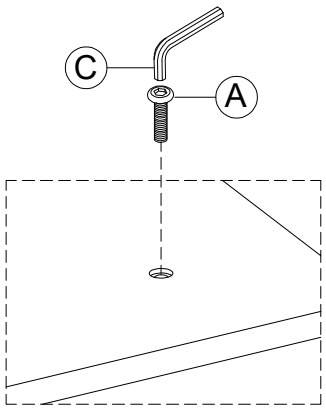

ASSEMBLY INSTRUCTIONS

Step 5

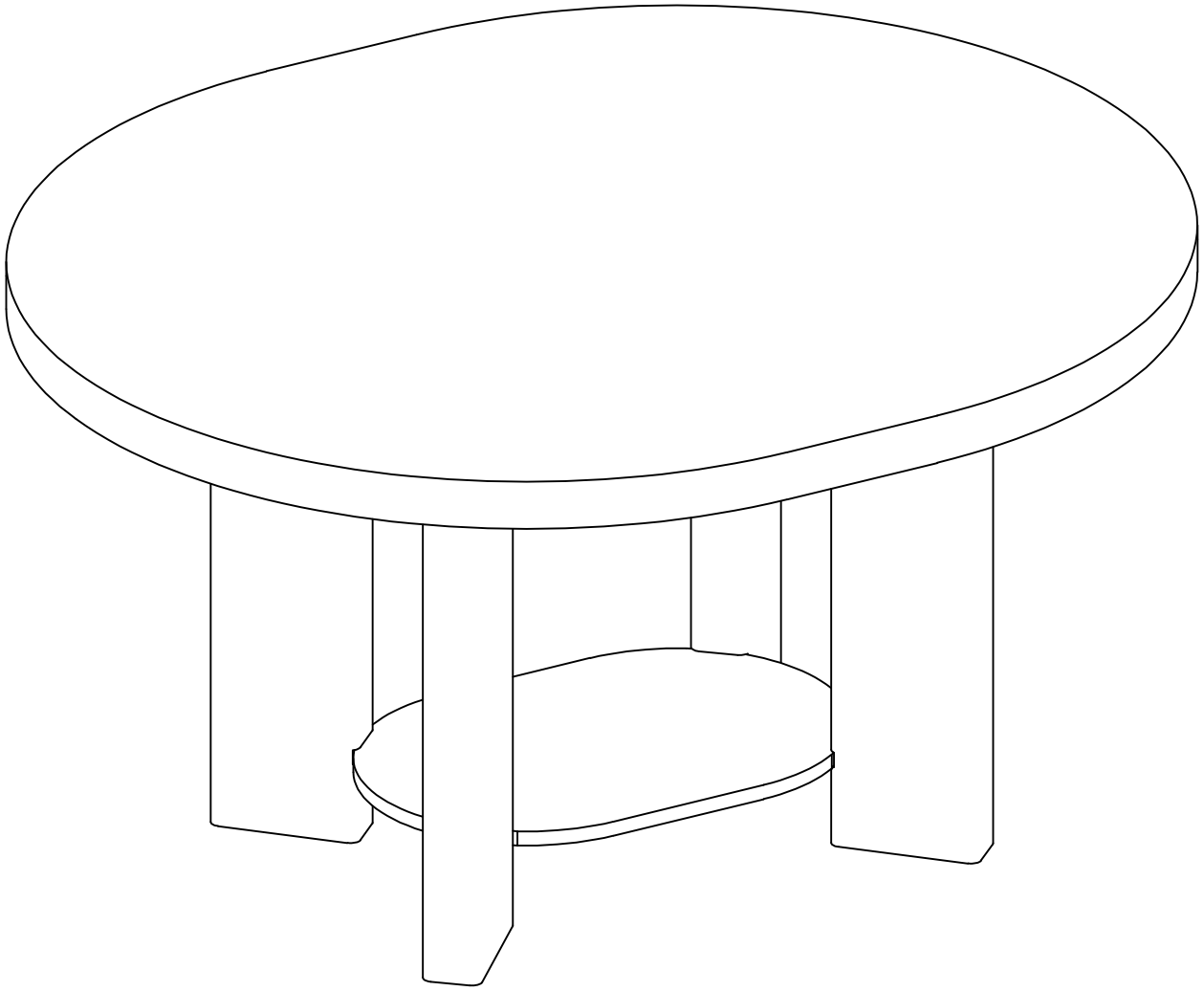

Congratulations! Now you have finished assembling the product.

IF YOU FIND A DEFECTIVE PART

We fully stock all parts and components. Any defective part can be quickly replaced. Take note of the defective part number in manual and we will arrange a quick replacement.

You can email our team at *customercare@laura-james.co.uk*

COPYRIGHT

All material in this instruction manual is copyrighted by AGTC Ltd.

Any unauthorised use may violate worldwide copyright, trademark and other laws.

Thank you for purchasing!

Laura James® is a registered trademark of AGTC Ltd.
Made in Vietnam for AGTC LTD S35 9ZX