ASSEMBLY INSTRUCTION FOR

Detta Ottoman

Components

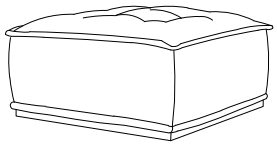

A

X1

Hardware

B		2	
C		2	M6
D		2	M6
E		2	M6×25
F		1	

Assembly Instructions

Step1

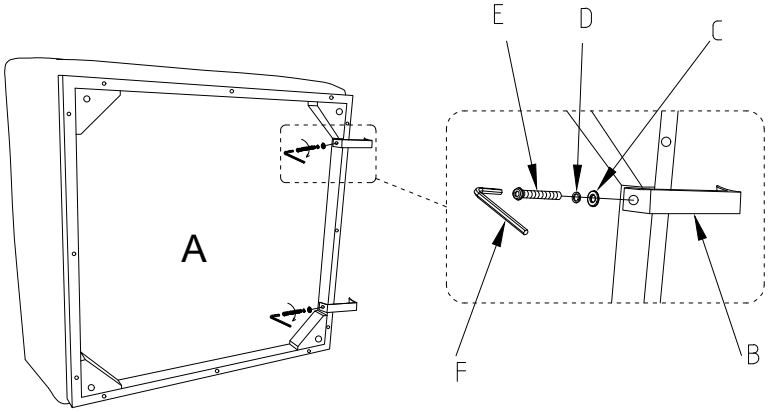

Step2

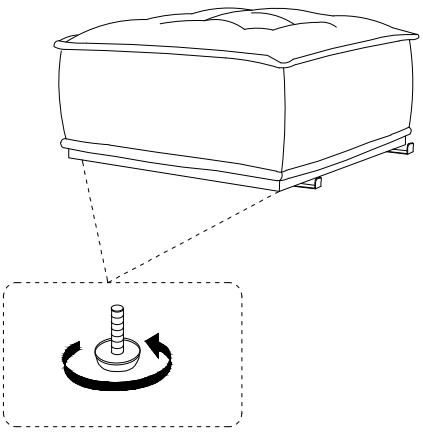

Adjust the levelers as need

Step3

