Sofa

Assembly Instruction - Please keep properly for future reference.

If you find any missing boxes, damaged parts, or accessory shortages, please contact the customer service team of your purchasing channel immediately. We will resolve the issue as quickly as possible.



CONTACT US

- **Email: service@grandtunnel.com**
  In order to receive assistance more quickly, please provide

THE FOLLOWING INFORMATION:

- Order number
- Purchase platform
- Purchase date
- Detailed description of the issue along with photos if applicable

Important – Please read these instructions carefully before starting the installation.

EN

Before Assembly

Thank you for choosing our product!
To ensure a smooth installation process, please read this guide carefully to familiarize yourself with the required tools, materials, and installation steps.
Follow the relevant sections to avoid any damage caused by improper installation, and make sure to review all operation and safety guidelines for correct installation procedures.

Packaging Notice:

1. Multi-Box Shipping Notice

This product is packaged in multiple boxes for shipping and may arrive in batches at different times. To ensure a smooth assembly process, please make sure all boxes are received before unpacking and starting the assembly.

2. Box and Packaging Verification

Each box is labeled with a corresponding number. Please refer to the packing list on the next page of this manual to verify that all boxes have been received.

If you find any missing boxes, damaged parts, or accessory shortages, please contact the customer service team of your purchasing channel immediately. We will resolve the issue as quickly as possible.

Installation Information

- All information in this guide is based on the product's condition at the time of printing. We reserve the right to modify product features, packaging, or availability without prior notice.
- Before installing the furniture, ensure that all necessary electrical or environmental preparations are completed.
- This manual contains important instructions on installation, cleaning, and maintenance. Please read it thoroughly and keep it for future reference.

Pre-Installation Checklist

1. Carefully inspect the new product for any damage or defects.
2. Ensure installation is carried out on a clean, flat surface to maintain balance and stability.

Email : **service@grandtunnel.com**

3. Avoid prolonged exposure of the product to damp environments or direct sunlight.
4. Handle with care during installation. Use protective materials (e.g., soft pads) to prevent scratches.
5. For any questions or technical support, refer to the customer service guide and contact the seller's customer service.

Usage and Maintenance Recommendations

1. Clean furniture regularly to maintain hygiene and prevent bacteria growth. Use a damp cloth that has been wrung out to avoid scratching the finish.
2. Avoid contact with acidic or alkaline corrosive liquids.
3. Do not use unauthorized replacement parts. For replacement parts, contact the manufacturer or distributor.
4. Do not machine wash or rinse any part of this product with water.



Safety Warnings

1. Warning Labels:

Do not remove warning labels on the product or packaging, and always follow the related instructions.

2. Regular Inspections:

Regularly check all parts of the product to ensure they are correctly installed, undamaged, and all connectors are securely tightened.

3. Safe Use:

Do not play on or under the sofa, and strictly avoid jumping or any actions that may harm the sofa or users.

4. Rope Hazard:

Do not attach ropes, hooks, straps, or other unintended items to any part of the product.

5. Guide Preservation:

Retain this manual for future reference.

6. Supervisory Responsibility:
Safety is a shared responsibility between the manufacturer and the user. Always adhere to safety guidelines when using the product.

Disclaimer

We are committed to providing safe and reliable products. If you have any questions about this product or require additional support, please contact our customer service team. We are here to assist you.

Customer Service Guide



Thank you for choosing our product! We are committed to providing you with excellent service. If you find any missing parts, damaged packaging, or product damage after receiving all packages, please follow the steps below to quickly contact our customer service team. We will do our best to resolve your issue.

1. Missing Parts

Verify Parts:

1. Refer to the “Parts List” in the manual to verify the name, specifications, and quantity of the missing parts.
2. Take a clear photo of the parts list and mark the missing parts with detailed information, e.g., “Missing 5 pieces of M6×30mm screws.”

Contact Us:

By Email:
Send an email to **service@grandtunnel.com**, with the subject line “Missing Parts Issue.” Include the following in the email:

- A description of the missing parts and a photo of the parts list.
- Order details (order number, purchase platform, purchase date).

2. Product or Packaging Damage

If it affects normal use:

Steps:

1. Take clear photos or videos showing the damaged parts and the extent of the damage (multi-angle shots are recommended).

2. Email the photos/videos along with order details to **service@grandtunnel.com**, with the subject line “Product Damage Issue.”

Resolution:
After verification, we will arrange for a replacement part, product exchange, or refund as quickly as possible.

If it does not affect normal use:

Steps:
1. Contact our customer service team (by email: **service@grandtunnel.com**).
2. Provide a description of the damage and include relevant photos or videos.

Resolution:
We will provide repair guidance or an appropriate compensation plan based on the specific situation.

Contact Us:

Customer Service Email: **service@grandtunnel.com**

Helpful Tips

To process your issue efficiently, please prepare the following information:

- Order details (order number, purchase platform, purchase date).
- Clear photos or videos.
- We are committed to providing quick and professional solutions, no matter the size of the issue, to ensure your satisfaction.

Thank you for your trust and support!
We hope you enjoy using our product!

EN

Parts List

Box 1

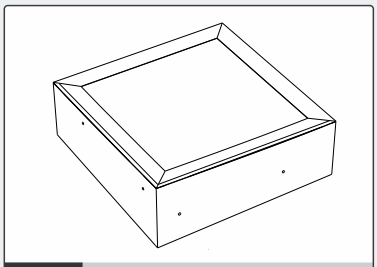

01 x1

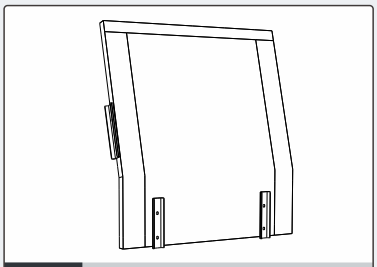

08 x1

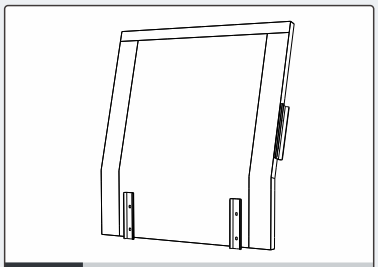

09 x1

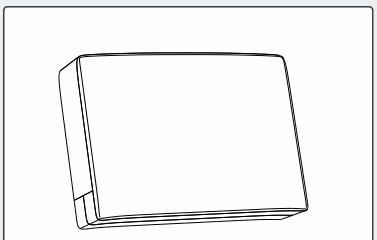

12 x3

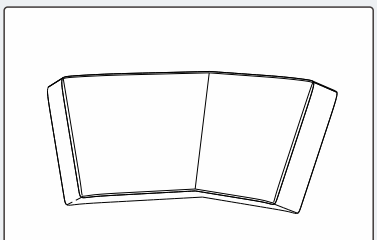

11 ×1

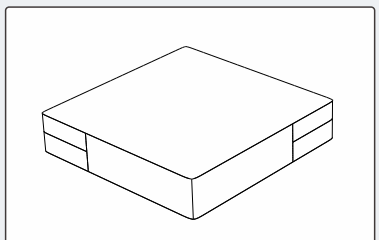

02 x1

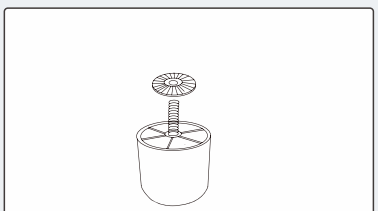

05 x12

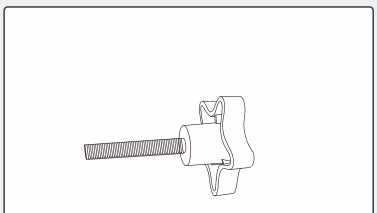

06 x2

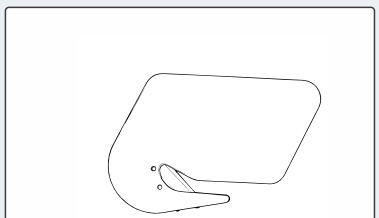

A x1

Email : **service@grandtunnel.com**

Box 1

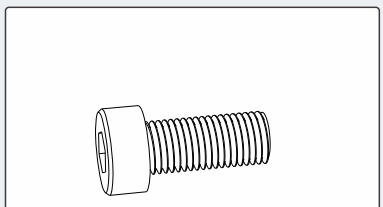

B M6*20 x 14

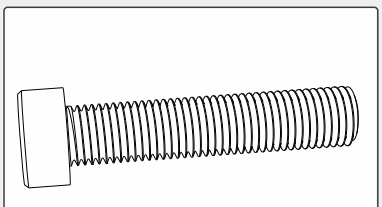

C M6*50 x4

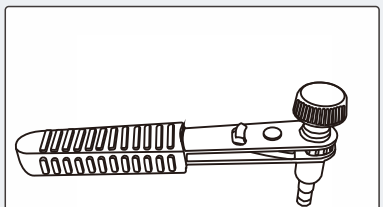

D x1

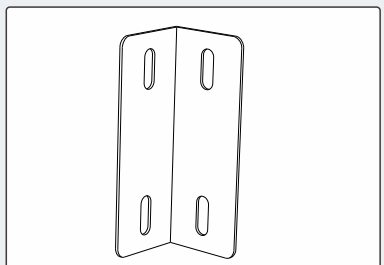

13 x2

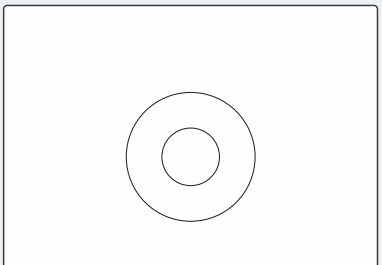

E x4

Wrench usage diagram

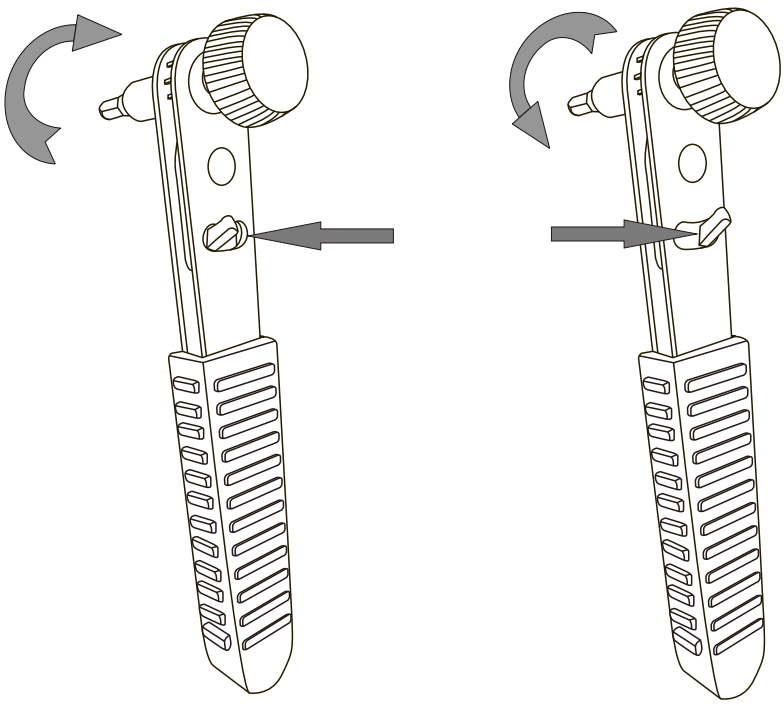

Box 2

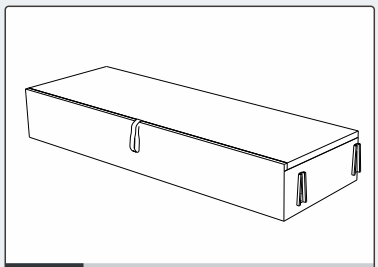

16 x1

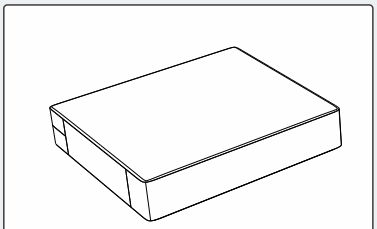

10 x4

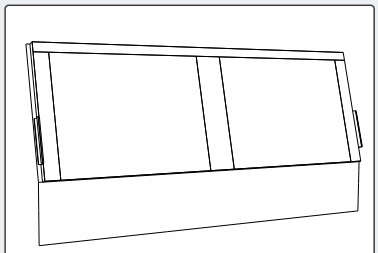

07 x2

Box 3

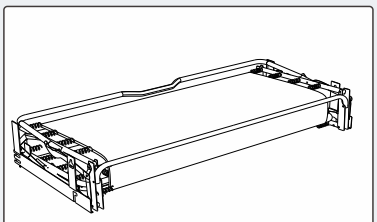

03 x1

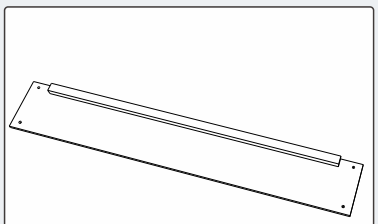

14 x1

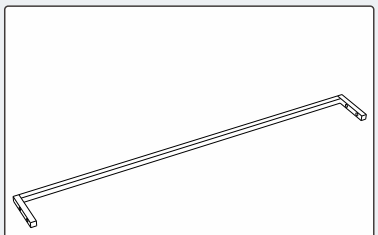

17 x1

Box 4

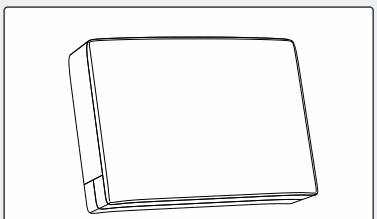

12 x1

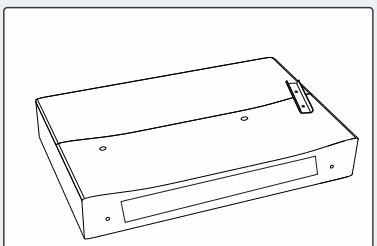

04 x1

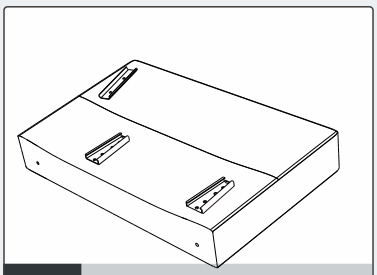

15 x1

Email : **service@grandtunnel.com**

Safety and Care Advice

EN

Important:
Please read these instructions fully before starting assembly.

Thanks for your purchase.
Before assembling, please follow the instructions to check if all the spare parts and screws are intact.

- Considering the size and weight of the sofa, we recommend two adults to assemble the sofa, on a carpeted or padded area, in the room that it is intended for. Approximate assembly time: 40 minutes.
- Please do not throw away any of the packaging or the instruction until all the components and hardware have been checked and the furniture is fully assembled. Please ensure that the packaging is disposed in a safe and environmentally friendly way.
- Keep all components and packaging out of reach of children or animals to avoid the risk of choking or suffocation.
- Please do not take off the cover, and do not wash.

Your cushions come vacuum packed and sealed for shipping. To restore the cushion's original shape, follow the steps below.

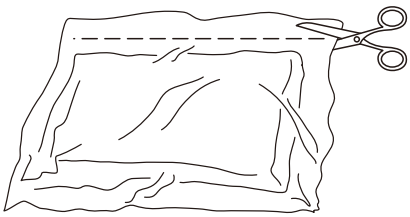

Open the vacuum bag carefully.

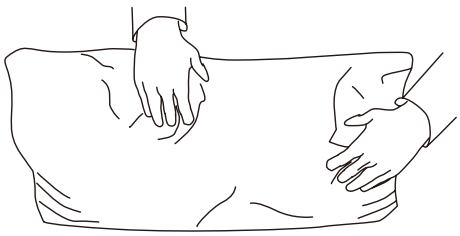

Press and tap with both hands from the side to fully inhale air.

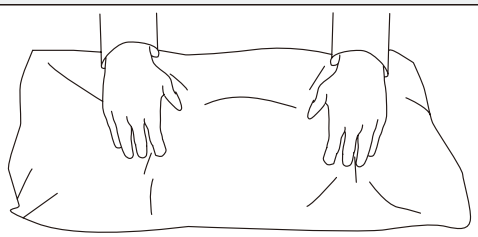

Press and tap with both hands from the front to fully inflate.

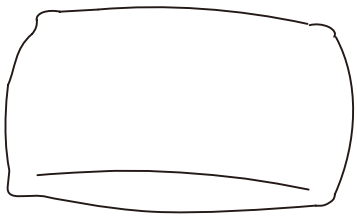

Carefully smooth out each section unti the surface is even.

After packing up, place them somewhere dry and ventilated.

After about 72-96 hours, it can be restored to the best-use condition.

EN

Assembly Instructions

Important : Please read these instructions fully before starting assembly.

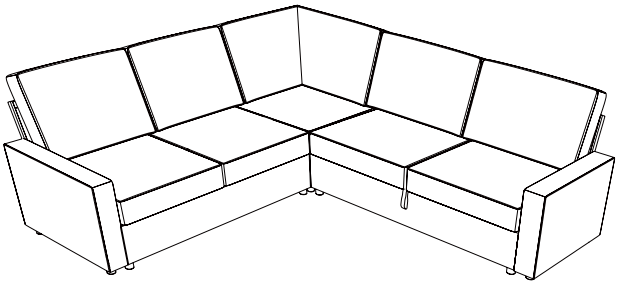

Note :

Shipped in multiple packages, each with its own tracking number. Shipments may NOT arrive at the same time.

Before starting assembly, determine where to place the sofa and your desired orientation.



2 people needed

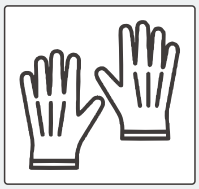

Work gloves

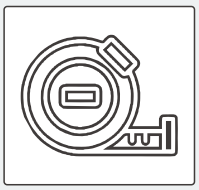

Tape measure

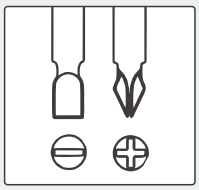

Other Tools Required
Phillips Screwdriver
(Not Included)

Simple Assembly Steps

1. Read the manual carefully.
2. Check all parts and hardware.
3. Prepare necessary tools.
4. Have at least two adults for assembly.

Please follow the instructions and use a sanitary napkin to protect the product during your assembly process.

Note:
1. The assembly should be done on a flat surface to maintain balance.
2. Do not tighten the screws before the assembly is complete.
To make the assembly process easier and better, two or more adults are needed.

Email : **service@grandtunnel.com**

Exploded View

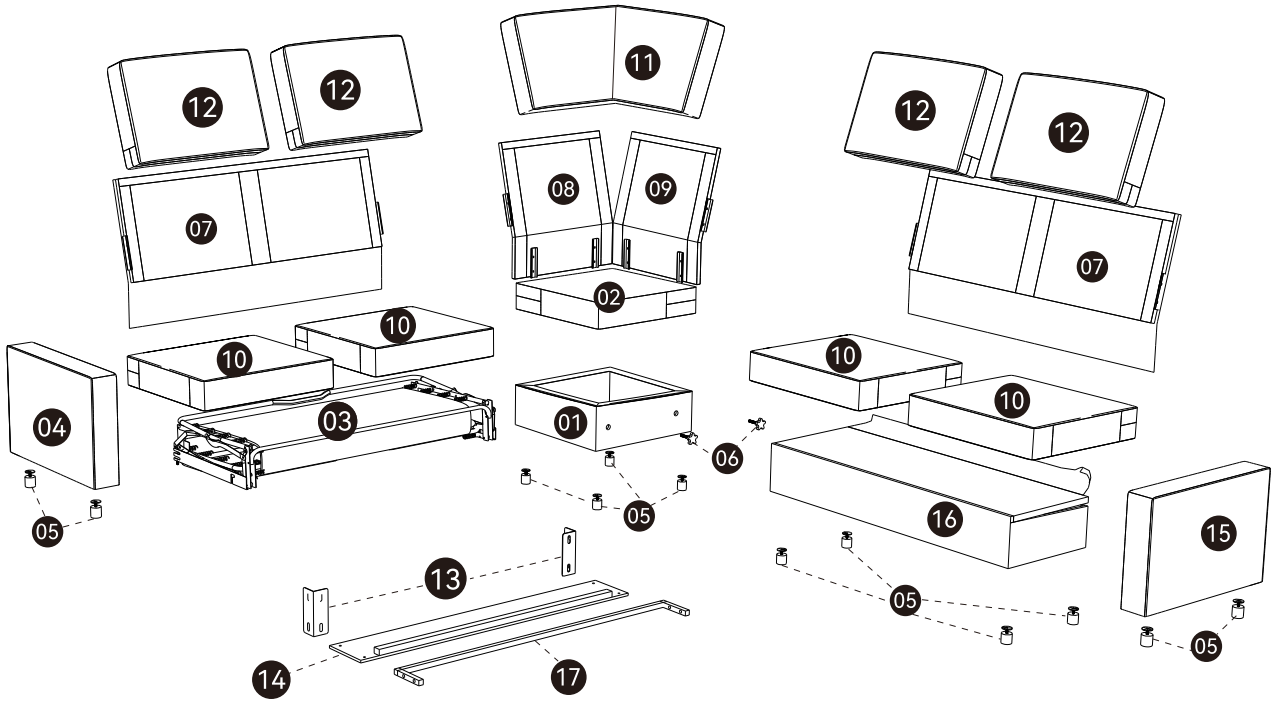

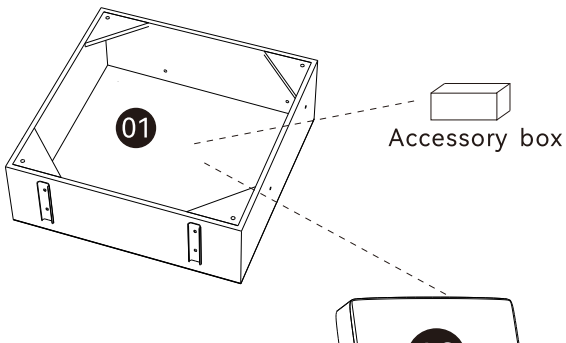

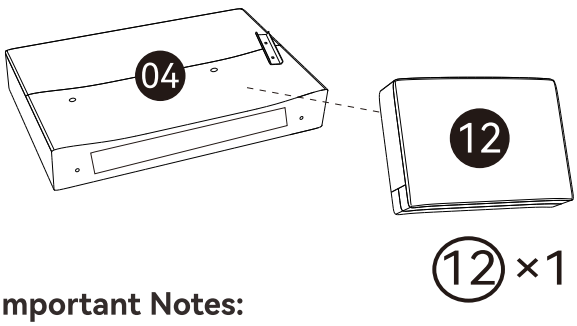

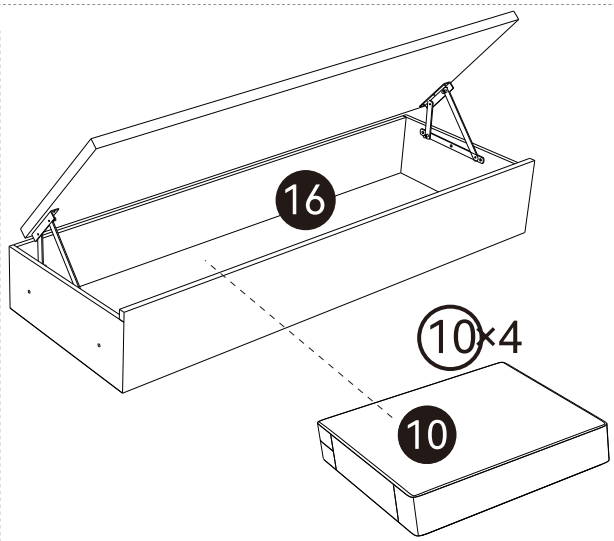



The protective fabric on the back Nylon Fastener of parts 14, 15, 16, and 17 must be removed before adhesion.

Important Notes:

This product requires two people for assembly.
The estimated assembly time is within one hour.
The product is heavy, so please handle it with care.

2 - Seater - Exploded View

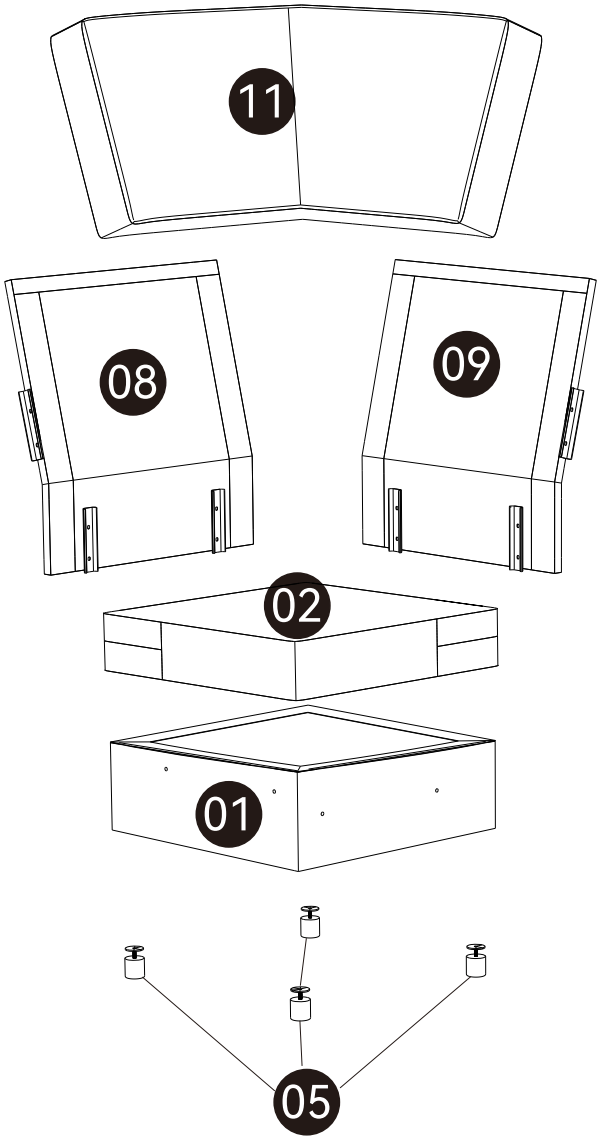

Box 1 : 02 05 11 01 08 09

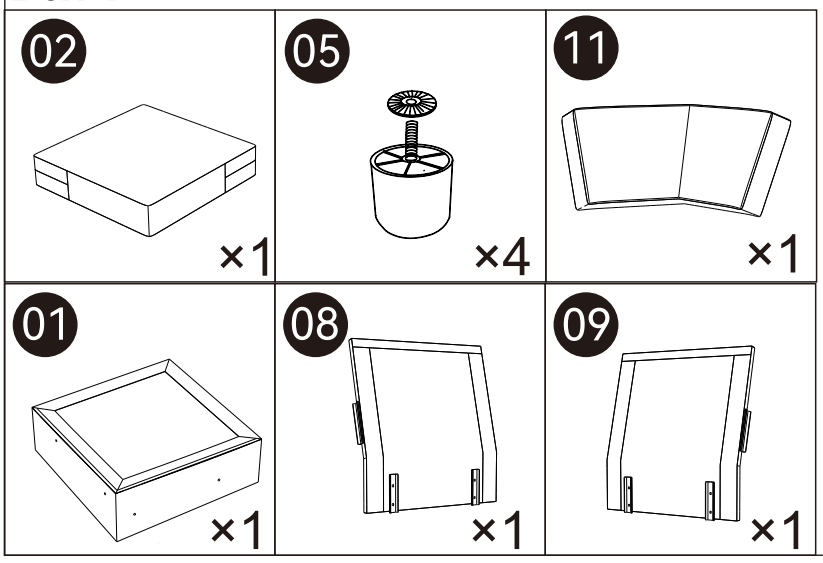

Email : **service@grandtunnel.com**

Step 1

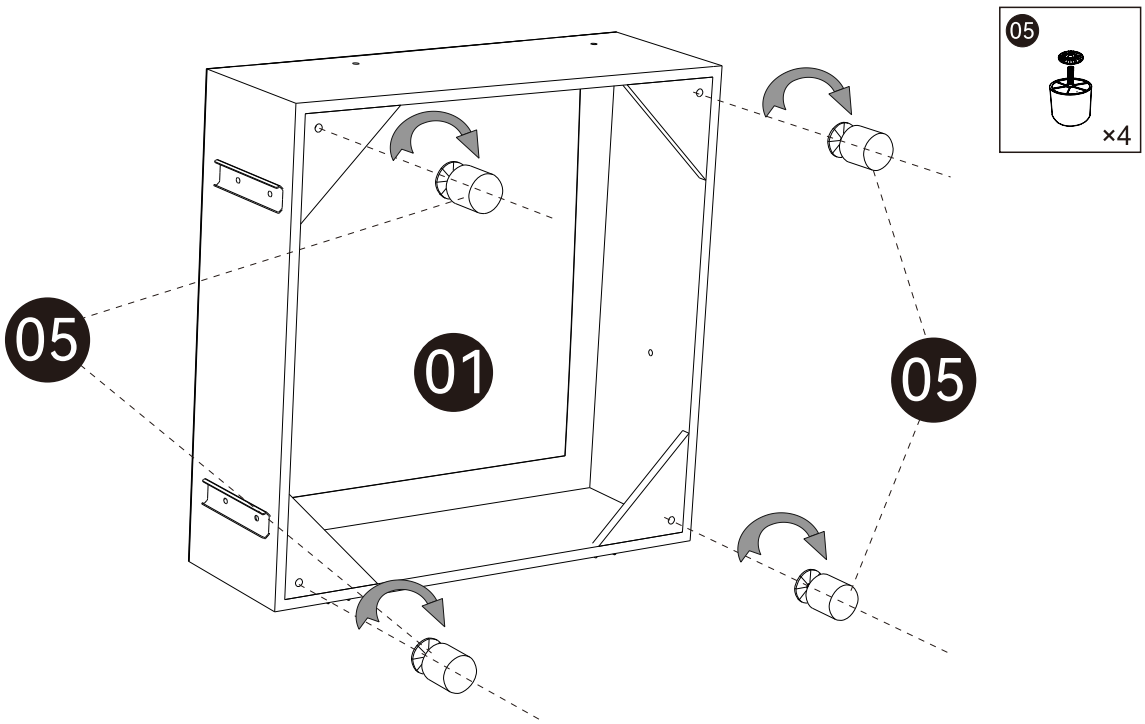

Turn Part 01 upside down. Install Part 05 ×4 into the four bottom corners and tighten securely.

Step 2

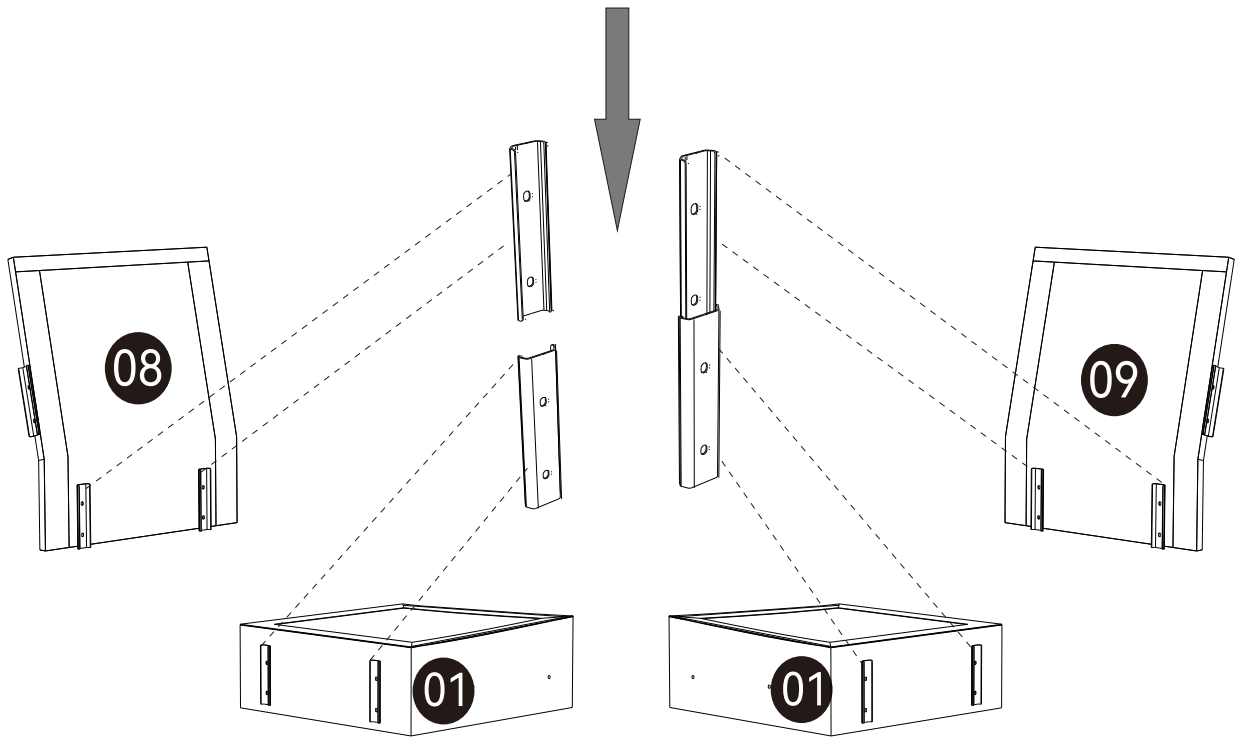

Align Part 08 (left backrest) and Part 09 (right backrest) with the connectors on both sides of Part 01, then slide them downward into place.

Step 3

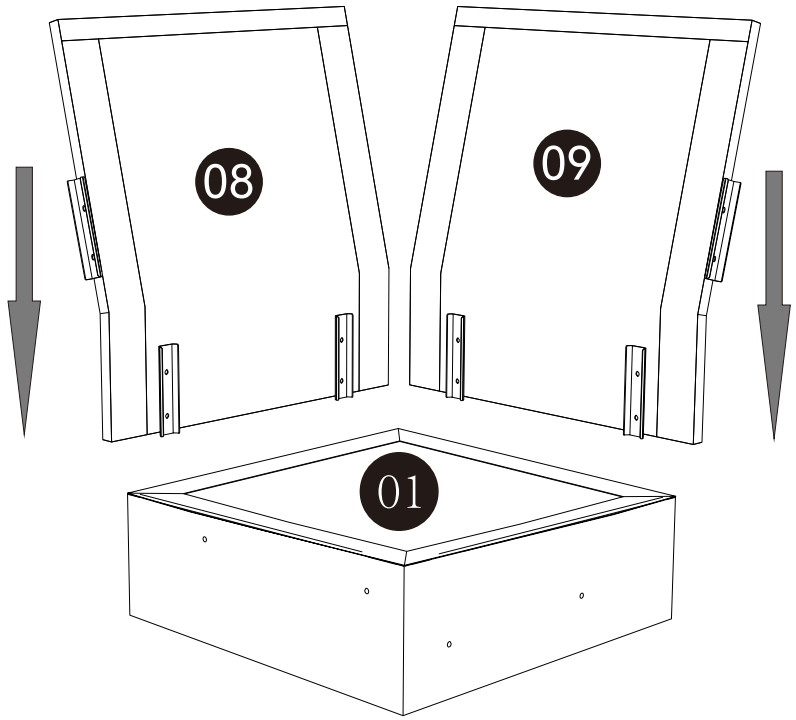

Press Parts 08 and 09 firmly downward until the connectors are fully engaged and locked in place.

Step 4

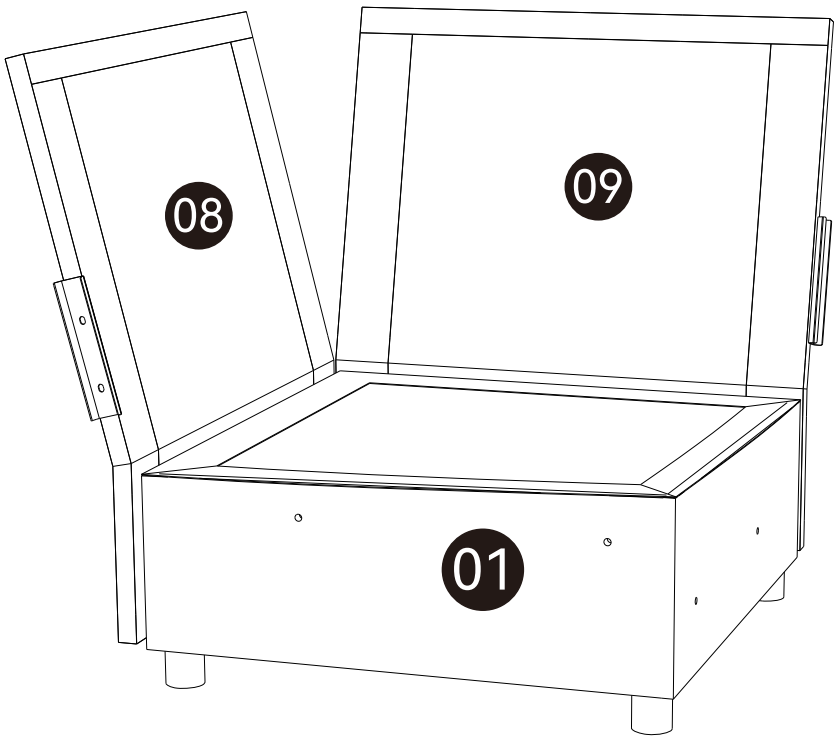

Check that all parts are securely connected to complete the corner module.

Email : **service@grandtunnel.com**

3 - Seater - Exploded View

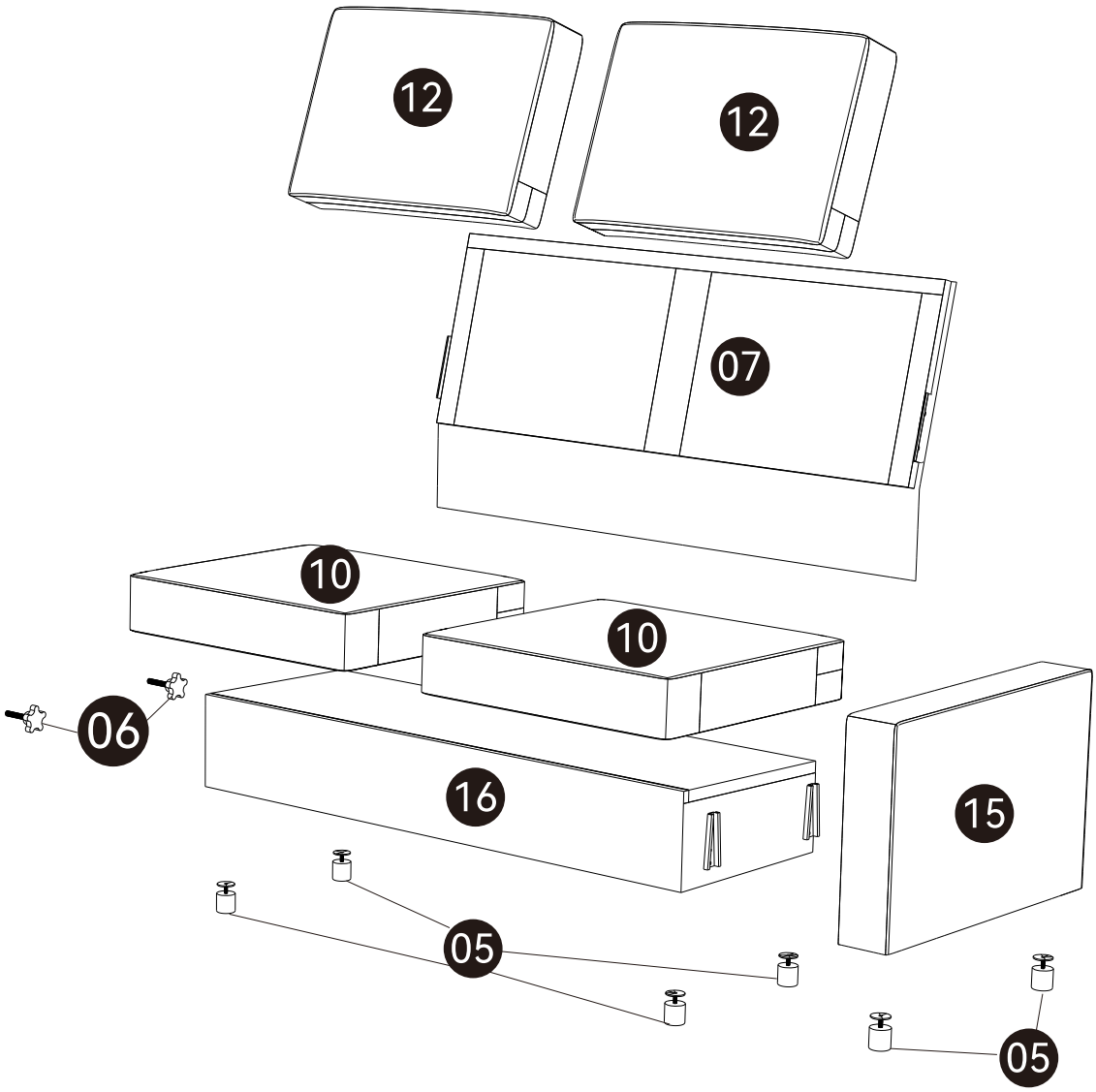

Box 1: 05 06 12 **Box 2**: 16 10 07 **Box 4**: 15

10 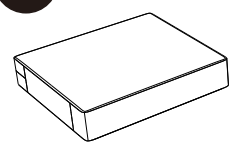 ×2	12 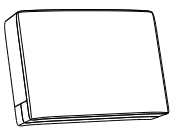 ×2	05  ×6	06 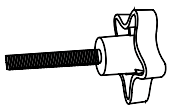 ×2
16 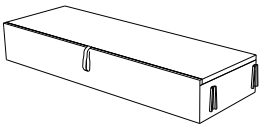 ×1	15 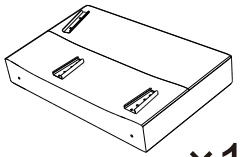 ×1	07 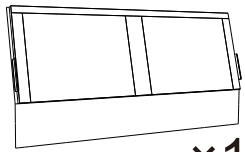 ×1	

Step 5

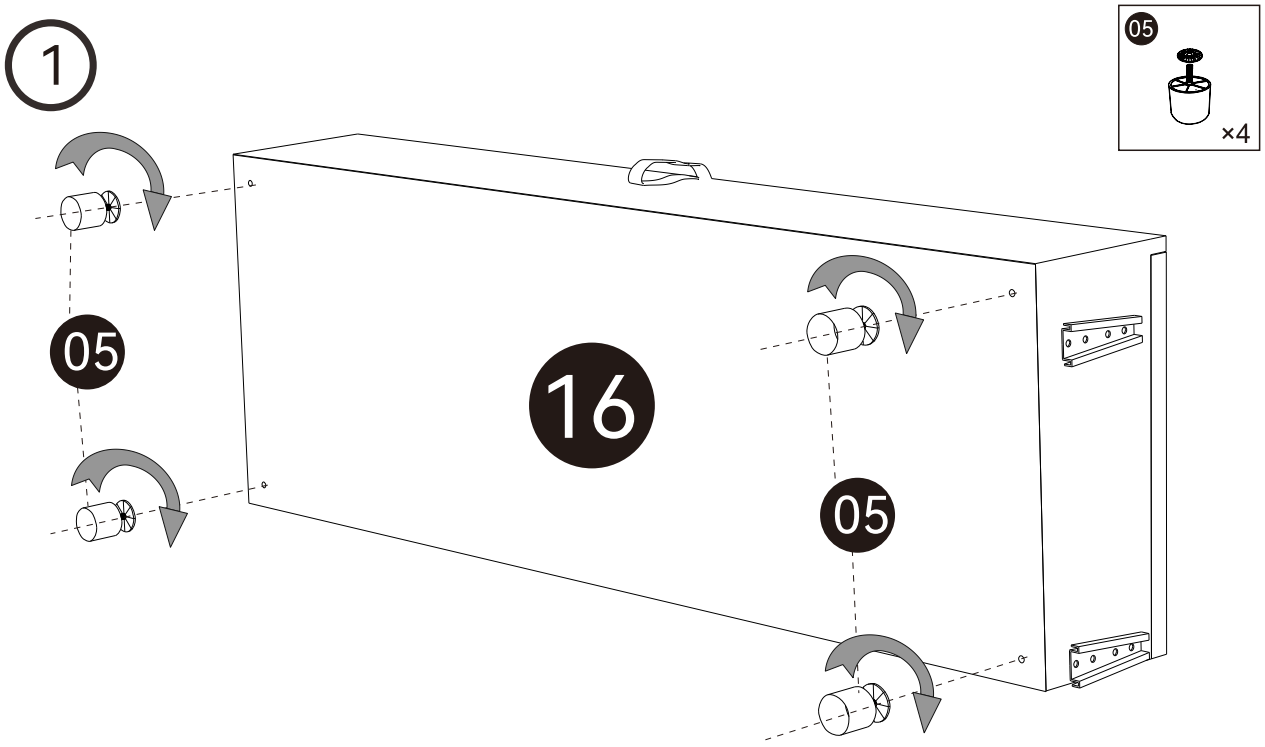

Install Part 05 ×4 onto the bottom of Part 16 and tighten securely.

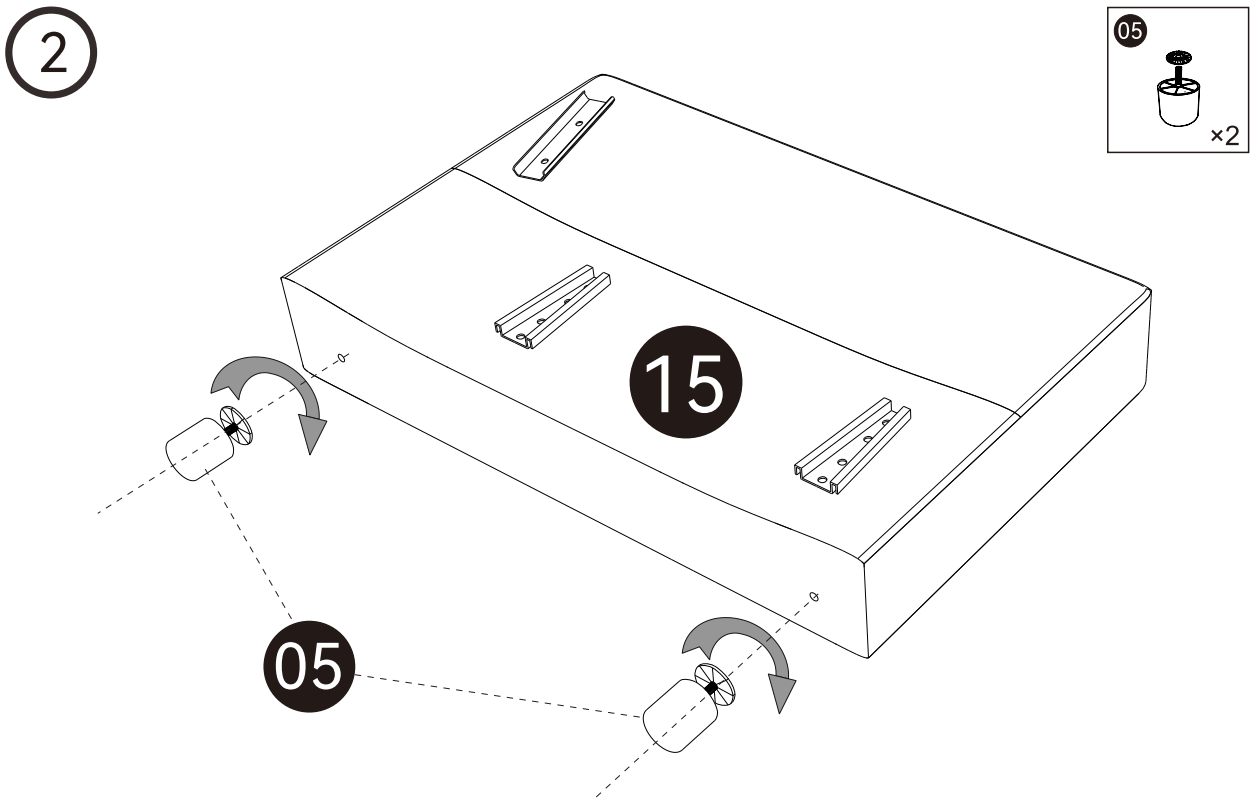

Install Part 05 ×2 onto the bottom of Part 15 and tighten securely.

Email : **service@grandtunnel.com**

Step 6

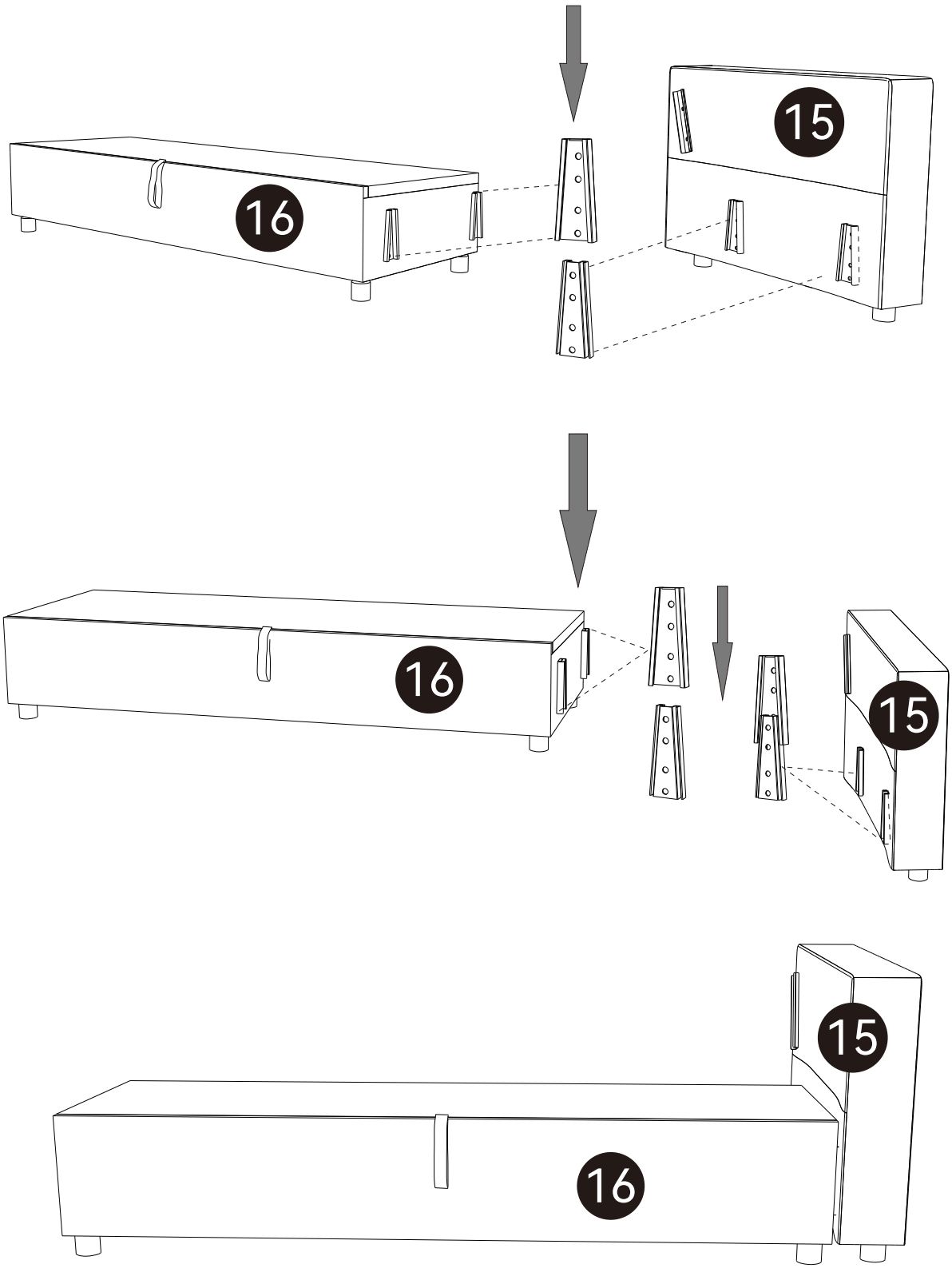

Align the side connectors on Part 15 with those on Part 16, then slide Part 15 downward until securely locked in place.

Step 7

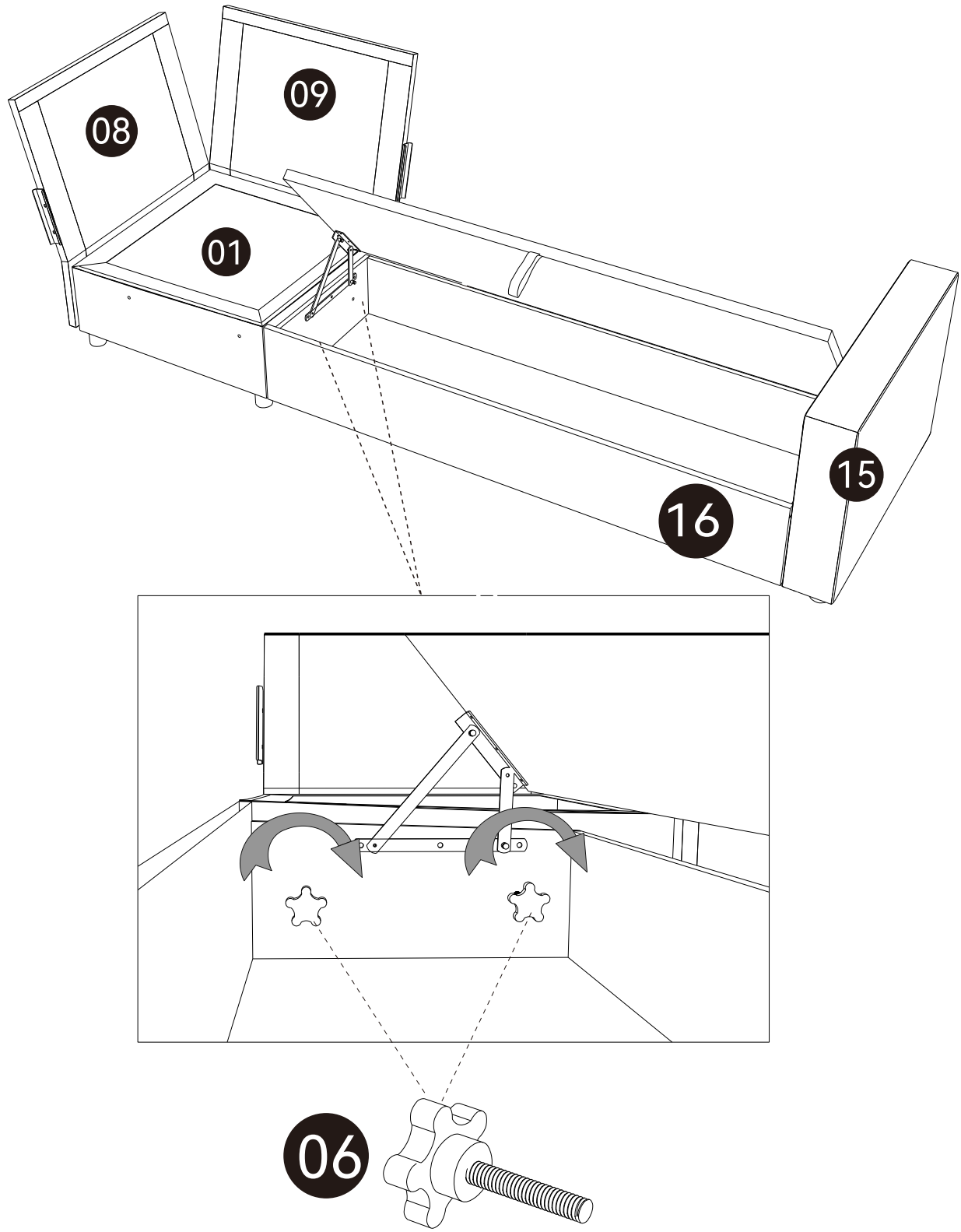

Align the corner module (Parts 01 + 08 + 09) with the three-seater module (Parts 16 + 15). Secure the two modules together using Part 06 ×2 and tighten securely.

Email : **service@grandtunnel.com**

Step 8

1

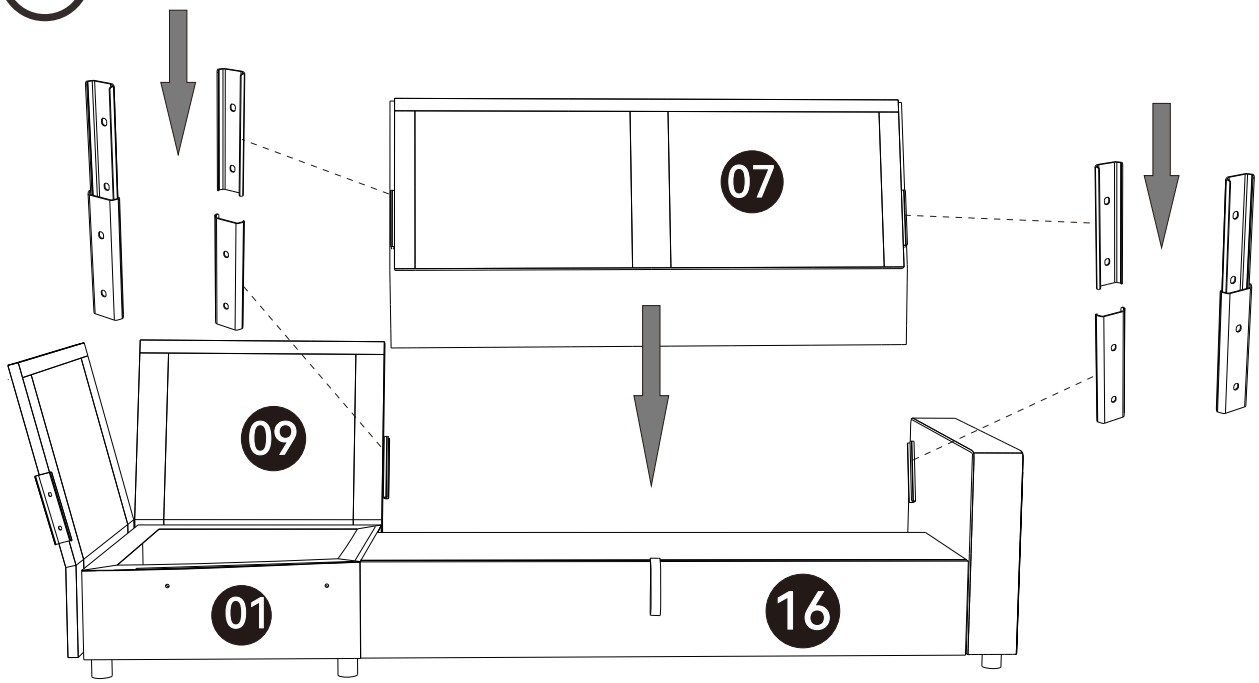

Align Part 07 with the backrest connectors on the three-seater module, then slide it downward until fully engaged.

2

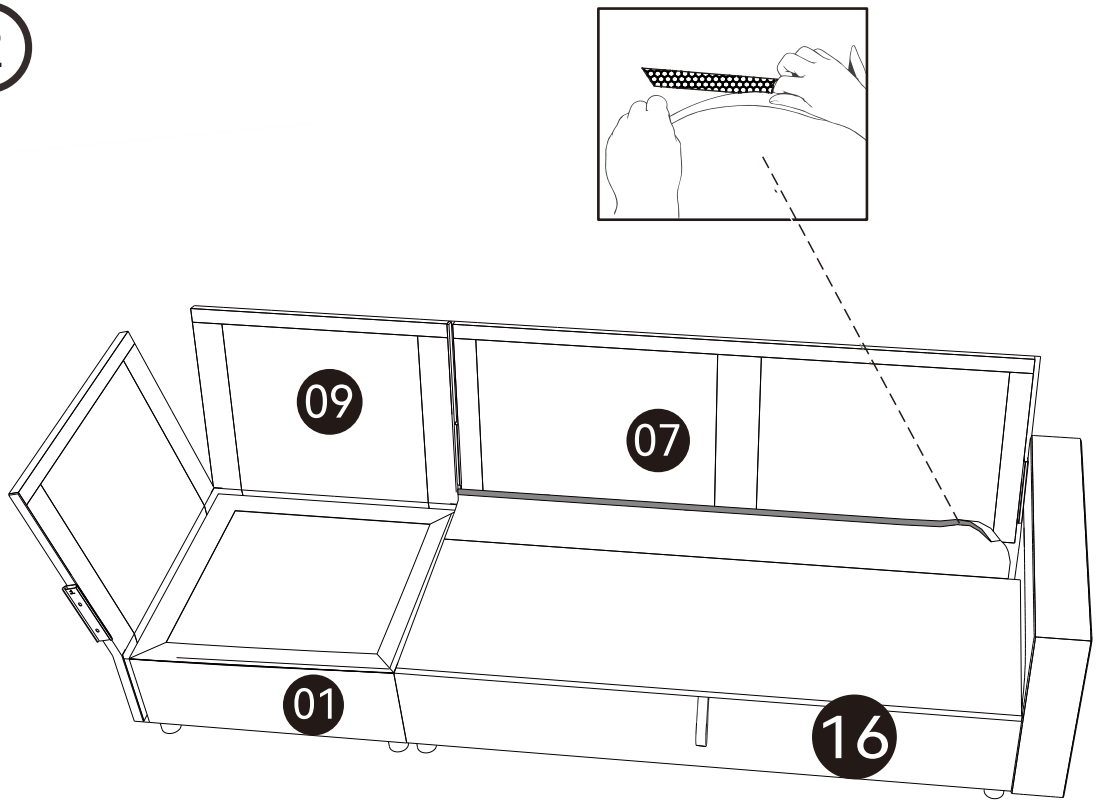

Remove the protective strip from the fastening tape on Part 16, then press it firmly against Part 07 to secure it in place.

EN

Chaise - Exploded View

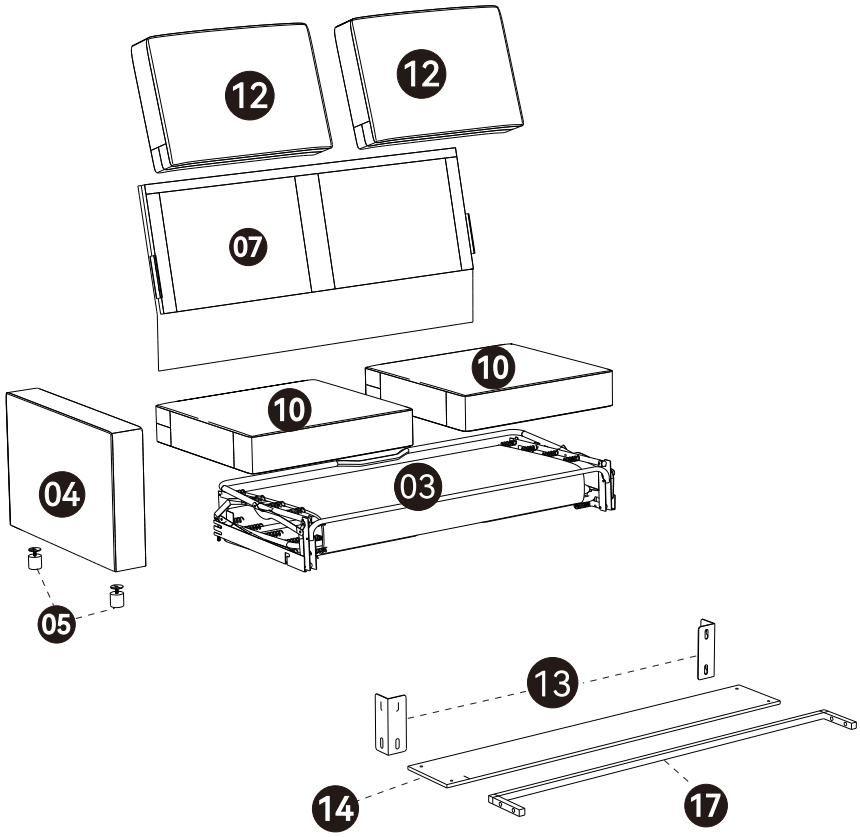

Box 1: 05 12 13 B C E **Box 2**: 10 07

Box 3: 03 14 17 **Box 4**: 04 12

03 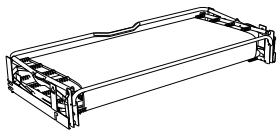 ×1	10 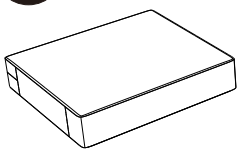 ×2	12 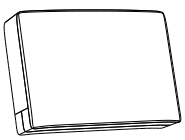 ×2	14 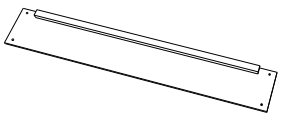 ×1
05  ×2	04 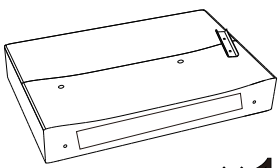 ×1	07 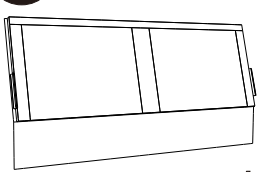 ×1	17 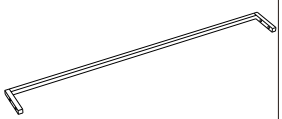 ×1
13 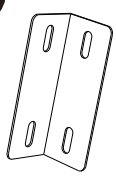 ×2	B 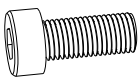 M*20 ×14	C  M*50 ×4	E 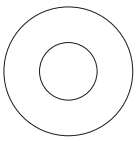 ×4

Email : **service@grandtunnel.com**

Step 9

1

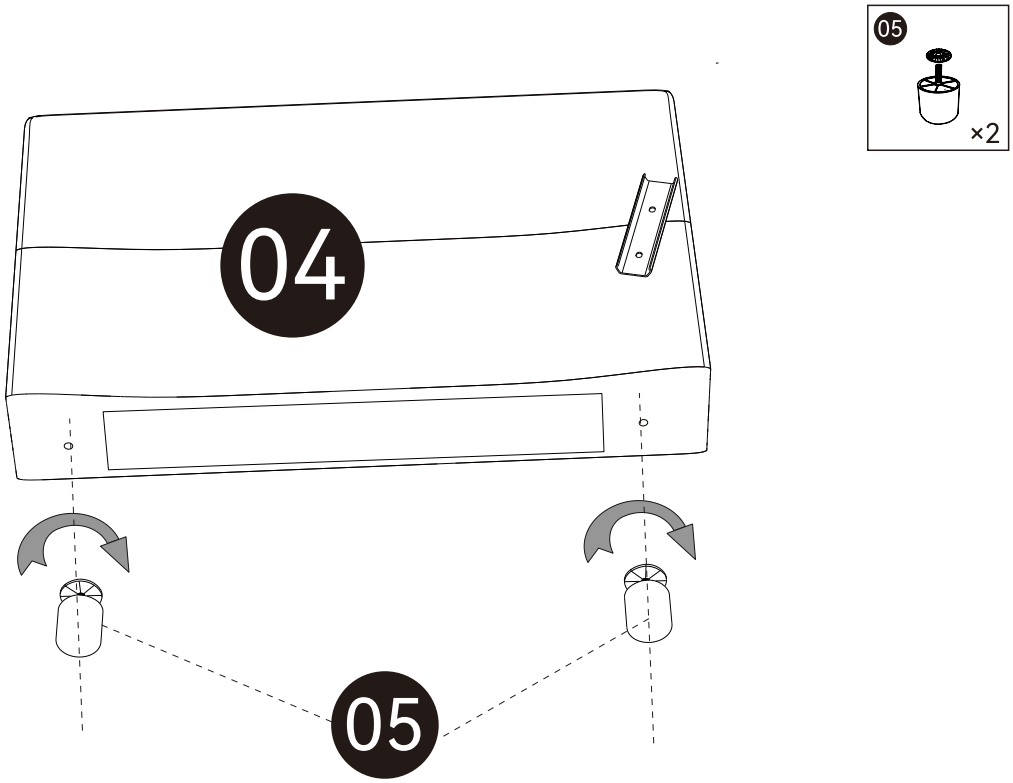

Install Part 05 ×2 onto the bottom of Part 04 and tighten securely.

2

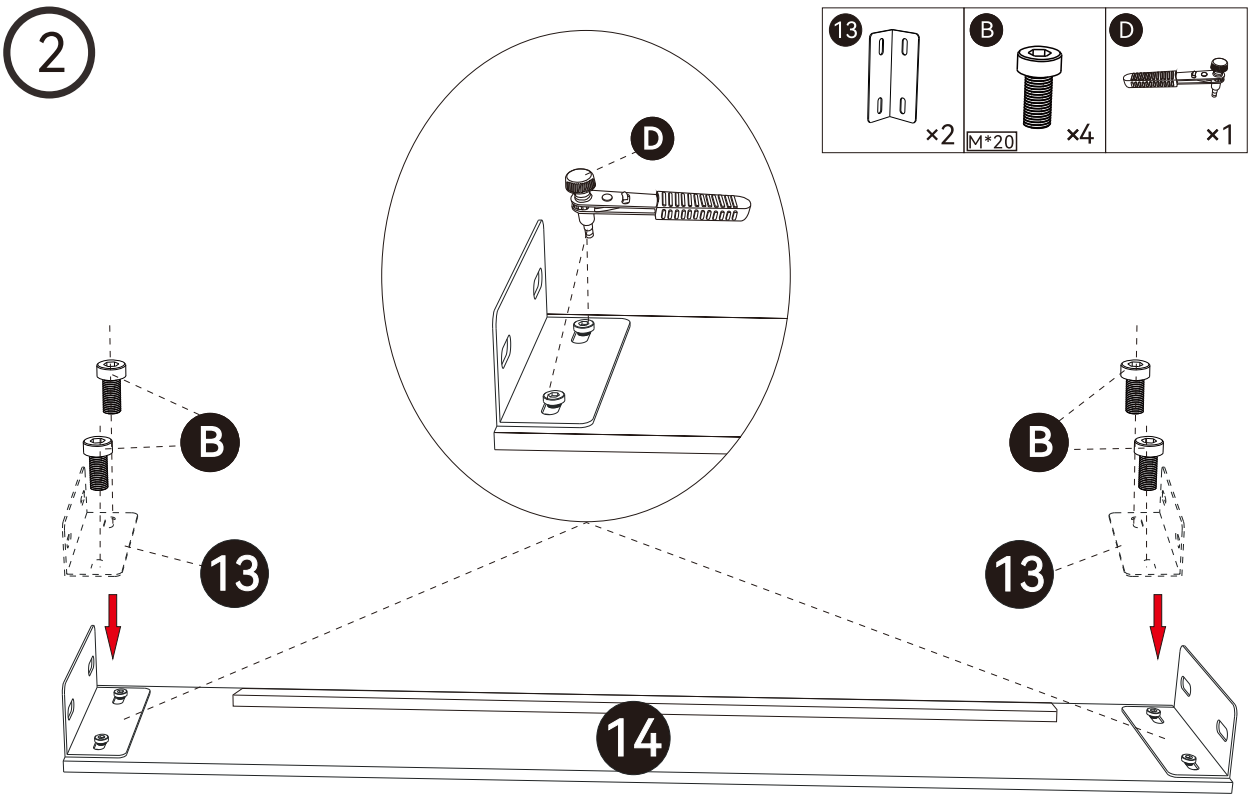

Fit one Part 13 onto each end of Part 14. Pre-tighten Bolt B (M6 × 20) ×4 to approximately 80% using Wrench D.

Step 10

1 Position Part 14 next to the sofa body, adjacent to Part 01. Secure one end of Part 14 to Part 01 with Bolt B ×2. Adjust the alignment, then fully tighten the bolts.

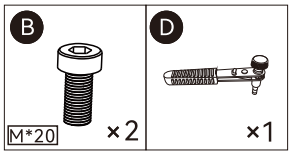

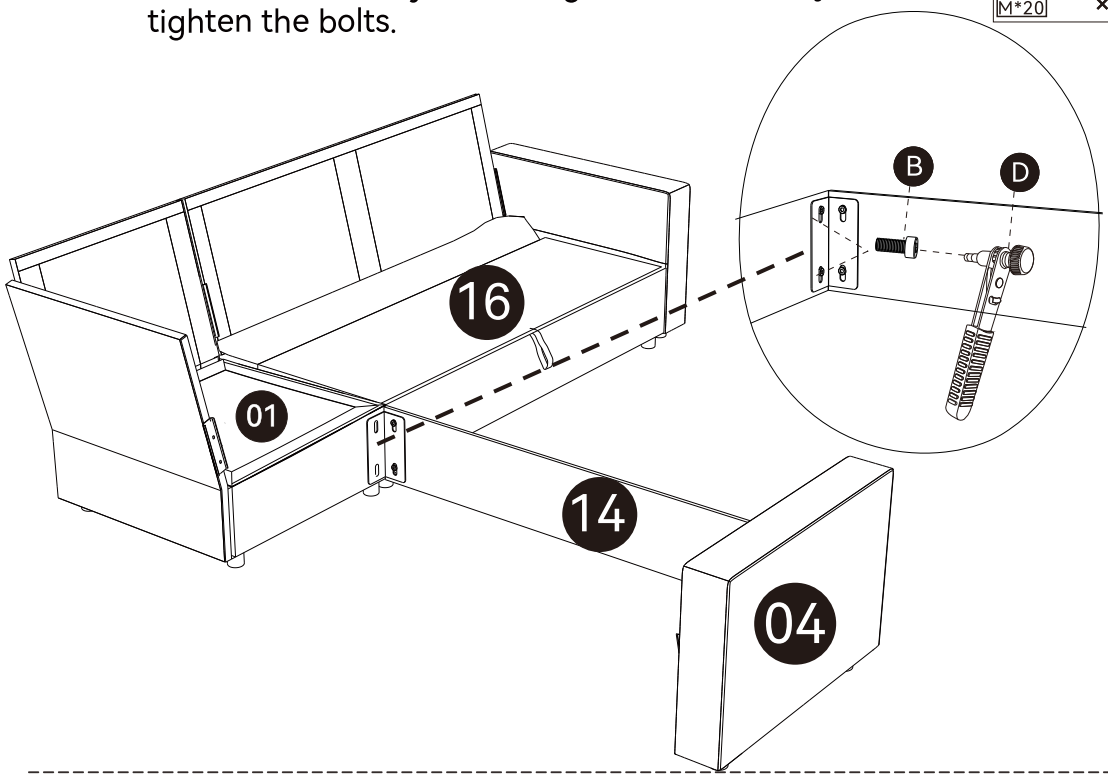

2 Secure the other end of Part 14 to Part 04 with Bolt B ×2. Adjust the alignment, then fully tighten the bolts.

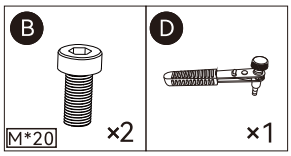

Email : **service@grandtunnel.com**

Step 11

1

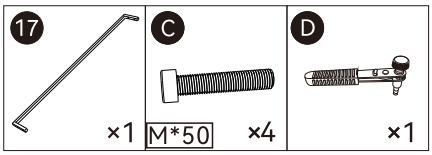

Install Part 17 and secure it with Bolt C (M6 × 50) ×4.

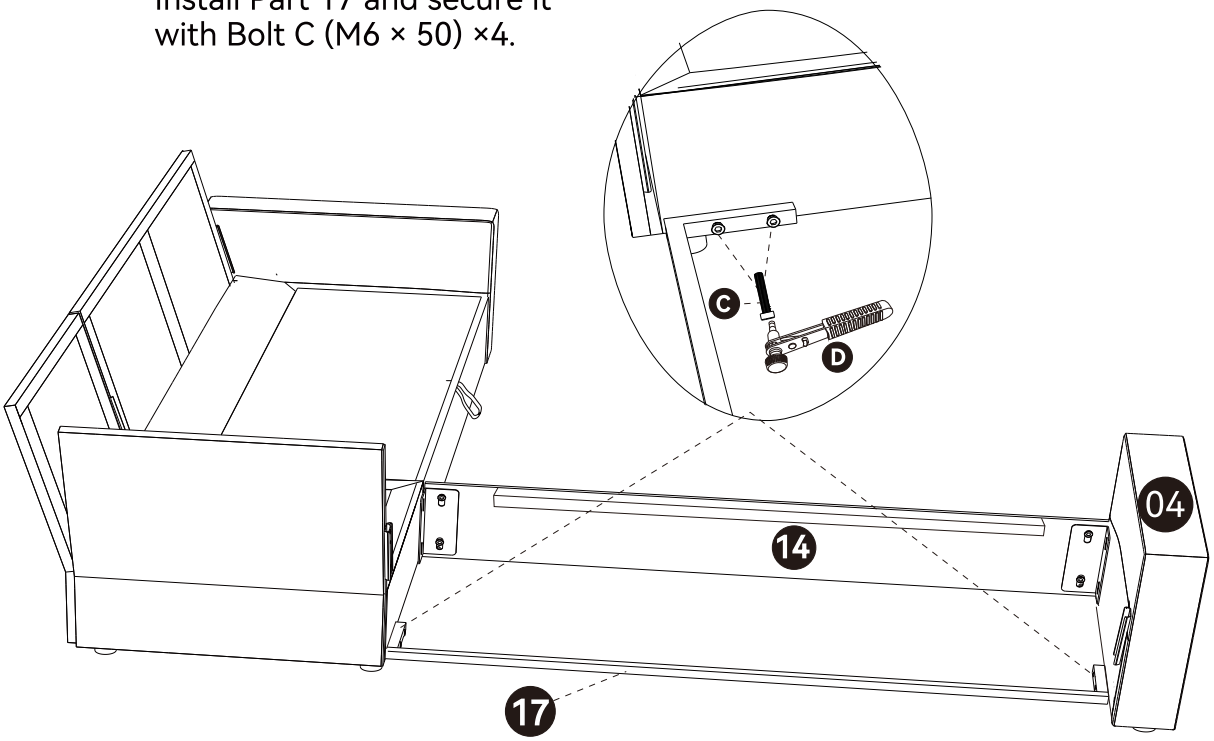

2

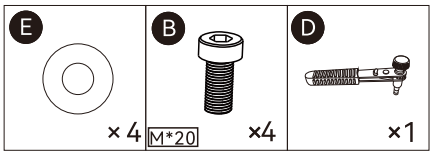

Install Bolt B ×4 with Washer E ×4 at the four bottom corners. Pre-tighten the bolts to approximately 30%. Once all parts are properly aligned, fully tighten the bolts.

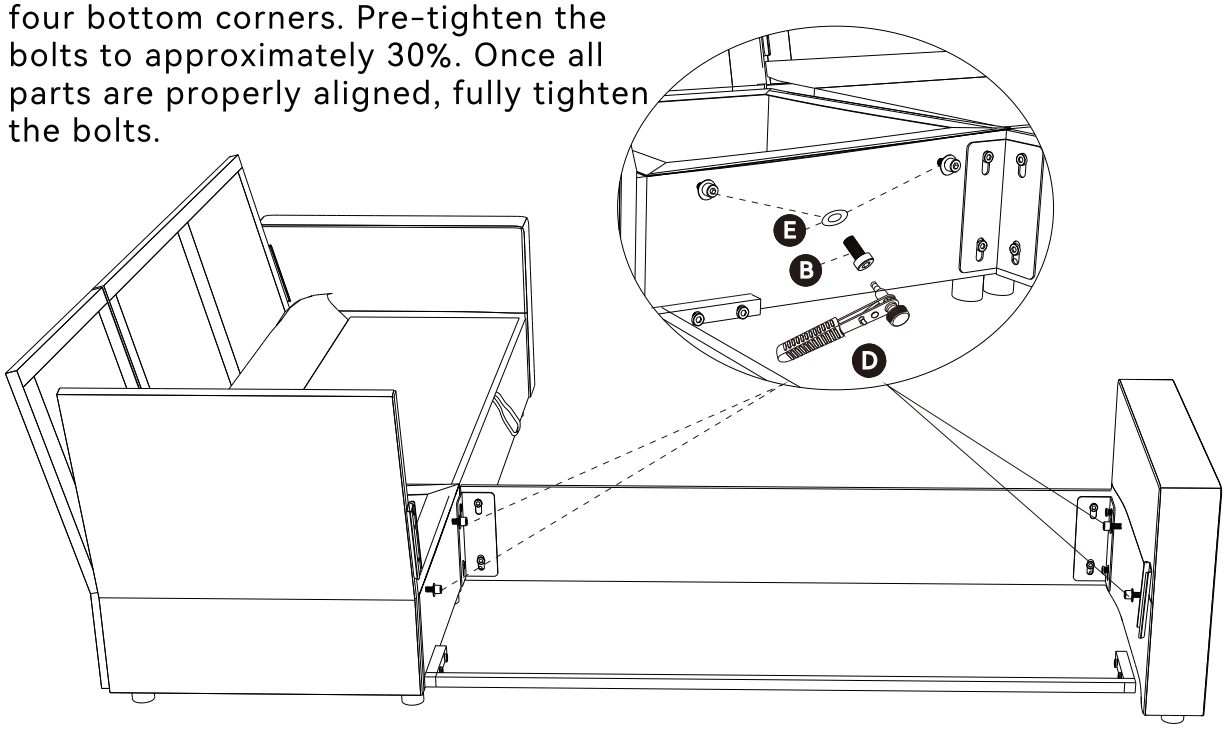

Step 12

1

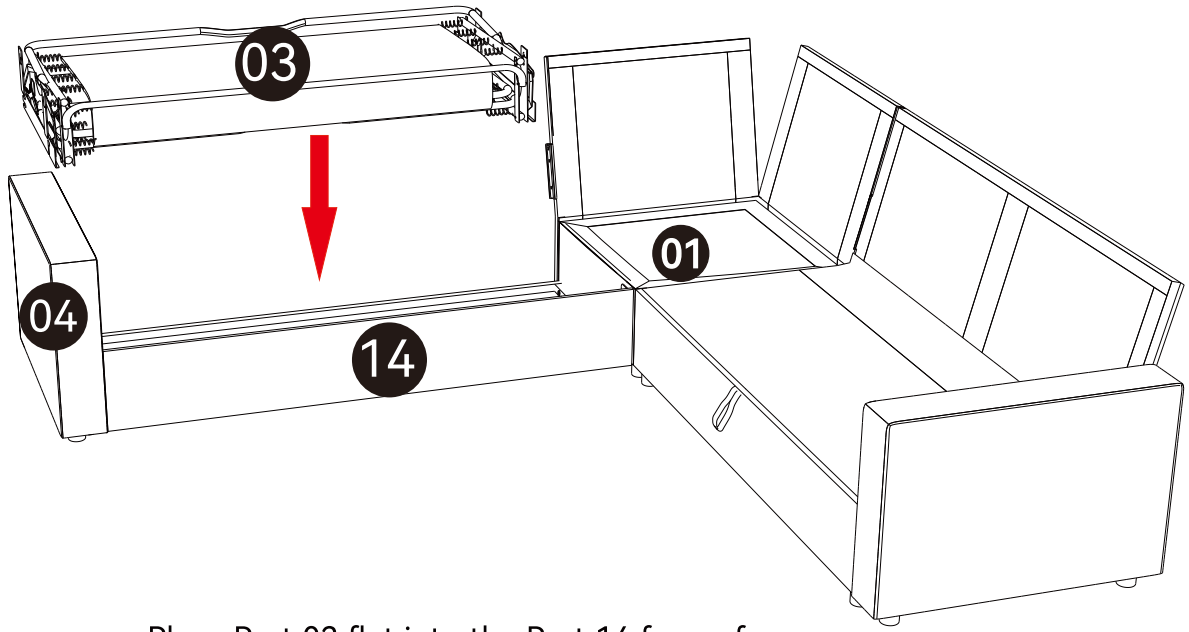

Place Part 03 flat into the Part 14 frame from above, between Part 04 and Part 01.

2

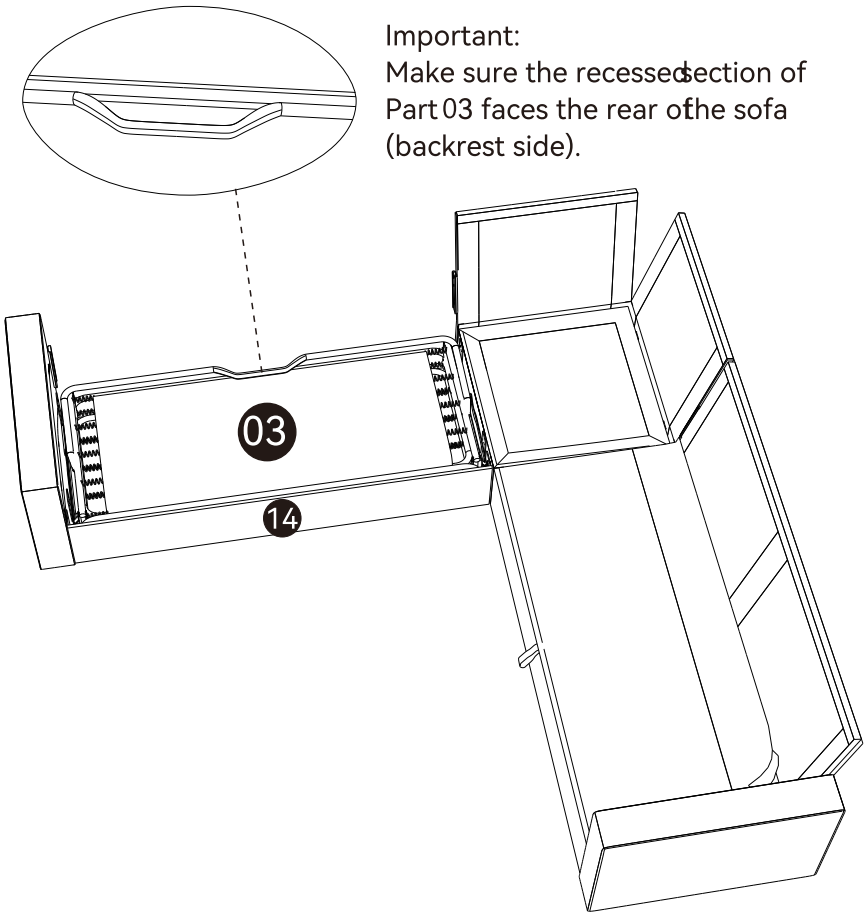

Important:
Make sure the recessed section of Part 03 faces the rear of the sofa (backrest side).

Email : **service@grandtunnel.com**

Step 13

Hook the mounting holes on both sides of Part 03 onto the pre-installed Bolts B. Adjust the position, then fully tighten the bolts.

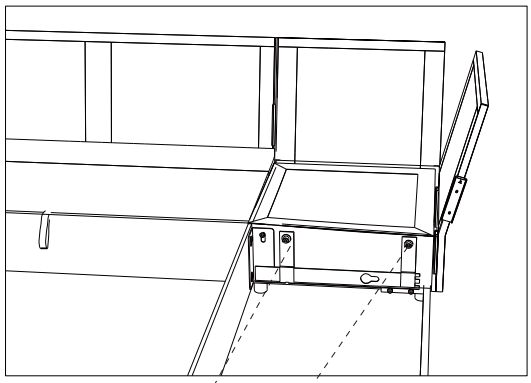

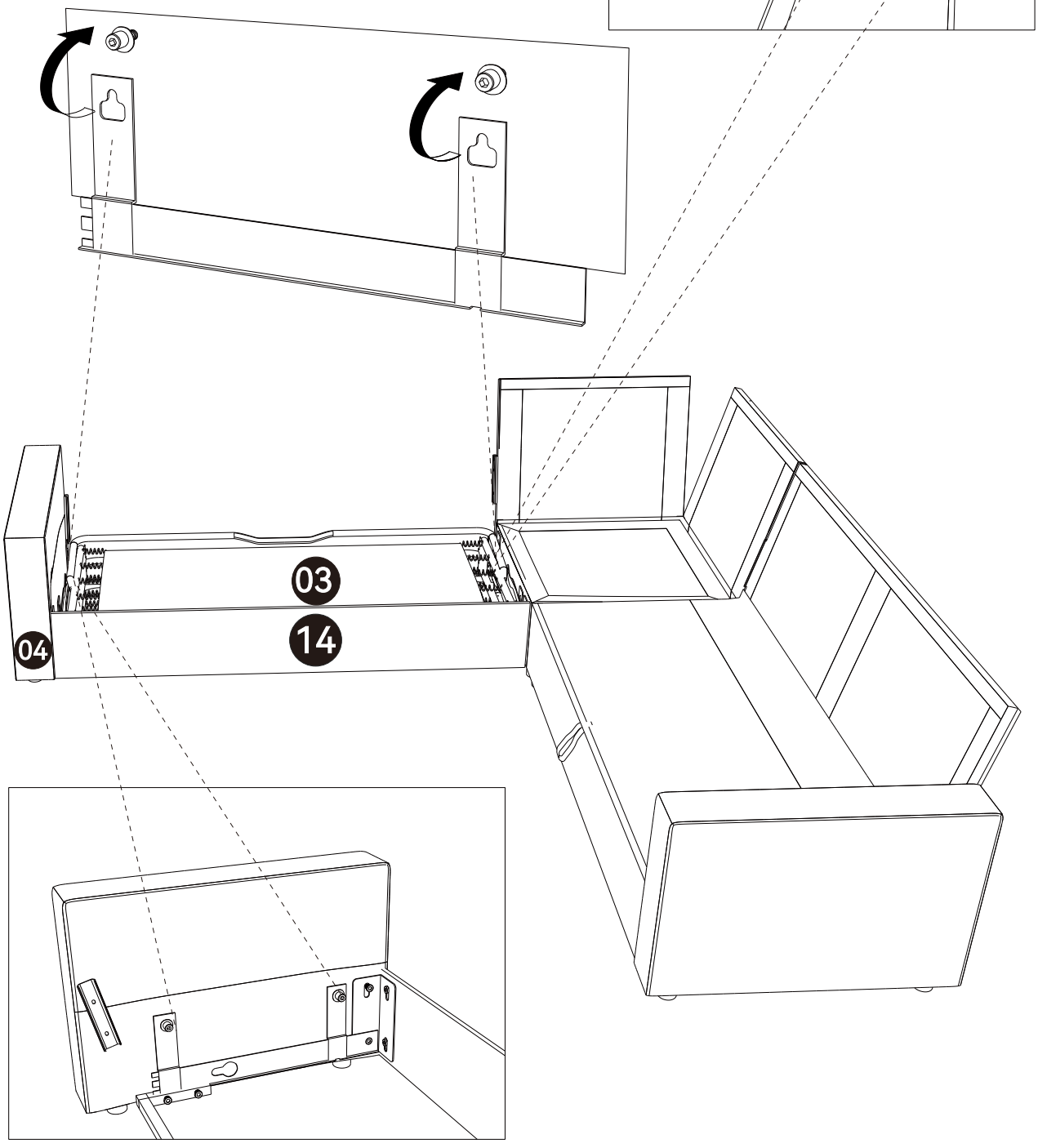

EN

Step 14

1

Pull Part 03 fully outward.

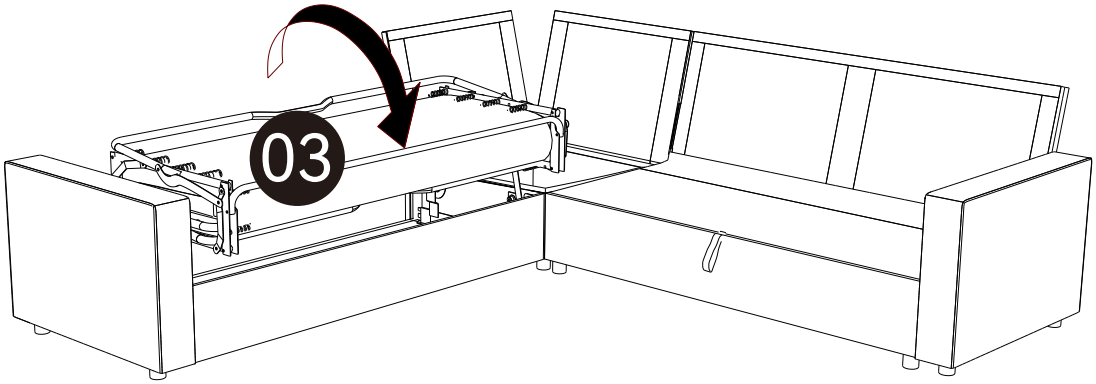

2

Secure both slide rail ends with
Bolt B ×2 and fully tighten using Wrench D.

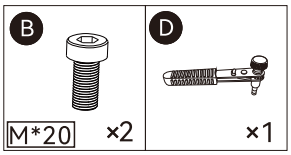

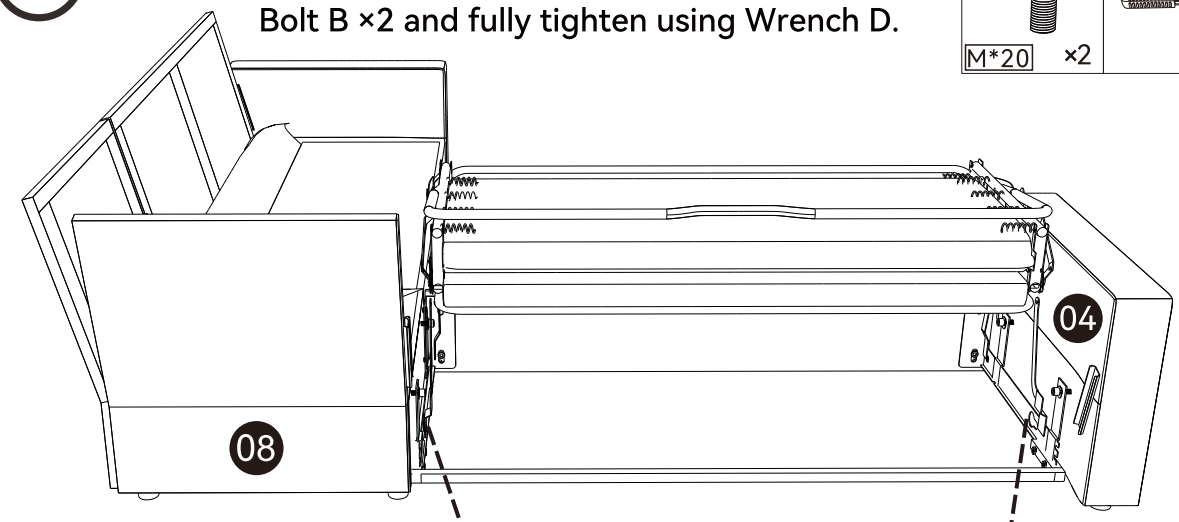

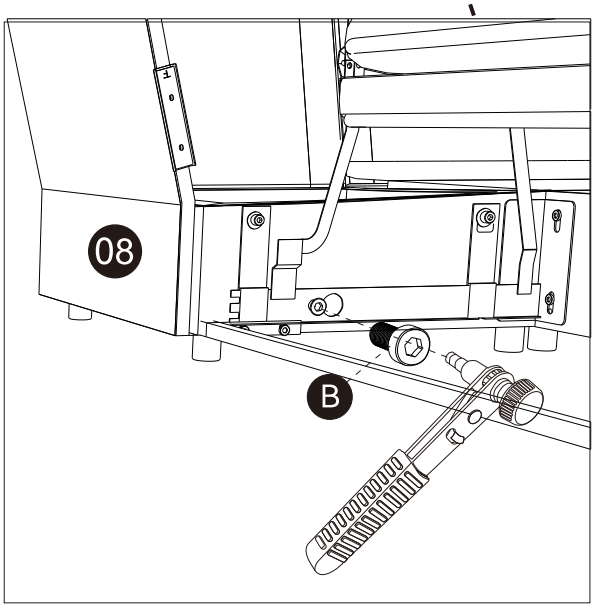

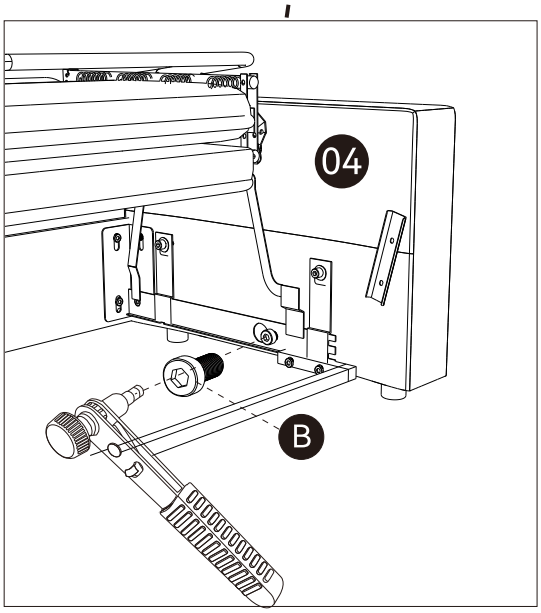

Email : **service@grandtunnel.com**

Step 15

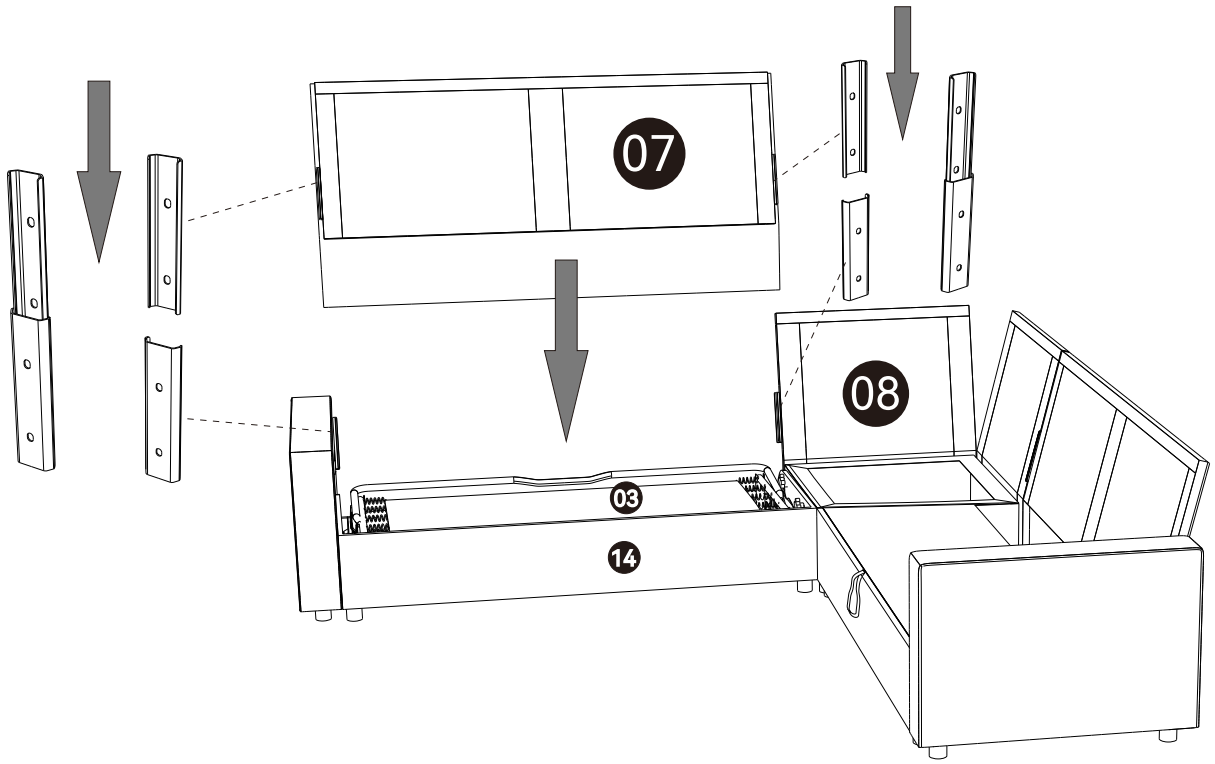

Align Part 07 with the corresponding backrest connectors, then slide it downward until fully engaged and locked in place.

Step 16

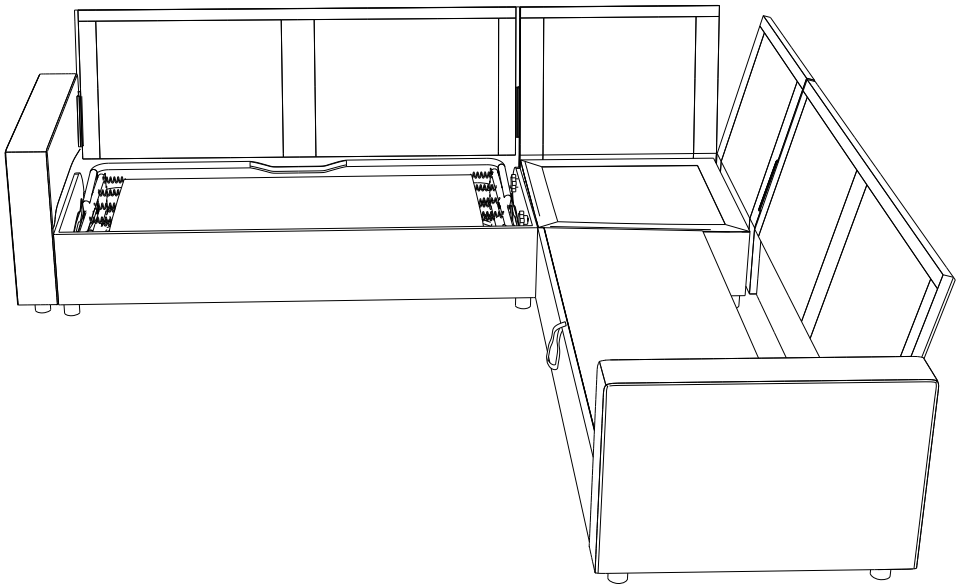

Check that all parts are securely connected to complete the module assembly.

Step 17

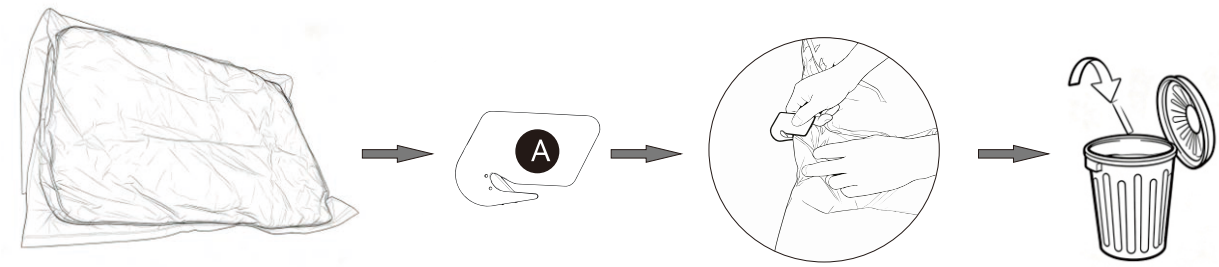

Remove the compressed seat cushions from the packaging.
Carefully cut open the compression bags using Safety Cutter A.
Allow the seat cushions to expand naturally.They may take up to 72 hours to reach their optimal shape.

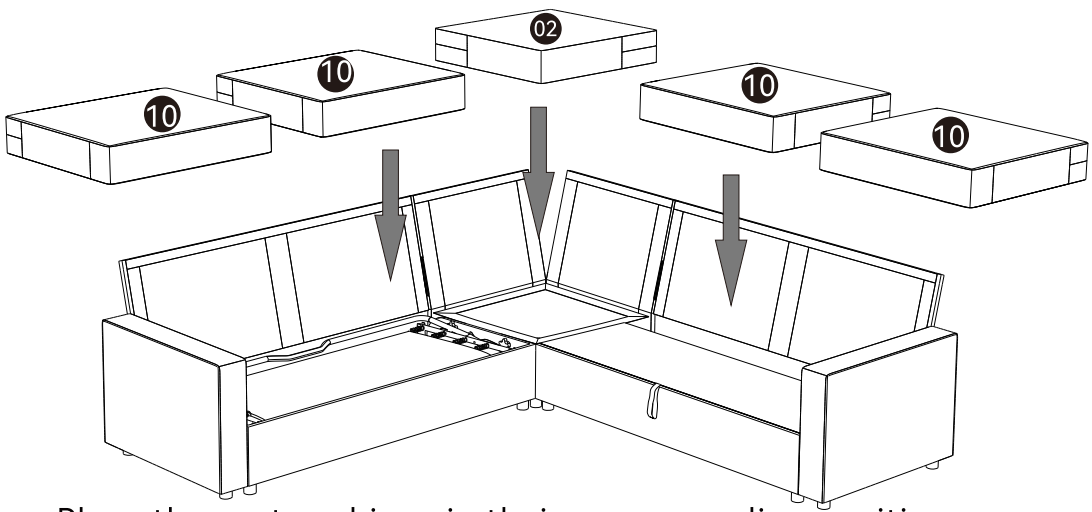

Place the seat cushions in their corresponding positions.

Email : **service@grandtunnel.com**

Step 18

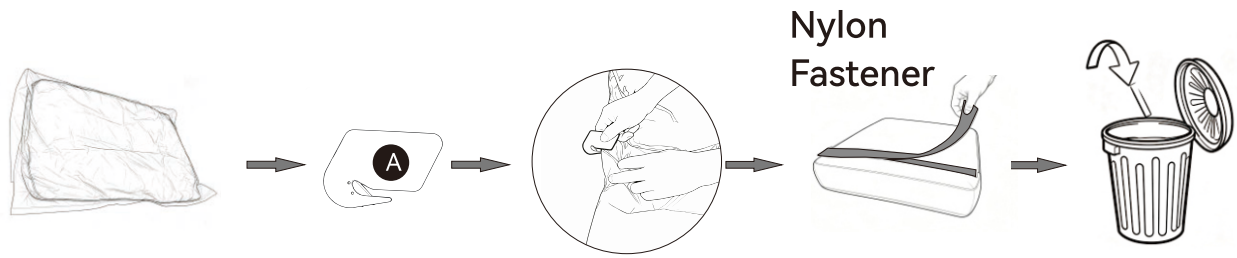

Remove the compressed back cushions from the packaging.
Carefully cut open the compression bags using Safety Cutter A.
Remove the protective strips from the fastening tape on the back of the backrest frames.
Allow the back cushions to expand naturally. They may take up to 72 hours to reach their optimal shape.

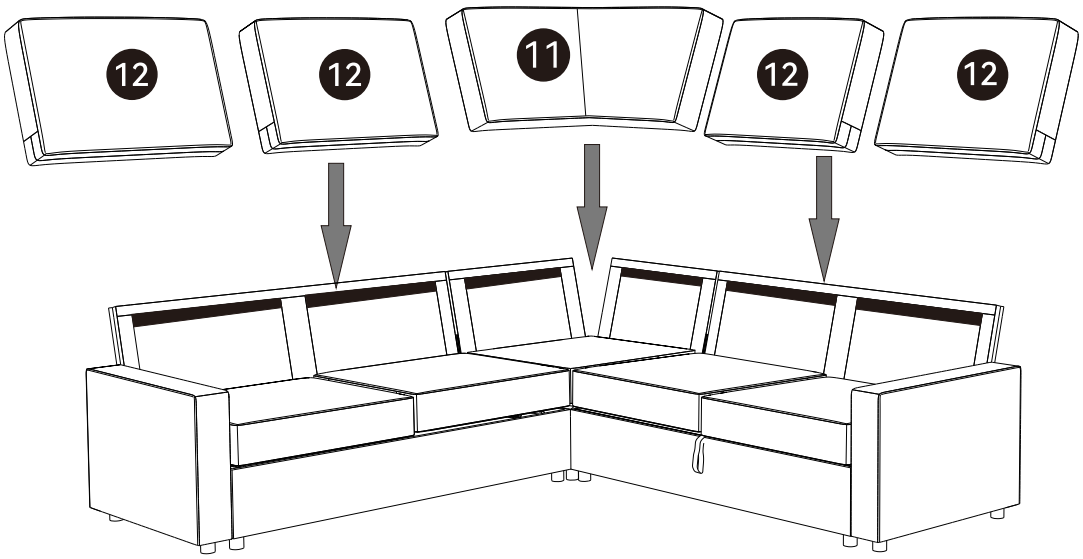

Place the back cushions in their corresponding positions.

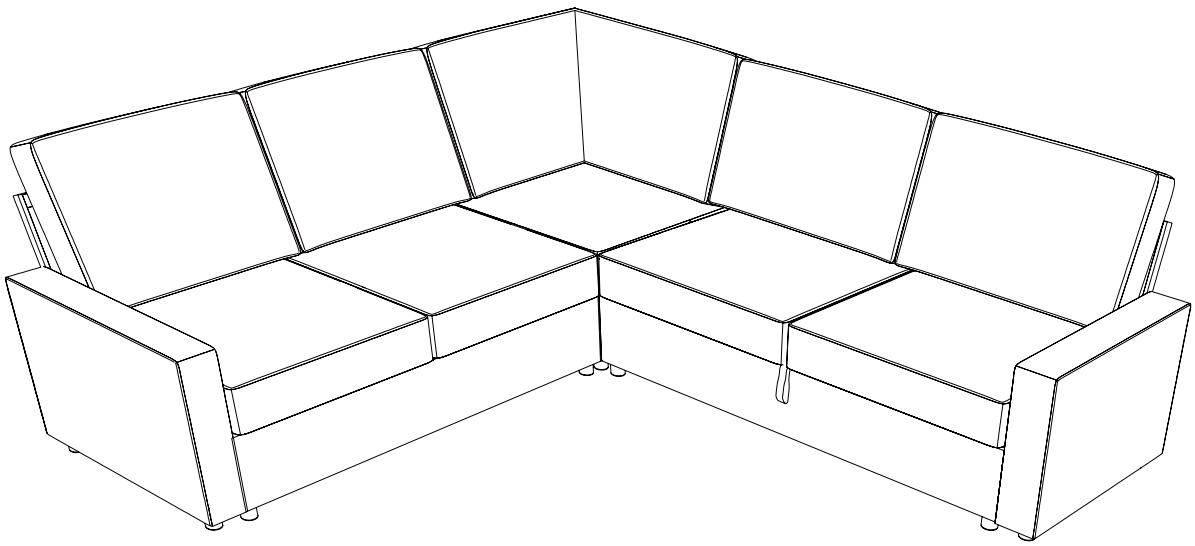

Step 19

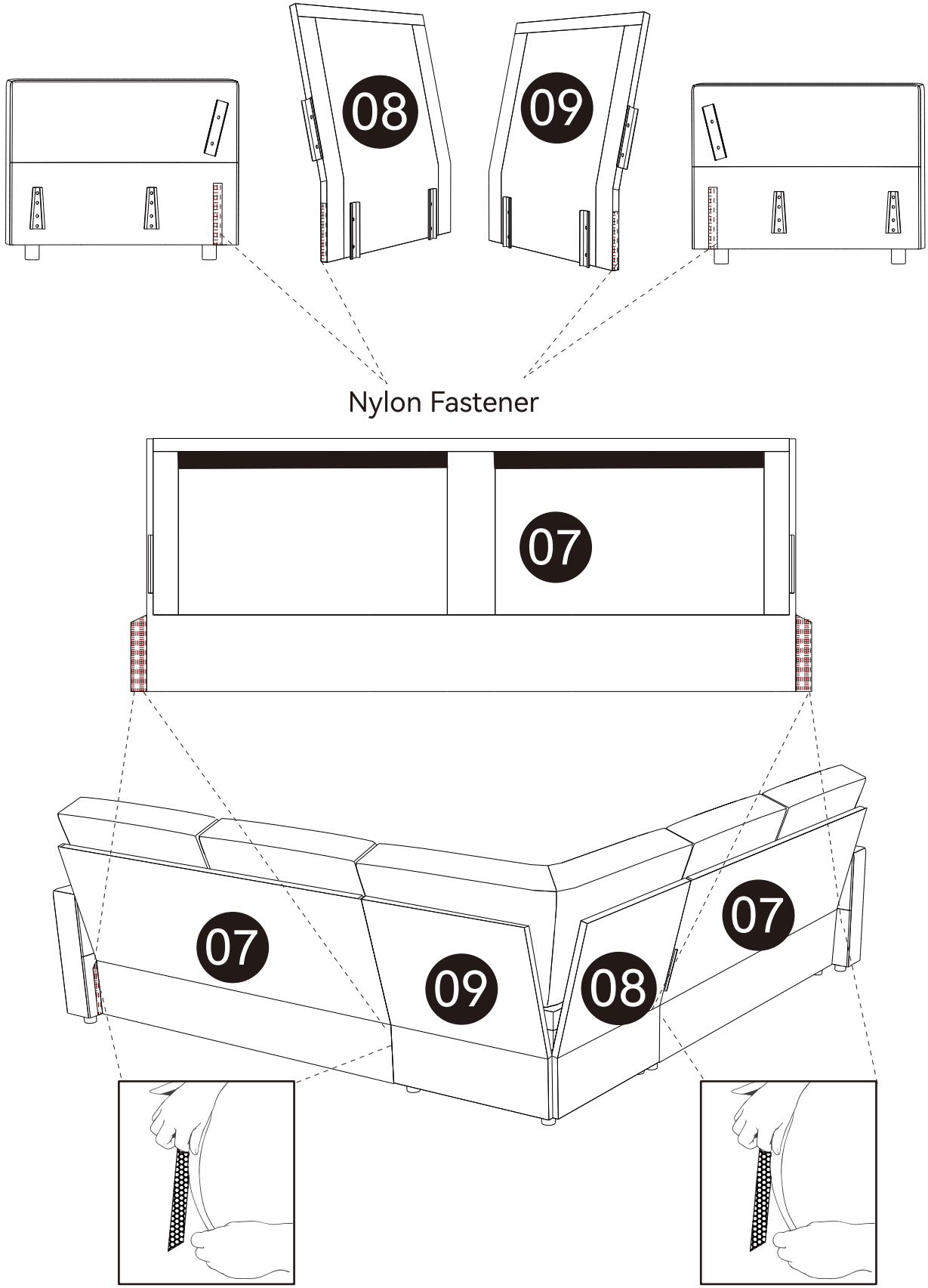

Firmly attach the Nylon Fasteners on the sides of Parts 08, 09, and 07 to the corresponding areas on the back cushions.

Email : **service@grandtunnel.com**

Step 20

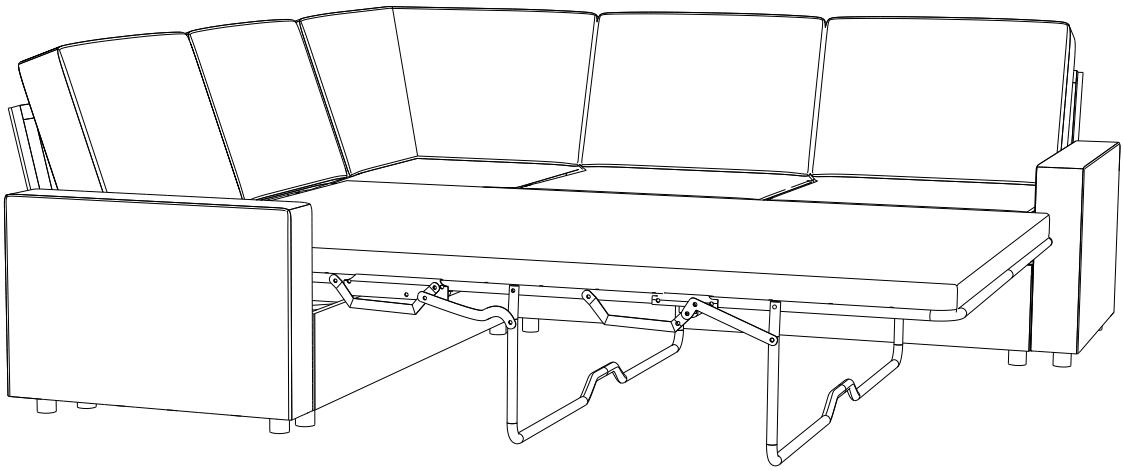

How to Use the Bed Frame:

Follow the illustrated steps to unfold the bed.
Place the seat and back cushions in the space behind the sofa.
When not in use, follow the steps in reverse order to fold the bed.

Step 21

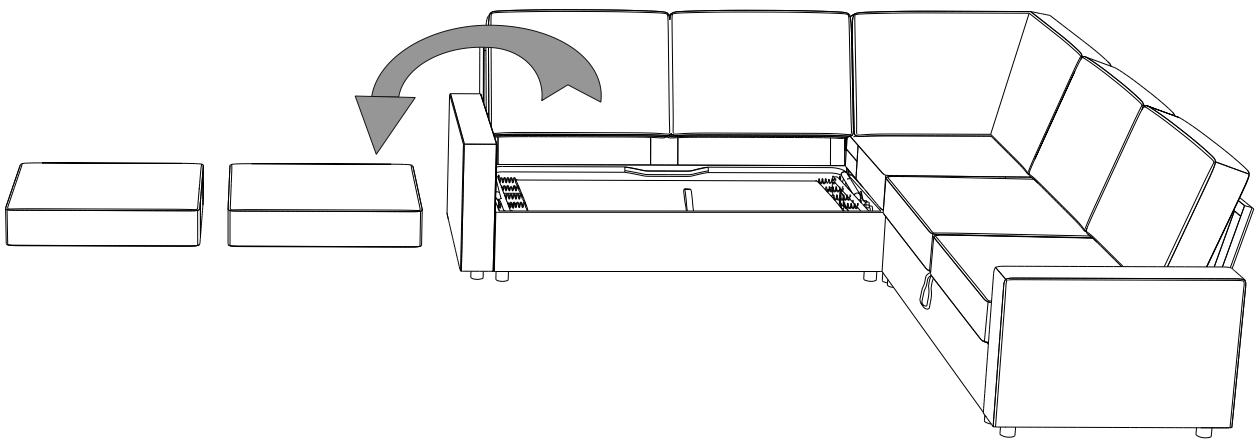

Remove Part 10 seat cushions ×2 from Part 03.

Step 22

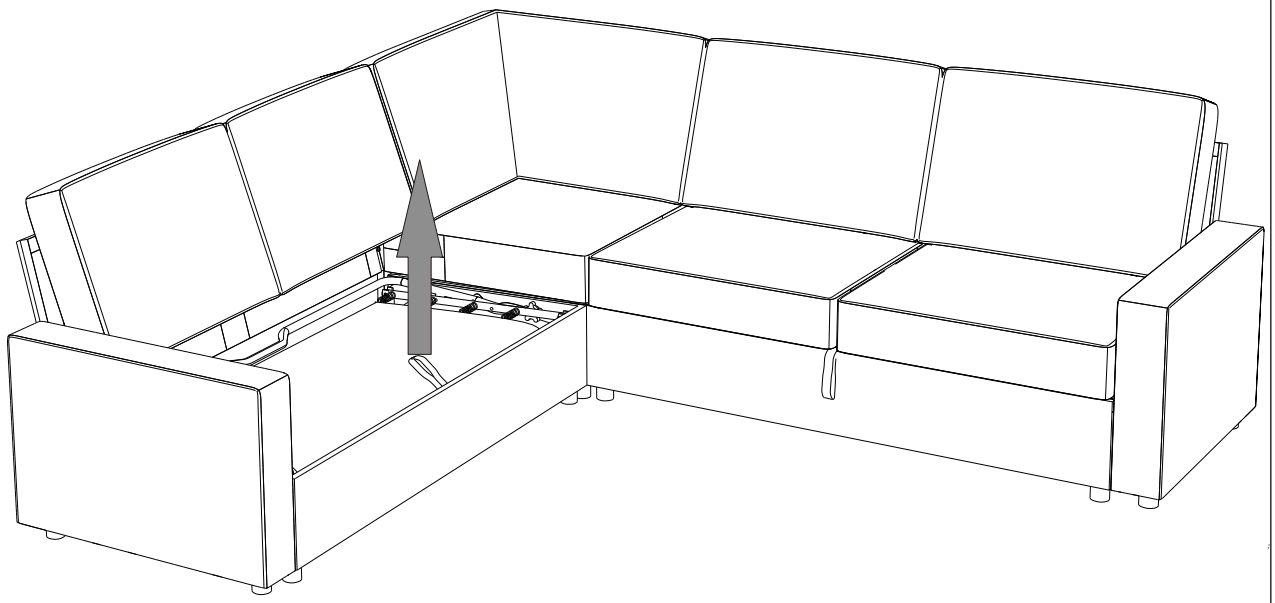

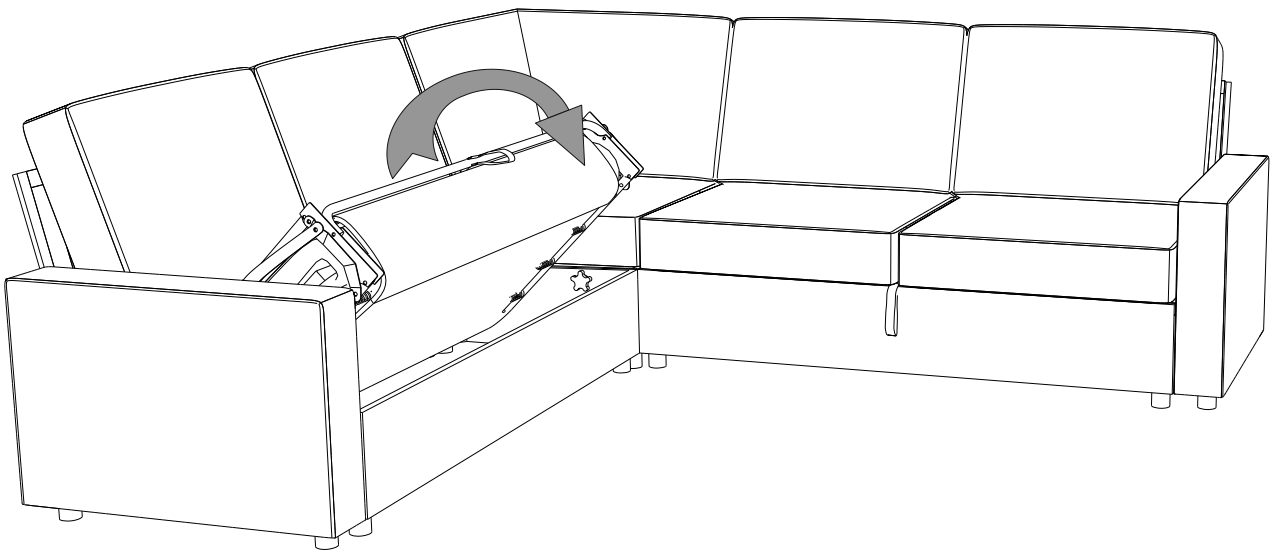

Email : **service@grandtunnel.com**

Step 23

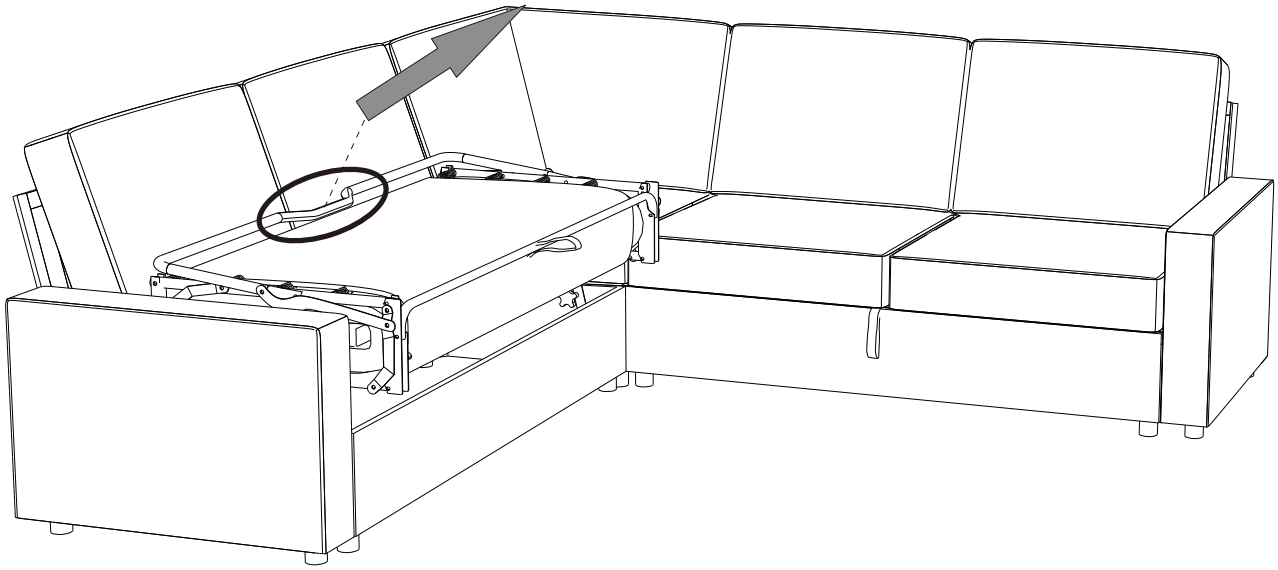

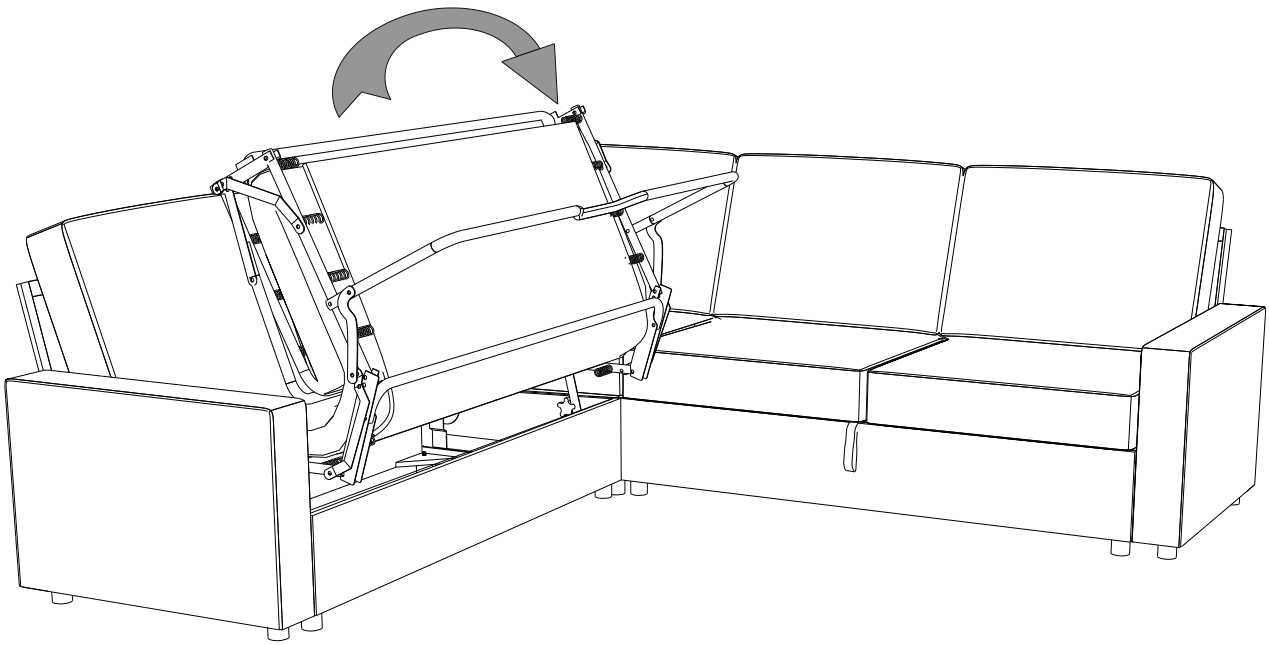

Step 24

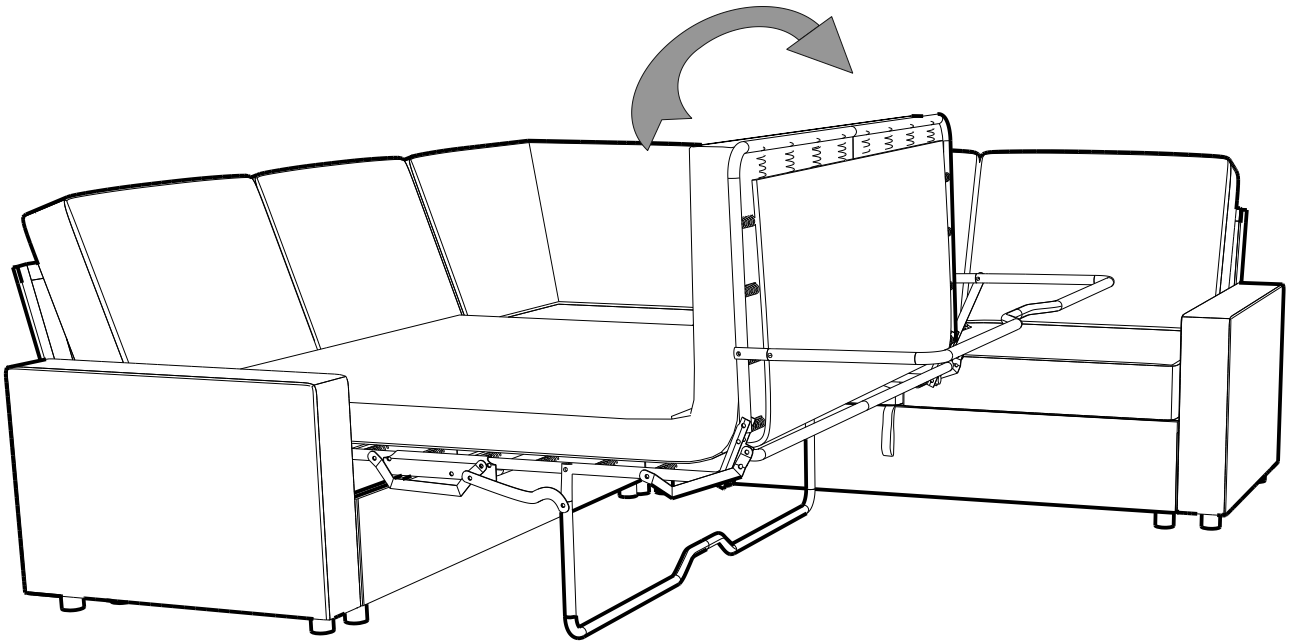

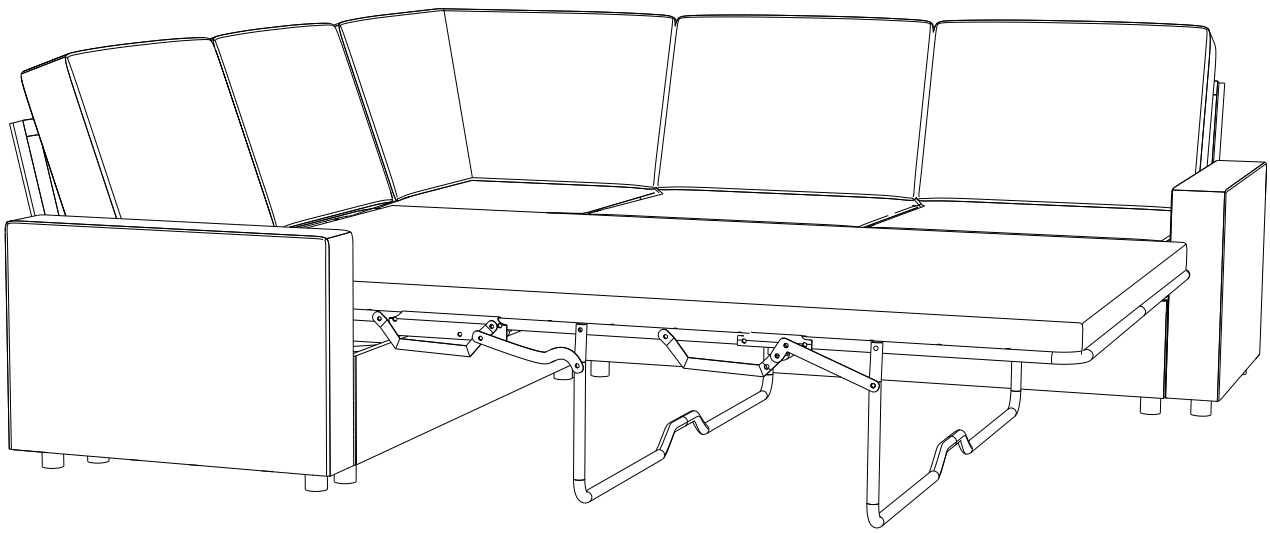

Email : **service@grandtunnel.com**

Step 25

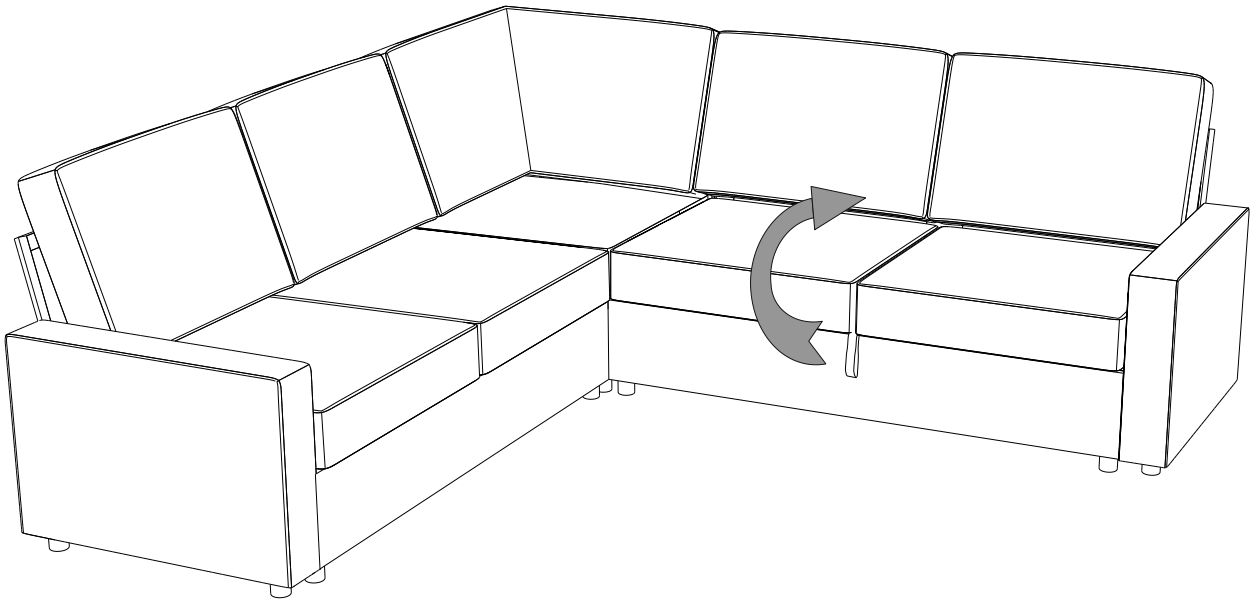

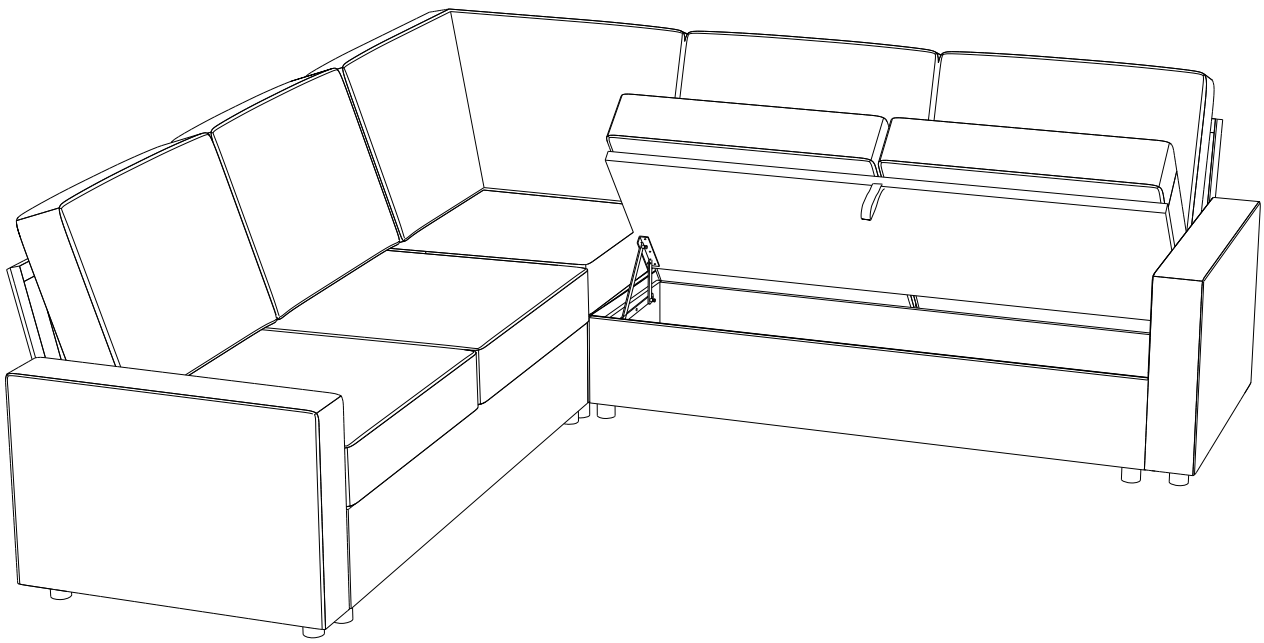

Maintenance



- Avoid direct sunlight, preferably placed in a place that can avoid sunlight, or use translucent tulle curtains to block the sun.
- Vacuum at least once a week, paying particular attention to removing dust accumulation between fabric structures.
- Sofa cushions are turned over once a week to evenly distribute wear.
- If stained, use a clean cloth dipped in water to wipe. In order to avoid leaving marks, it is best to wipe from the periphery of the stain. Velvet furniture should not be dipped in water and should use a dry cleaning agent.
- All cloth covers and bushings should be dry-cleaned, not washed, not bleached.
- If you find loose thread, do not tear it with your hand; it is best to cut the thread neatly with scissors.

Email : **service@grandtunnel.com**

Sofa

SKU
C002599011
C002599012
C002599013
C002599014
C002599021
C002599022
C002599023
C002599024

V1.0