BAMBOO COAT RACK

Natural / Stylish / Unique

INSTRUCTION

HARDWARE

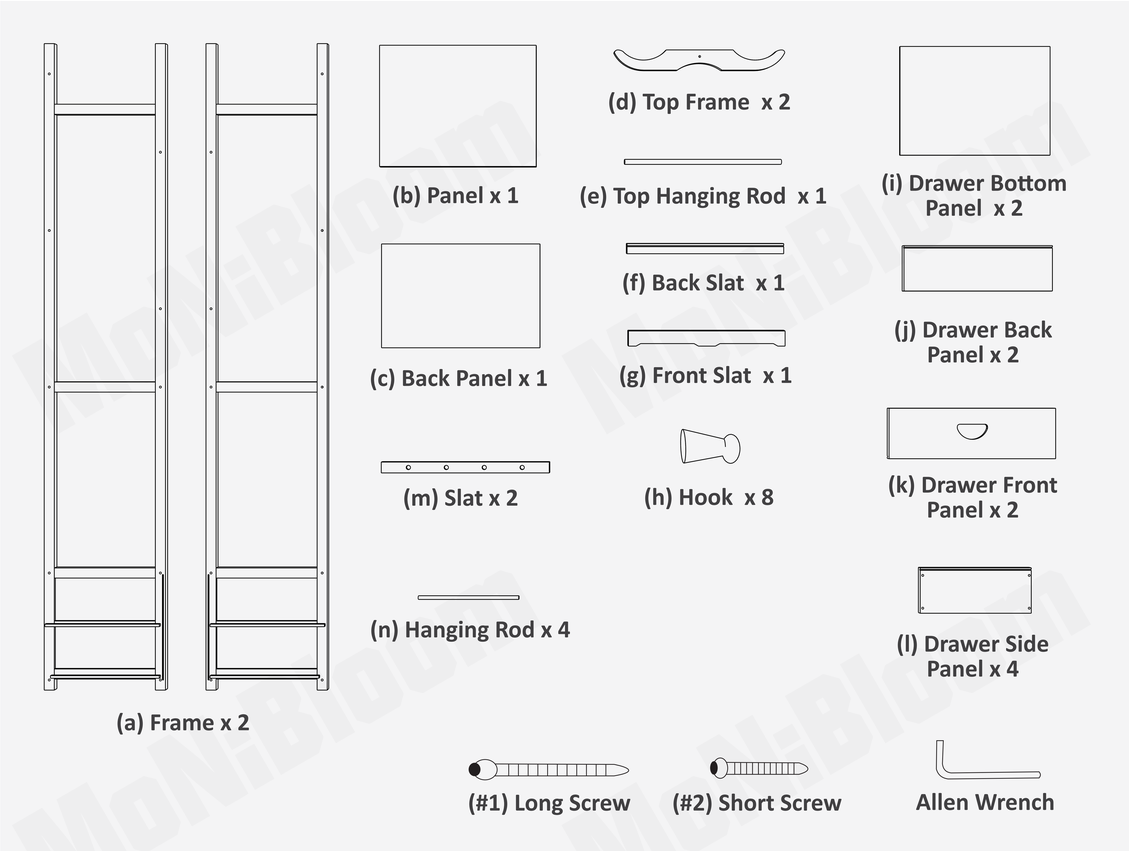

⚠ ATTENTION

① Please always read and follow the assembly, maintenance and operating instruction.

② Do not discard any of the packaging until you have checked that you have all the parts and pack of fittings.

③ Keep children away during assembly. This item contains small parts which can be swallowed by children.

④ Wipe frames with water gently, do not use bleach, acid, or other solvents.

⑤ Check all hardwares before assembly. Incorrect parts used may lead to damage.

Scan the QR code to view the assembly video.

FINISHED PRODUCT

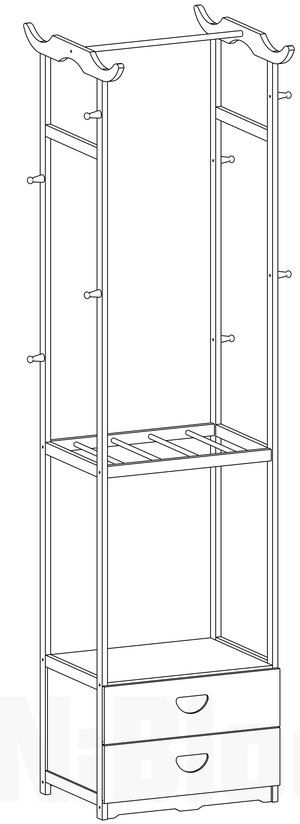

1

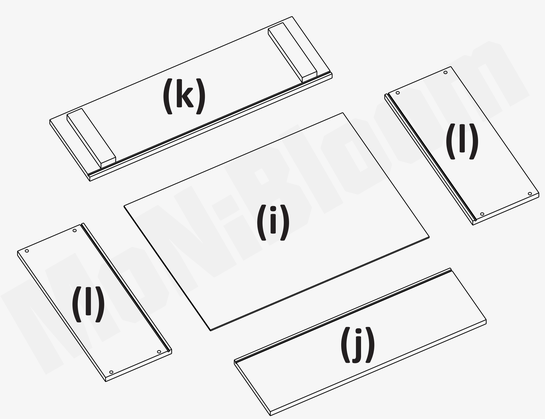

2

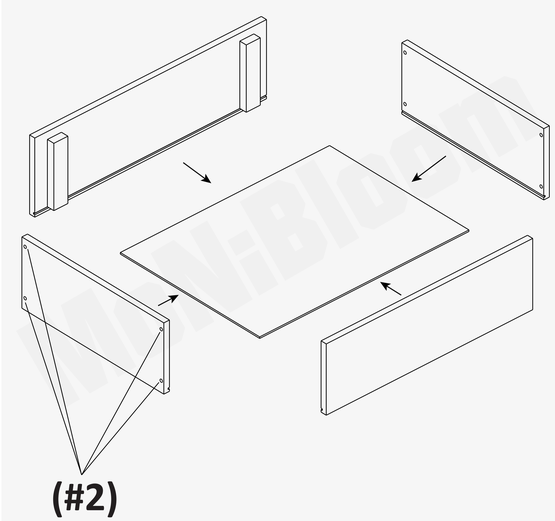

© 2020-2025 by Pundarika LLC - MoNiBloom

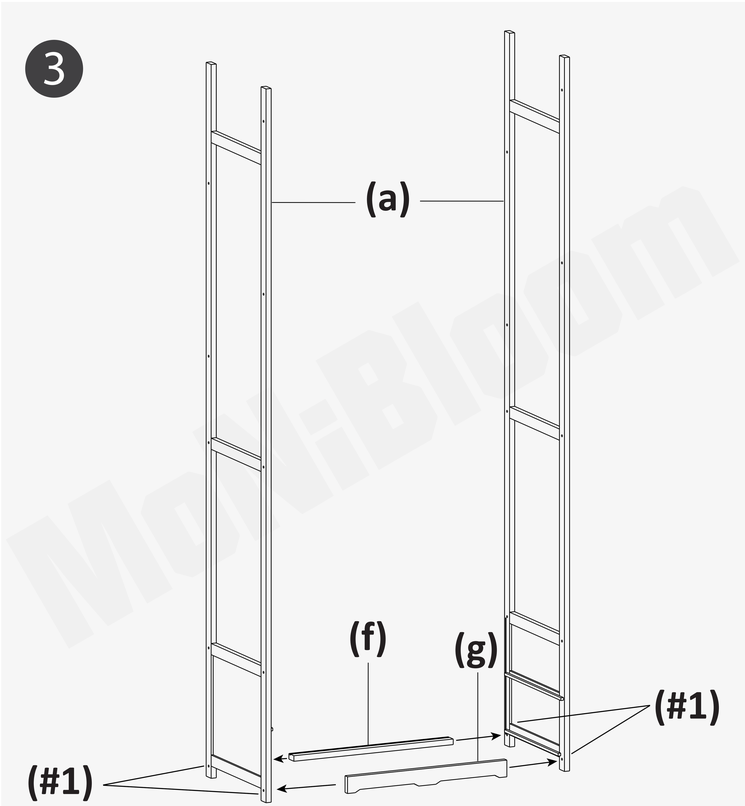

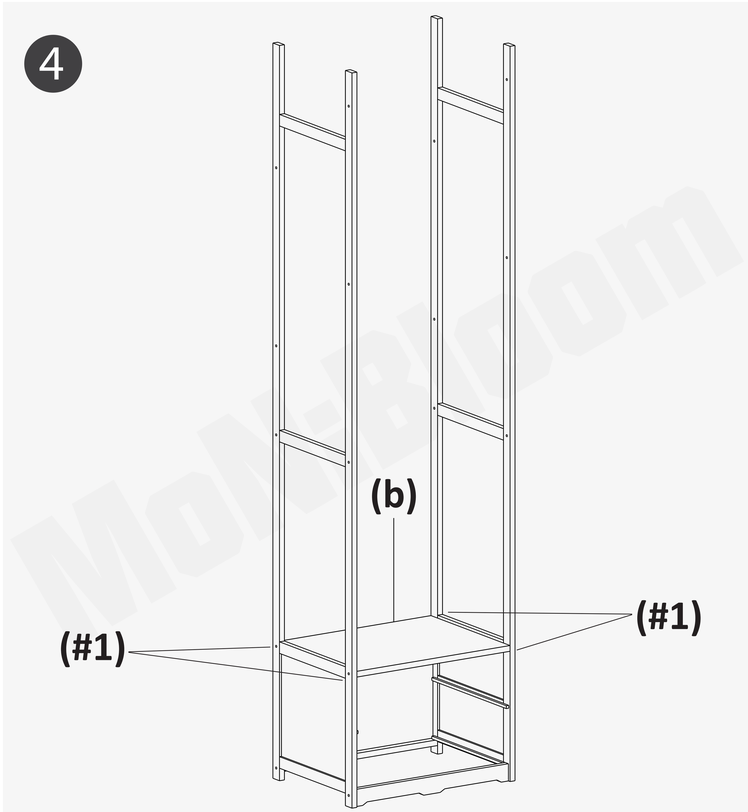

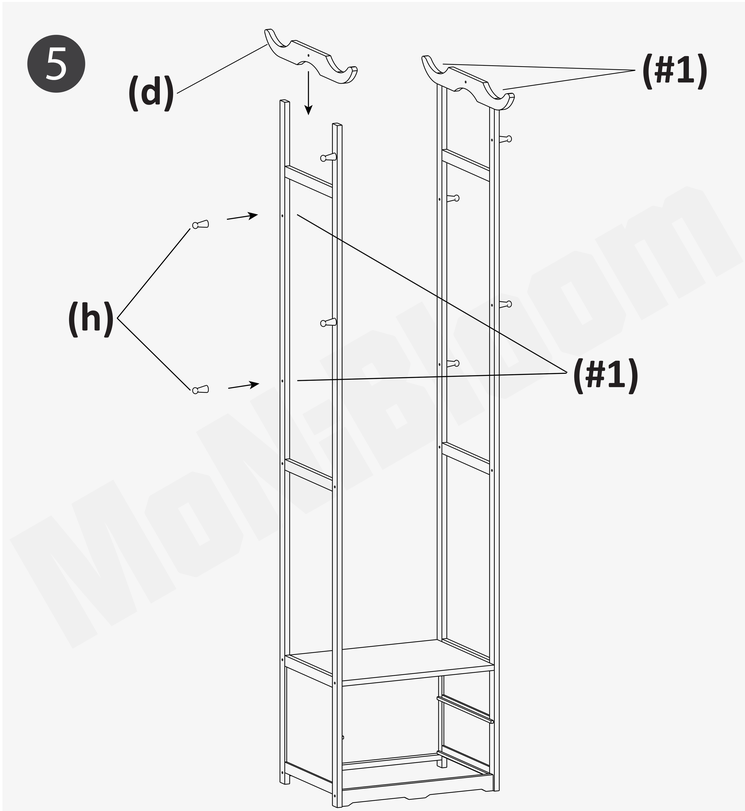

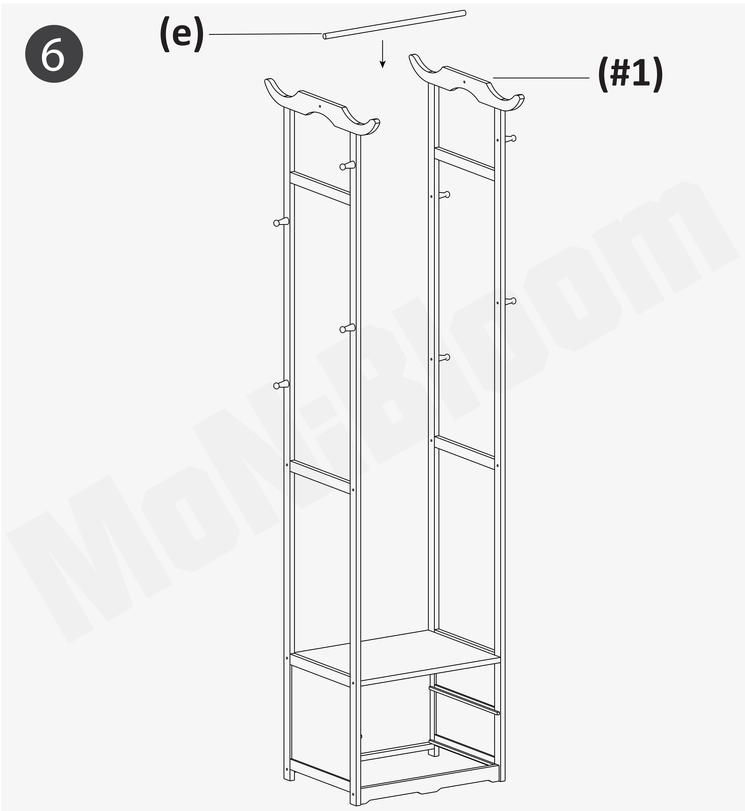

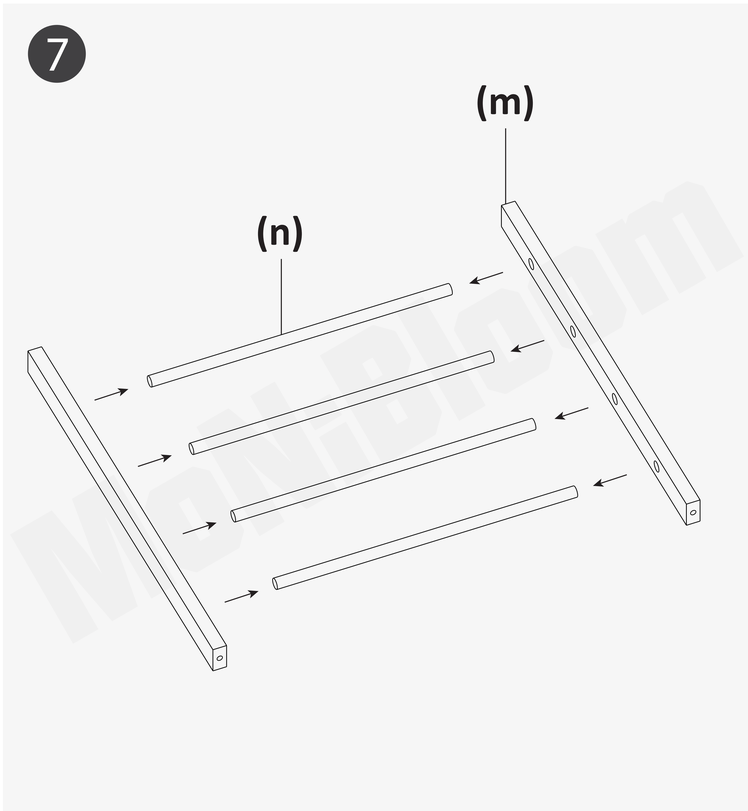

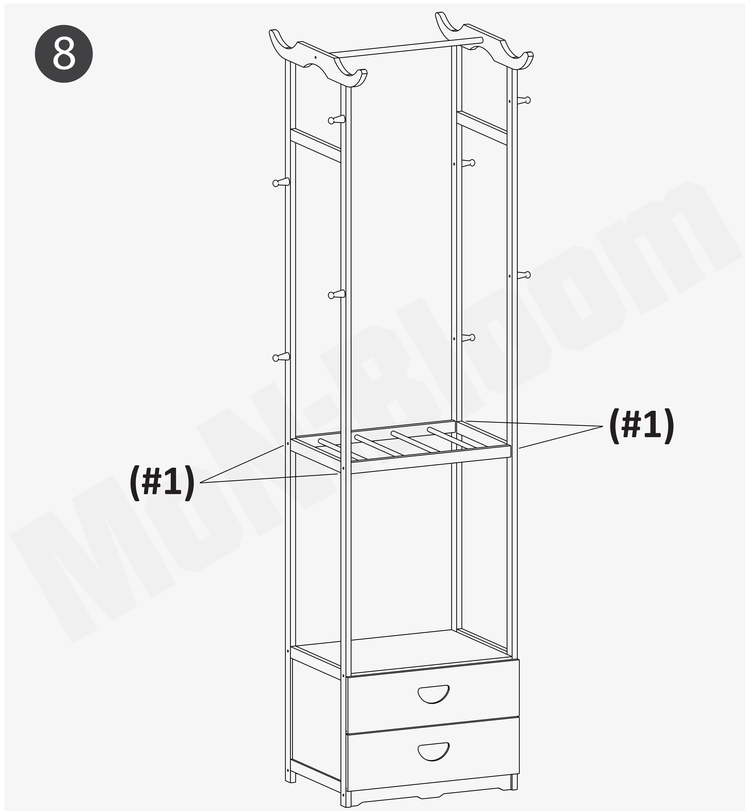

© 2020-2025 by Pundarika LLC - MoNiBloom