ASSEMBLY INSTRUCTION

N751P280593

N751P280594

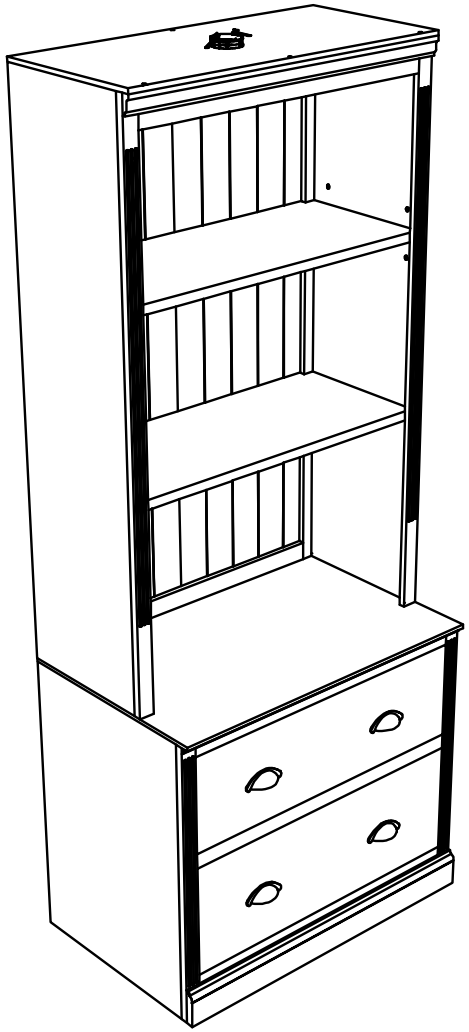

PARTS LIST - N751P280593

A 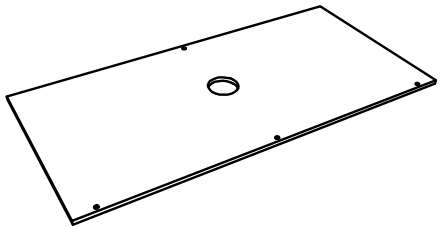 Quantity: 1 pc	B 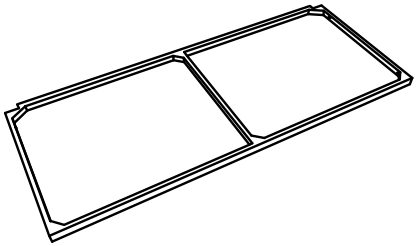 Quantity: 2 pcs	C_L 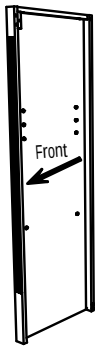 Quantity: 1 pc	C_R 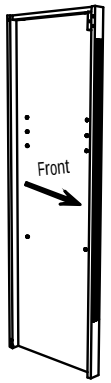 Quantity: 1 pc
D 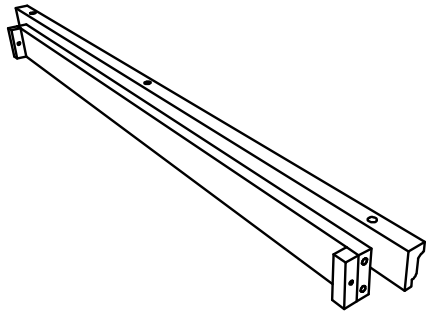 Quantity: 1 pc	E 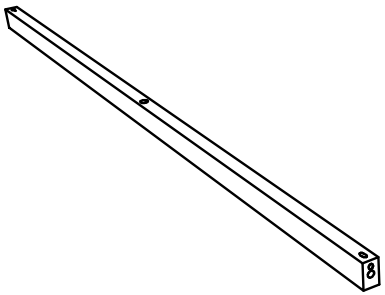 Quantity: 1 pc	F 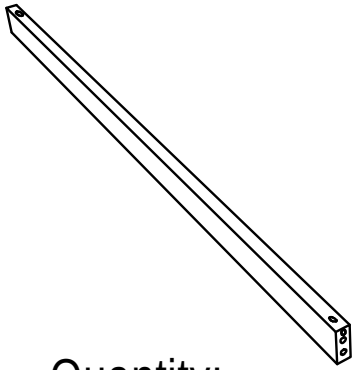 Quantity: 1 pc	G 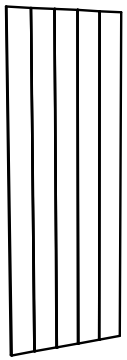 Quantity: 2 pcs

PARTS LIST - N751P280594

H 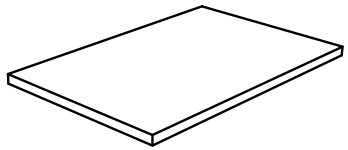 Quantity: 1 pc	IL 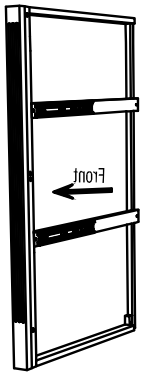 Quantity: 1 pc	IR 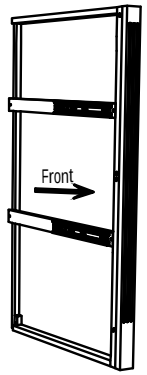 Quantity: 1 pc	J 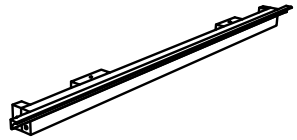 Quantity: 1 pc
K 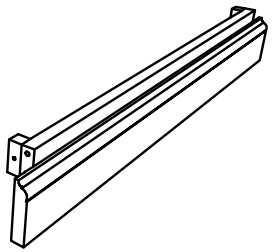 Quantity: 1 pc	L 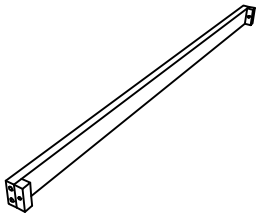 Quantity: 1 pc	M 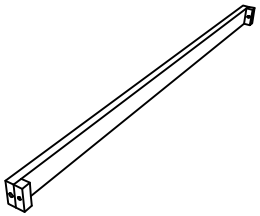 Quantity: 1 pc	N 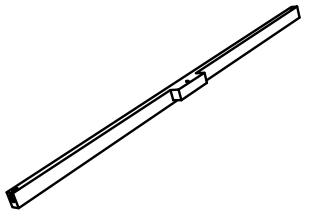 Quantity: 1 pc

PARTS LIST - N751P280594

O 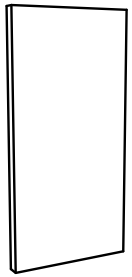 Quantity: 2 pcs	P_1 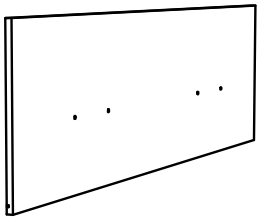 Quantity: 1 pc	Q_1 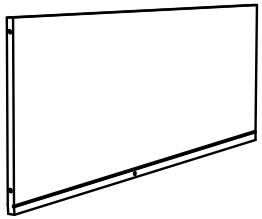 Quantity: 1 pc	P_2 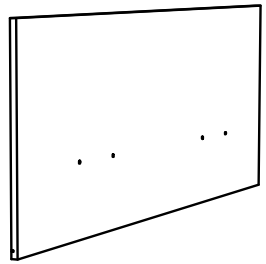 Quantity: 1 pc
Q_2 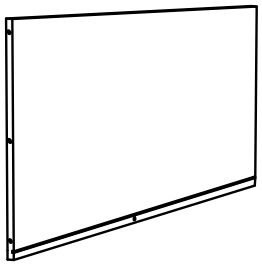 Quantity: 1 pc	R 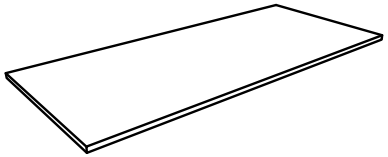 Quantity: 2 pcs	S 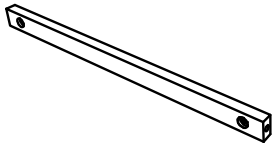 Quantity: 2 pcs	T_{L1} 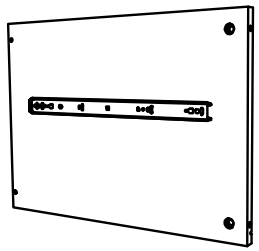 Quantity: 1 pc

PARTS LIST - N751P280594

TR1 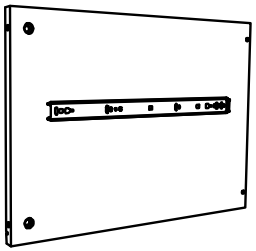 Quantity: 1 pc	TL2 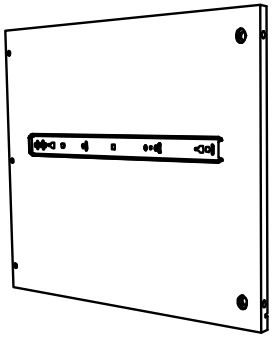 Quantity: 1 pc	TR2 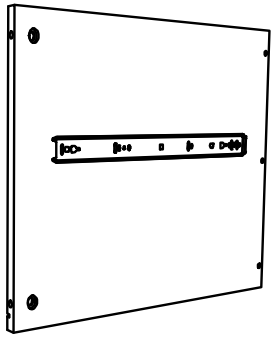 Quantity: 1 pc	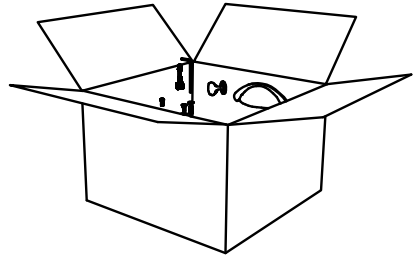 HARDWARE

HARDWARE LIST

1 Allen key Quantity: 1 pc	2 Cam lock pin Cam lock Quantity: 12 pcs + extra 1pc	3 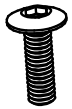 6x30mm Quantity: 35 pcs + extra 3pcs	4 6x16mm Quantity: 27 pcs + extra 3pcs	5 5x15mm Quantity: 8 pcs + extra 1pc	6 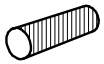 8x30mm Quantity: 20 pcs + extra 2pcs	7 4x30mm Quantity: 16 pcs + extra 1pc	8 3x15mm Quantity: 46 pcs + extra 3pcs	9 Quantity: 4 pcs
10 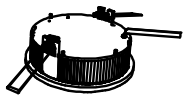 Quantity: 1 pc	11 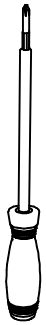 Screwdrivers Quantity: 1 pc	12 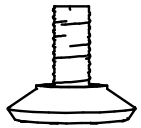 15x20mm Quantity: 4 pcs	13 20x80mm Quantity: 2 pcs	14 4x20mm Quantity: 4 pcs	15 Quantity: 2 pcs	16 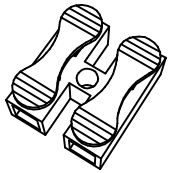 Quantity: 2 pcs		

COMPONENTS - KEY DIAGRAM

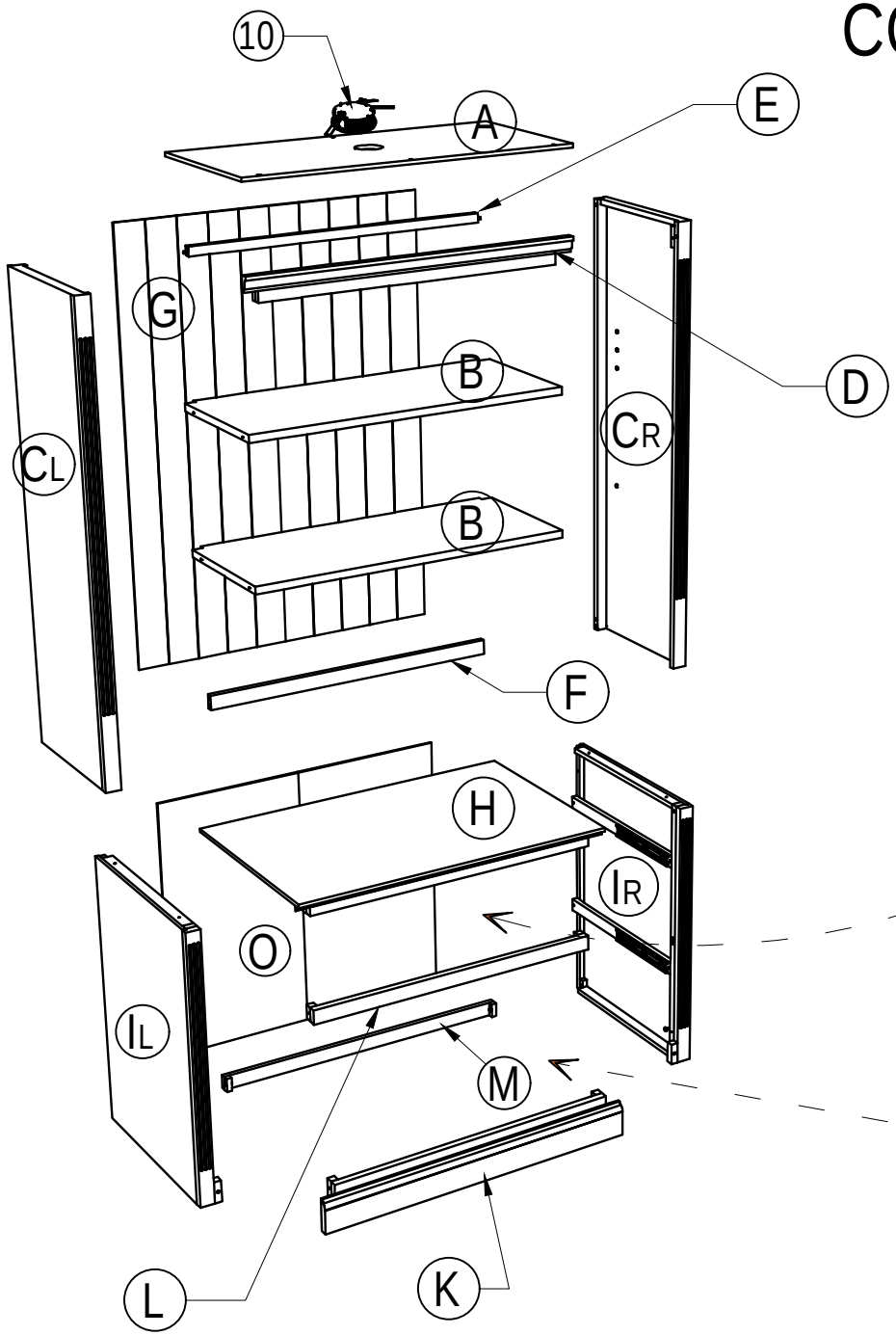

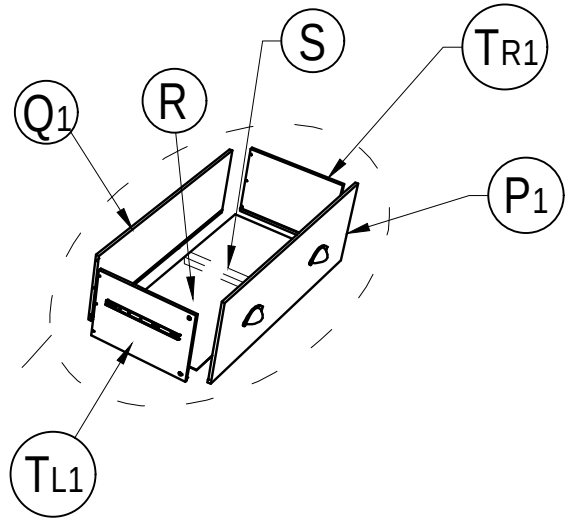

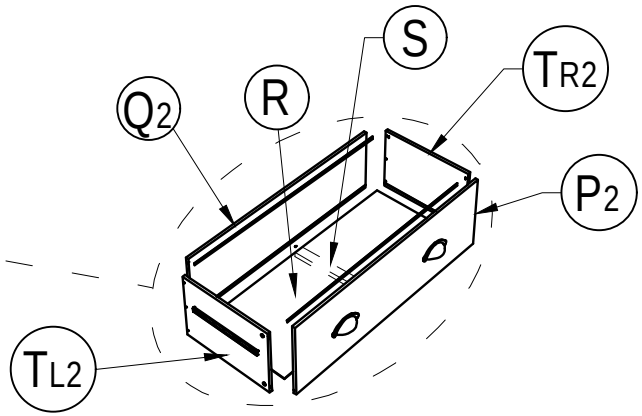

COMPONENTS - KEY DIAGRAM

N751P280593

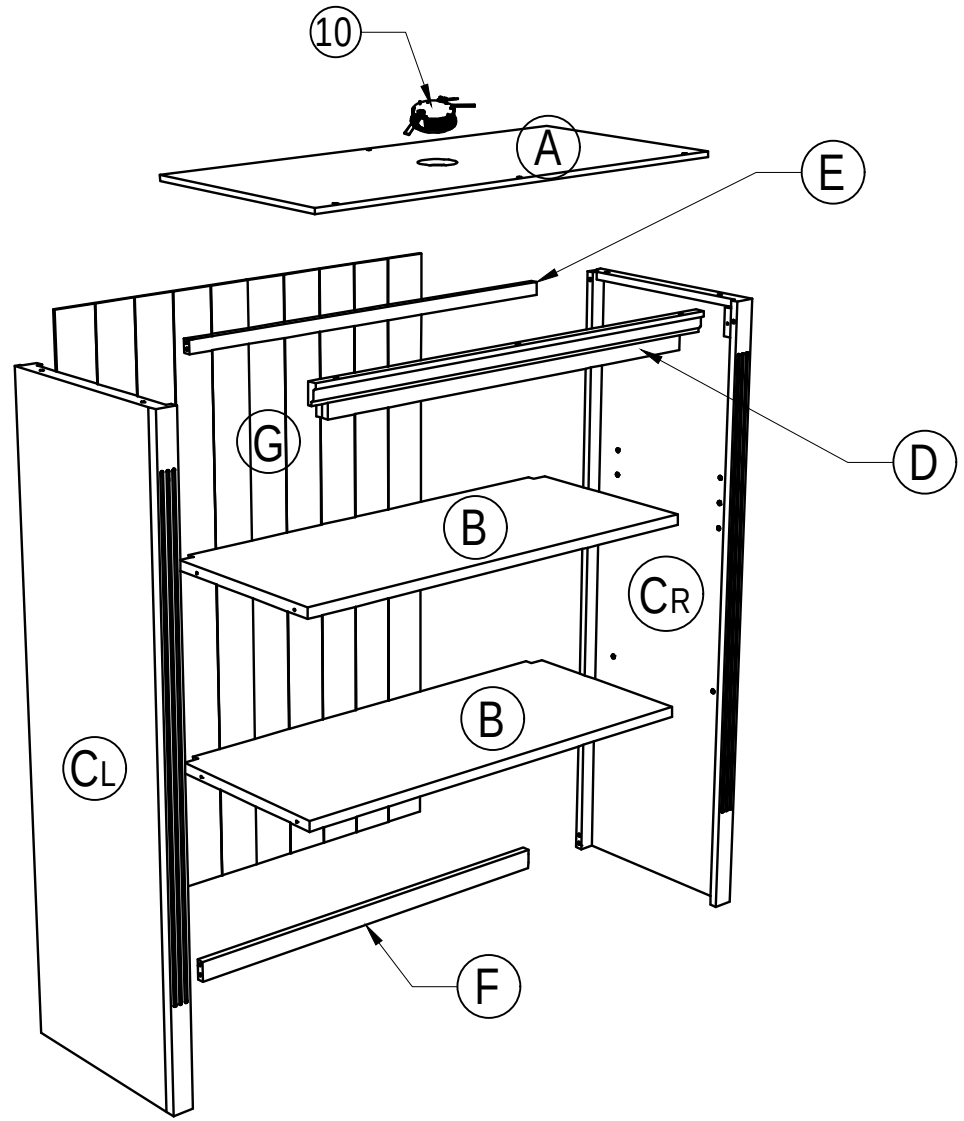

STEP 1

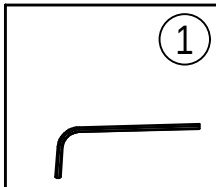

1 pc

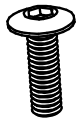

6x30mm
1 pc

6x16mm
1 pc

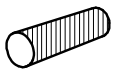

8x30mm
4 pcs

4x30mm
2 pcs

1 pc

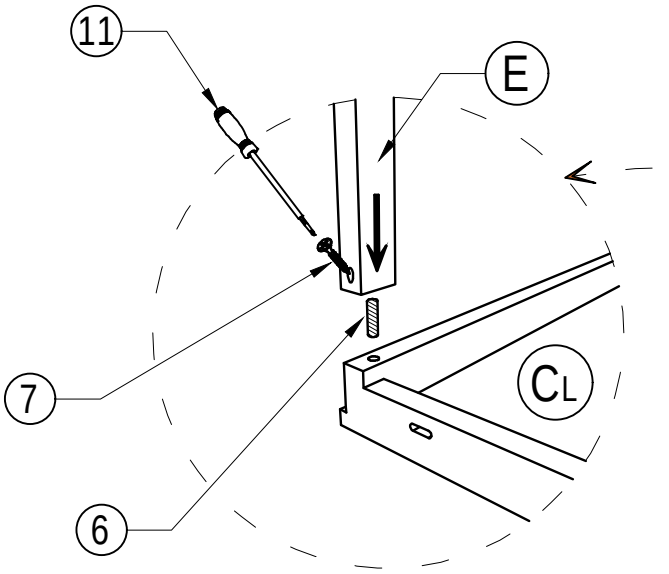

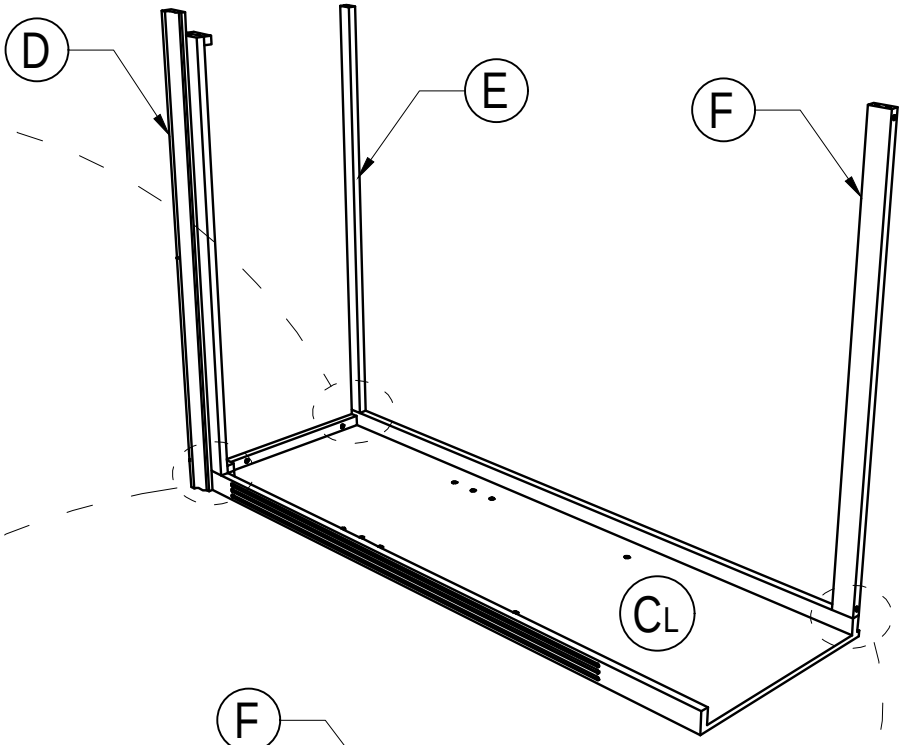

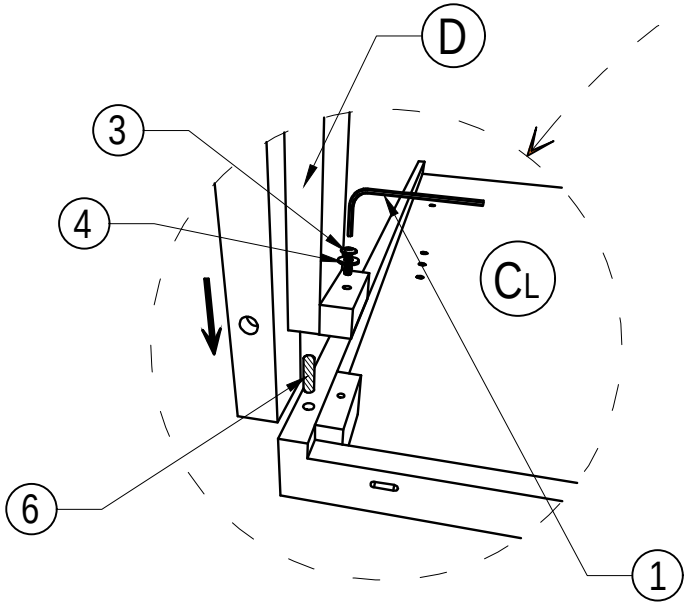

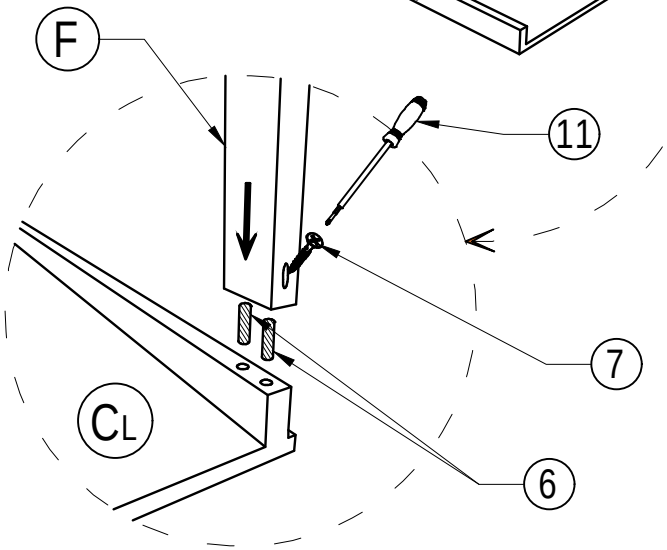

STEP 2

1

1 pc

3

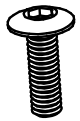

6x30mm
4 pcs

4

6x16mm
4 pcs

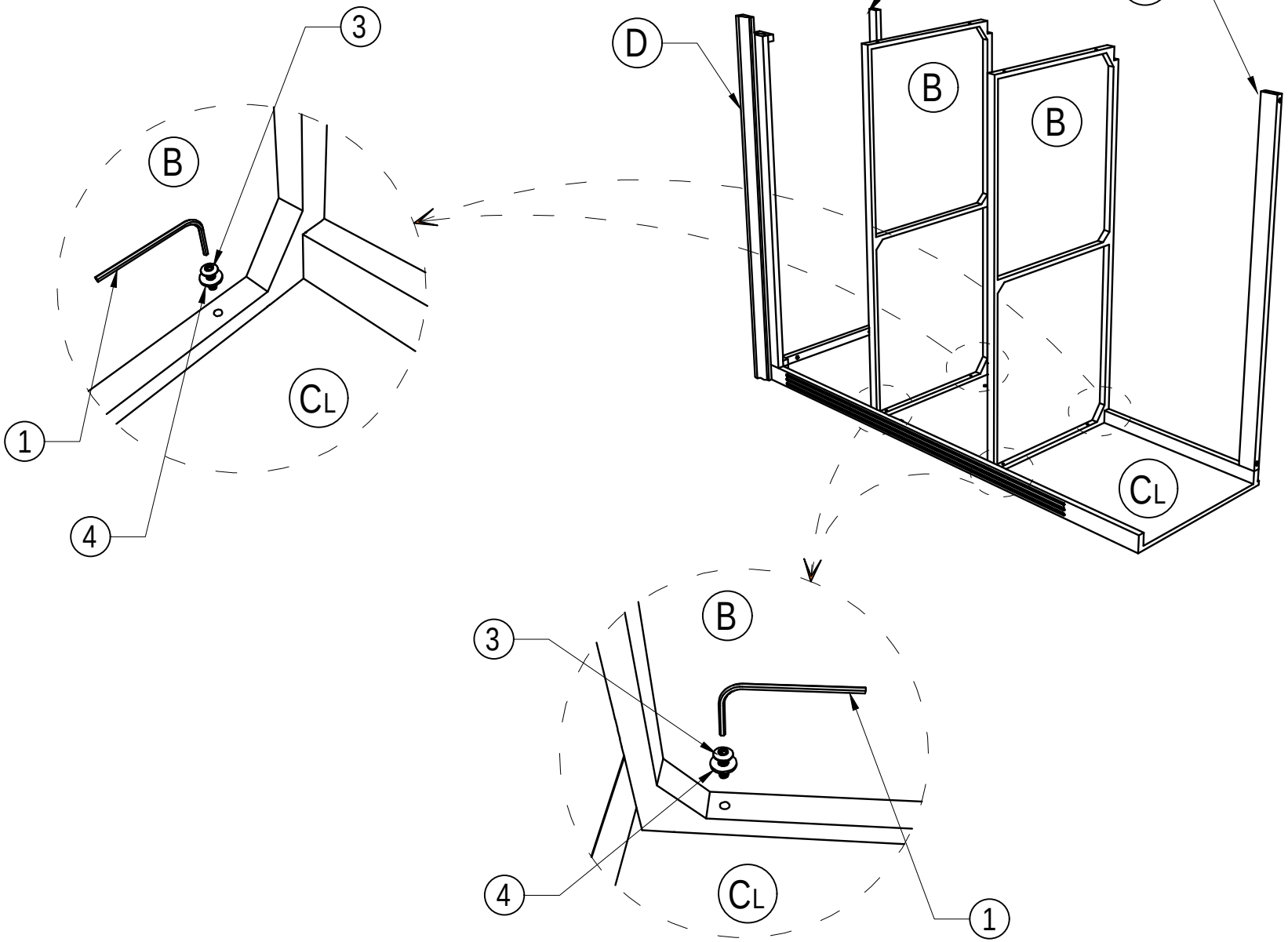

STEP 3

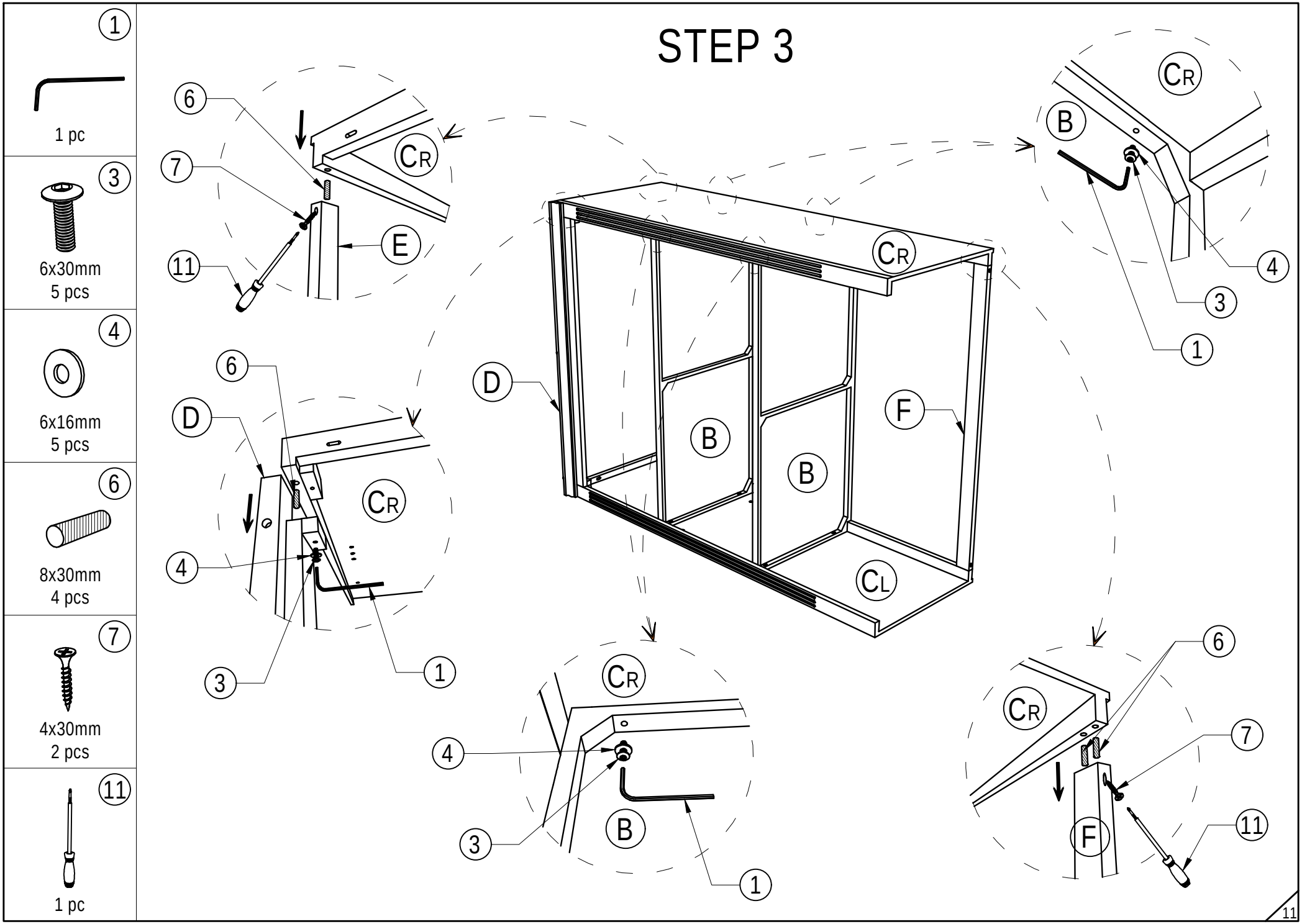
1
1 pc
3
6x30mm
5 pcs
4
6x16mm
5 pcs
6
8x30mm
4 pcs
7
4x30mm
2 pcs
11
1 pc
6
7
11
E
CR
D
4
3
1
B
CL
F

STEP 4

1

1 pc

3

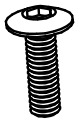

6x30mm
4 pcs

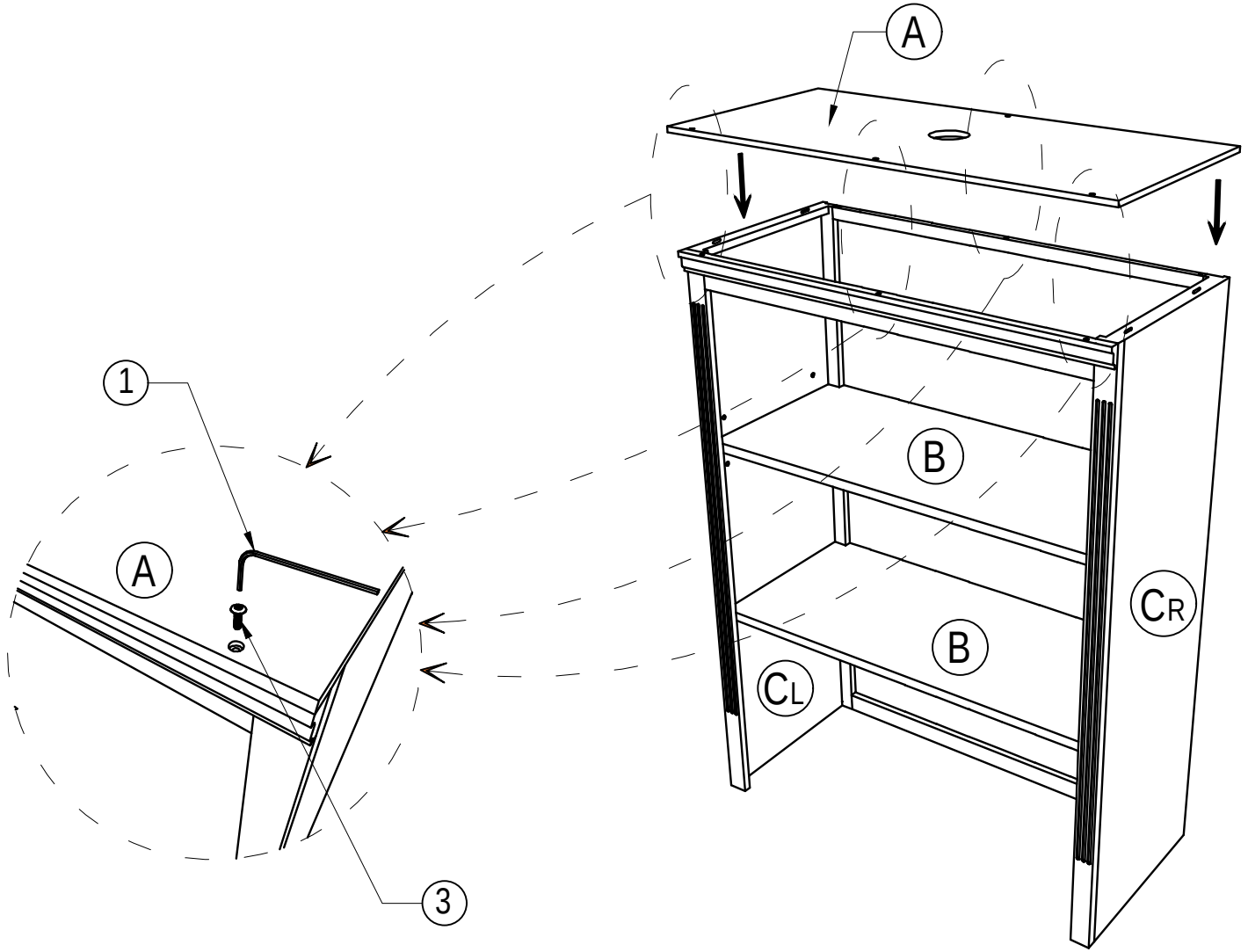

STEP 5

1

1 pc

3

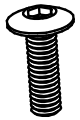

6x30mm
4 pcs

4

6x16mm
4 pcs

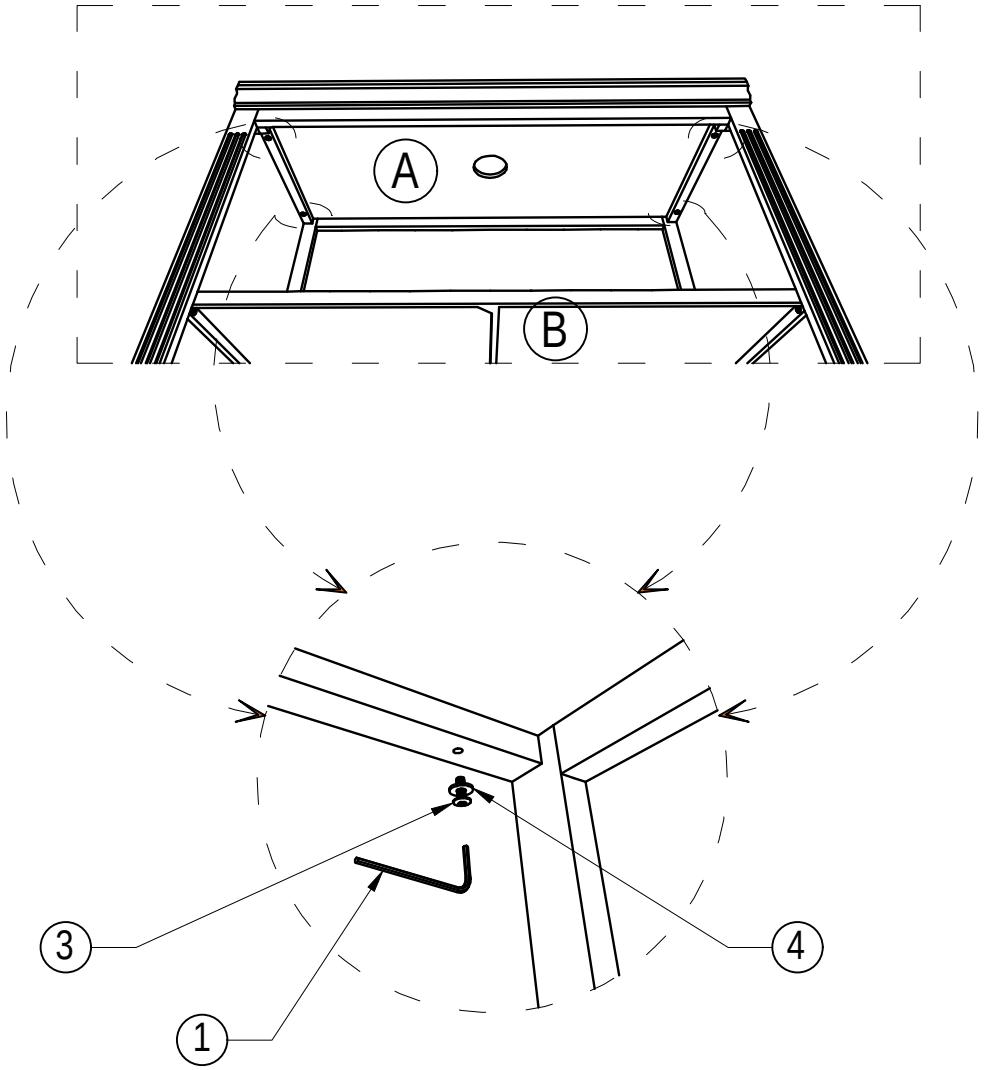

STEP 6

8

3x15mm
24 pcs

11

1 pc

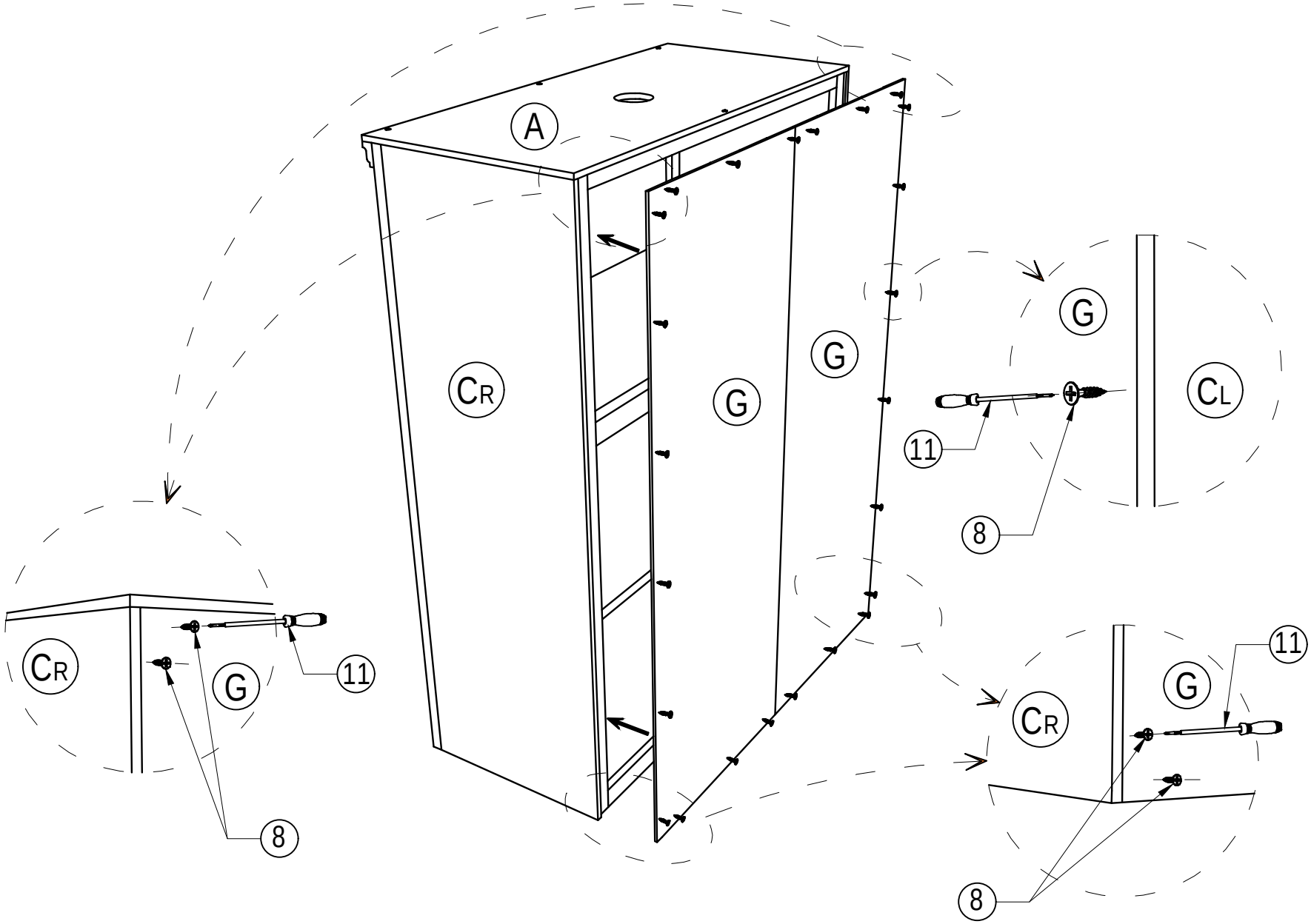

10

1 pc

16

2 pcs

STEP 7

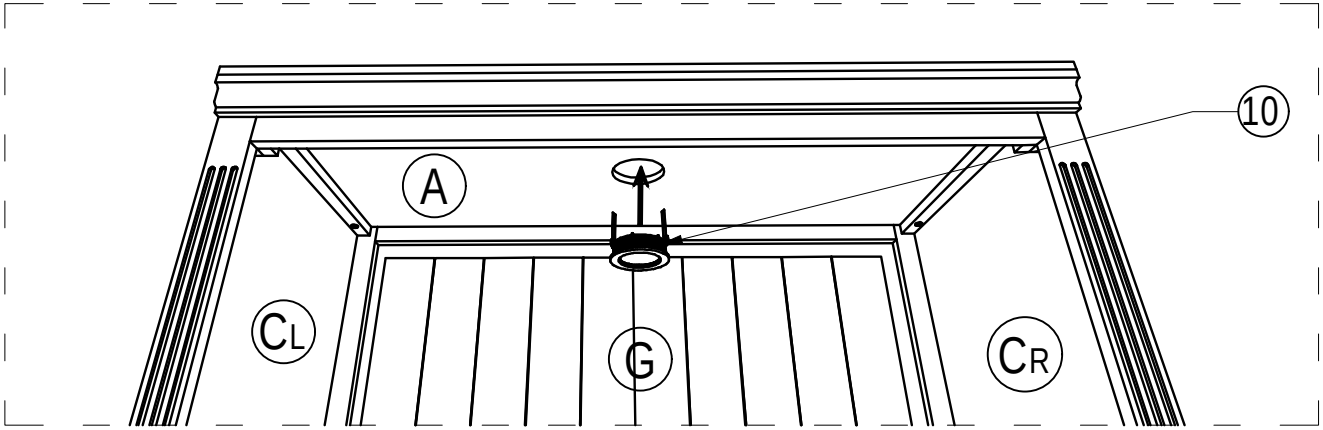

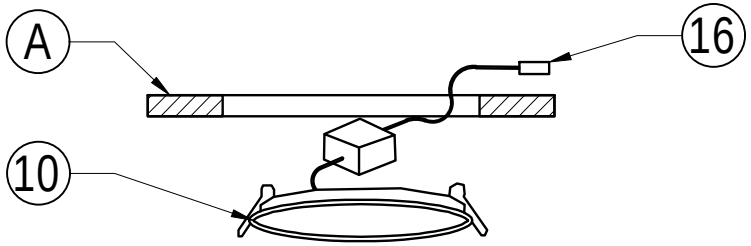

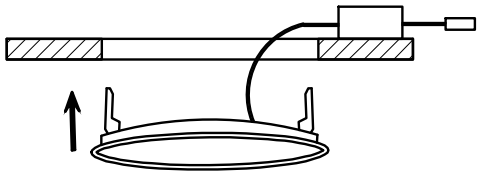

1. First, turn off the power at home. After turning off the power at home, put on insulating gloves to handle it. Connect the wires of the lamp and the wires at home through component #16 (insert several wires into the slot of component #16), and you can use it.

2. If you still don't understand, you can watch the video provided. The yellow wire in the video is the electrical wire that can be powered in the user's home.

STEP 8

1

1 pc

3

6x30mm
4 pcs

4

6x16mm
2 pcs

6

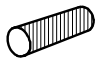

8x30mm
4 pcs

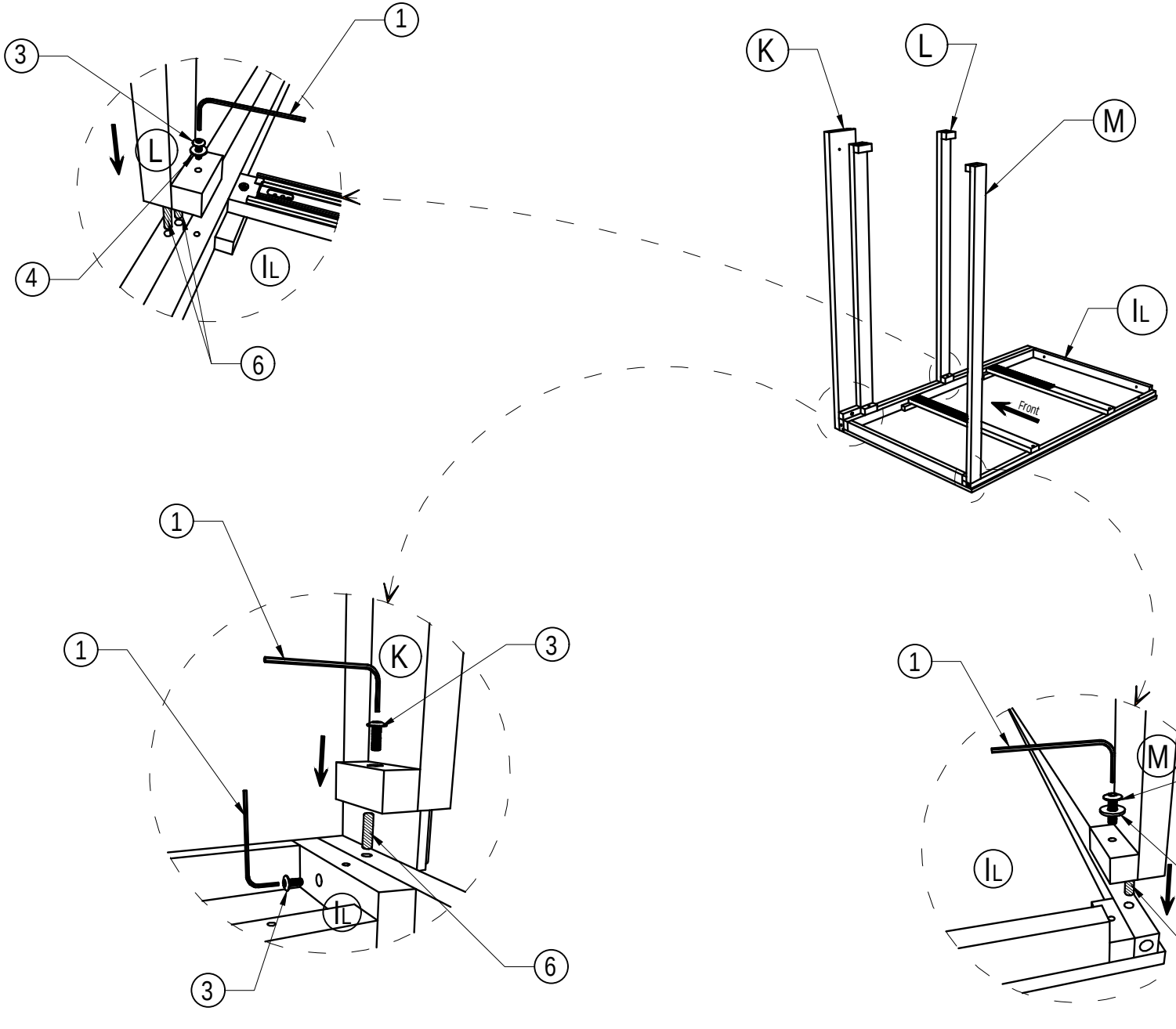

STEP 8

1

1 pc

3

6x30mm
4 pcs

4

6x16mm
2 pcs

6

8x30mm
4 pcs

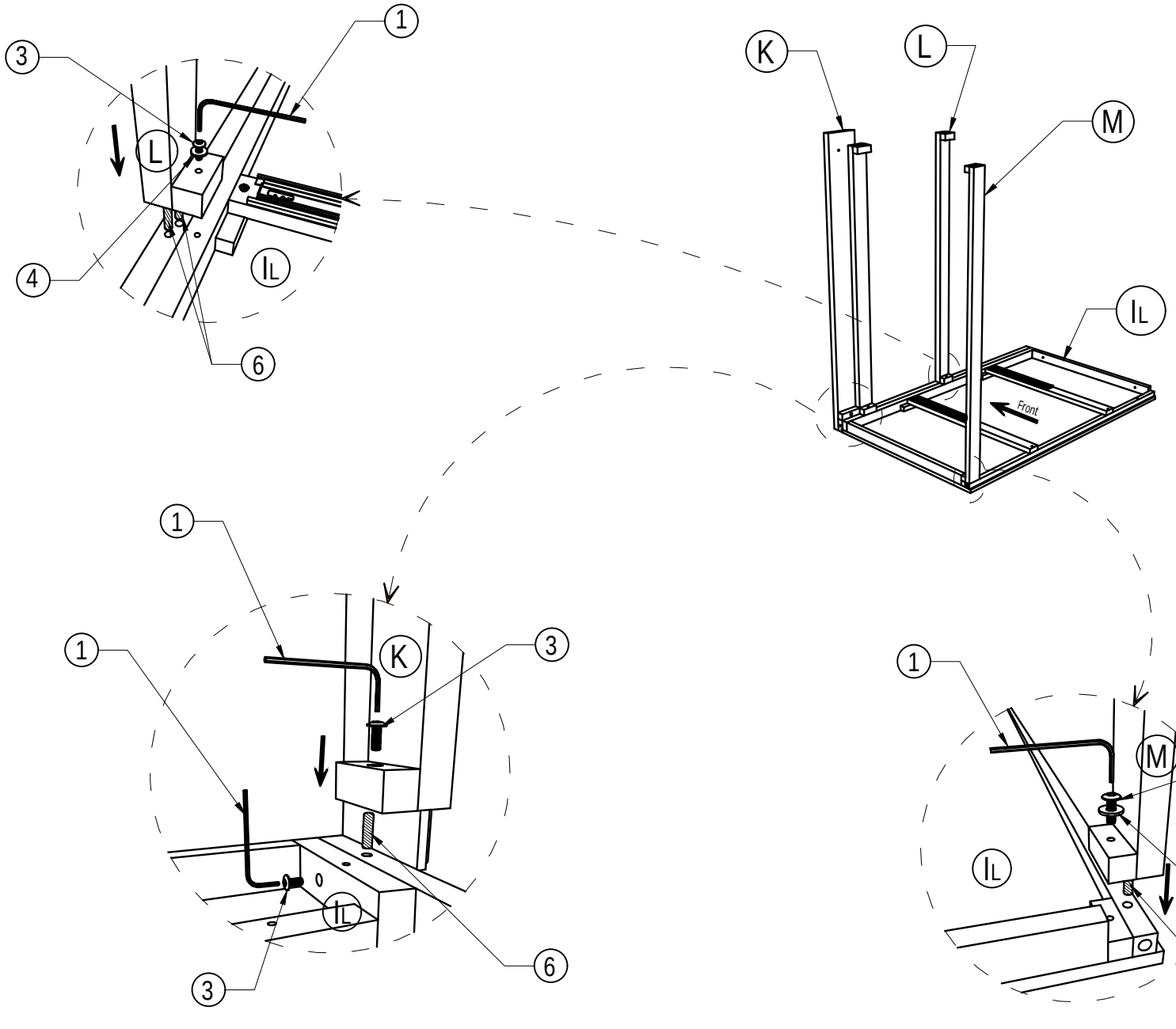

① 1 pc

③ 6x30mm 1 pc

④ 6x16mm 1 pc

⑥ 8x30mm 2 pcs

⑦ 4x30mm 1 pc

⑪ 1 pc

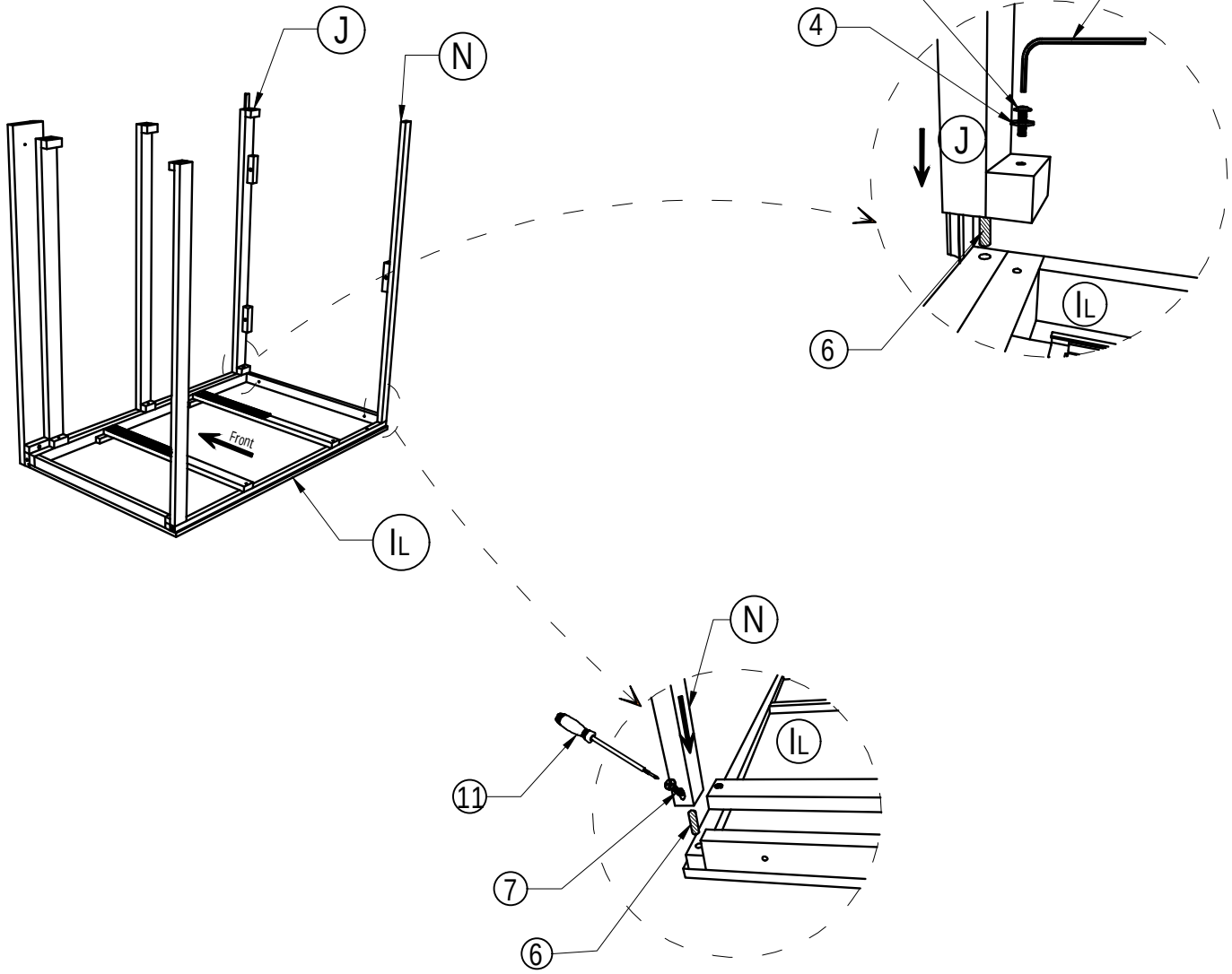

1

1 pc

3

6x30mm
4 pcs

4

6x16mm
2 pcs

6

8x30mm
4 pcs

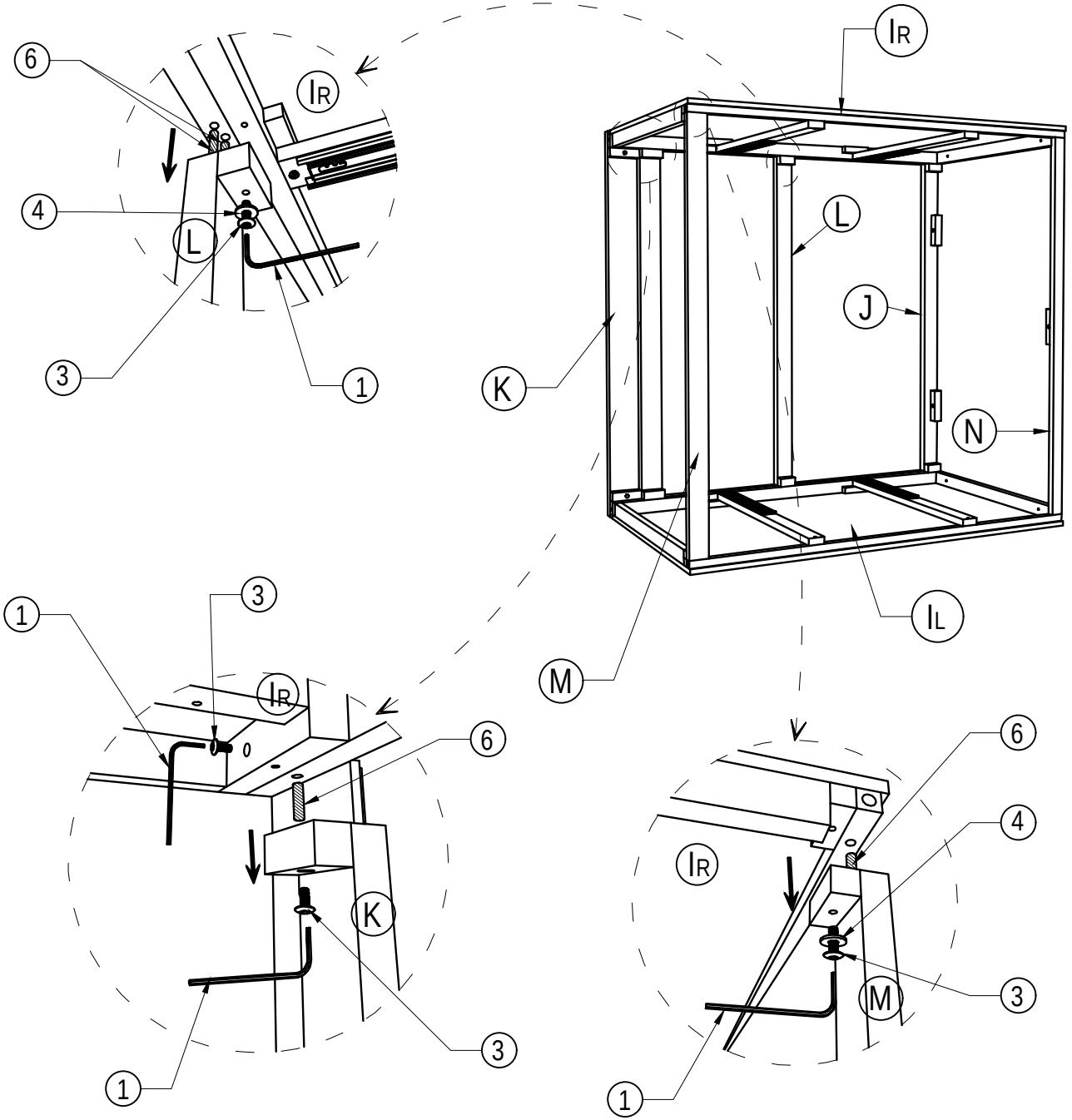

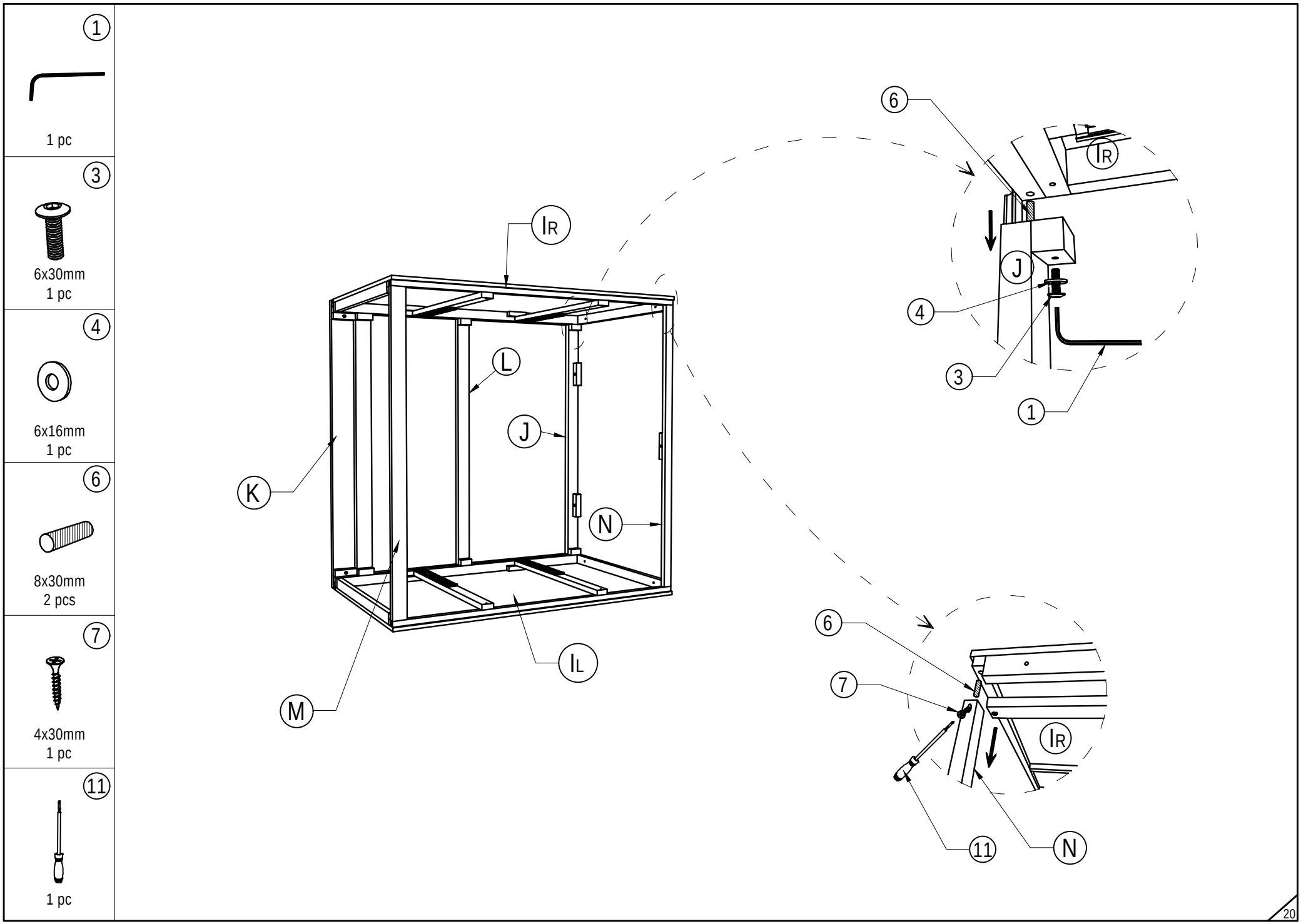
1
1 pc
3
6x30mm
1 pc
4
6x16mm
1 pc
6
8x30mm
2 pcs
7
4x30mm
1 pc
11
1 pc
IR
L
J
K
N
IL
M
6
IR
J
4
3
1
6
7
IR
11
N

STEP 10

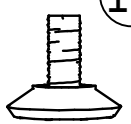

12

15x20mm
4 pcs

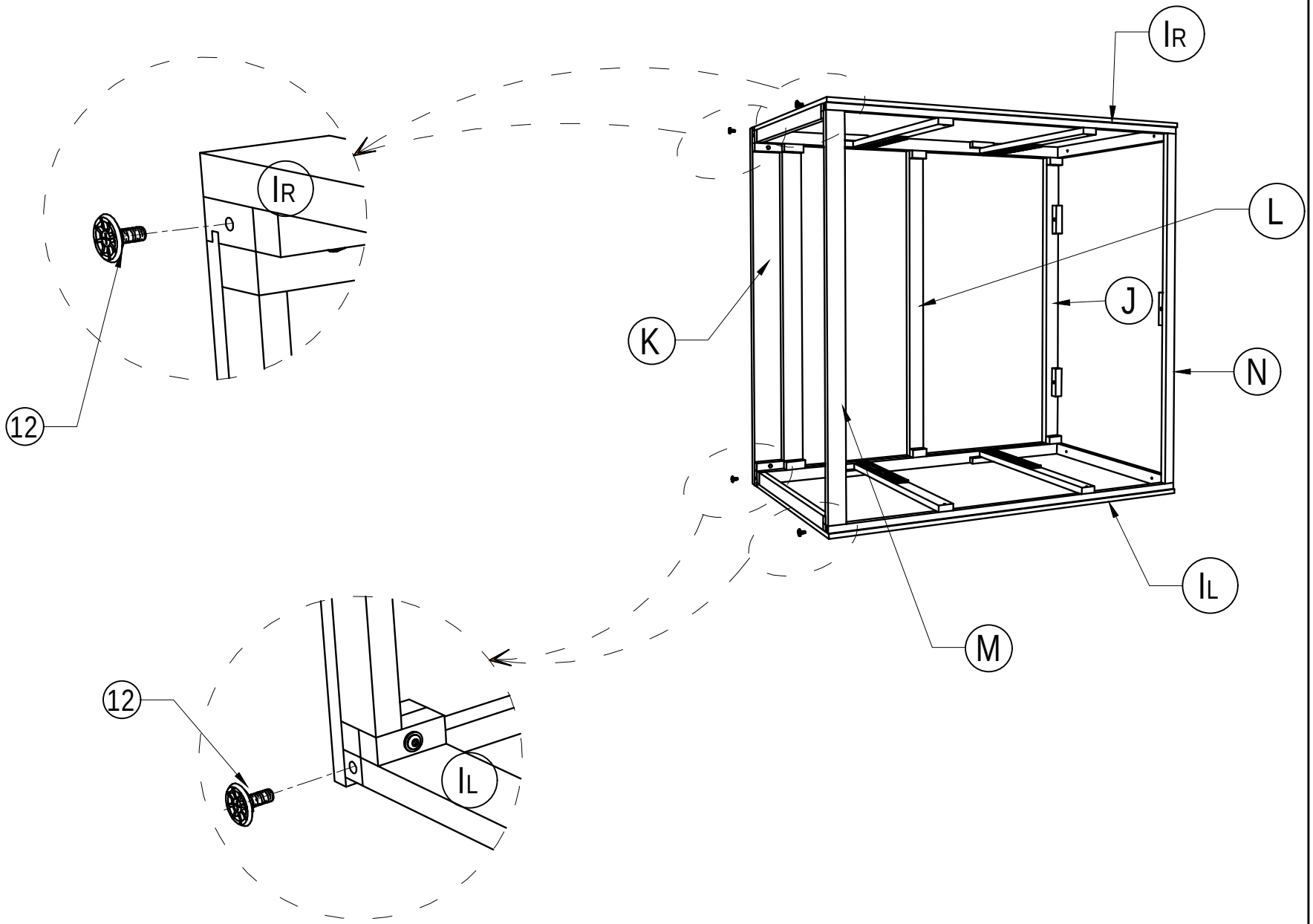

STEP 11

1

1 pc

3

6x30mm
7 pcs

4

6x16mm
7 pcs

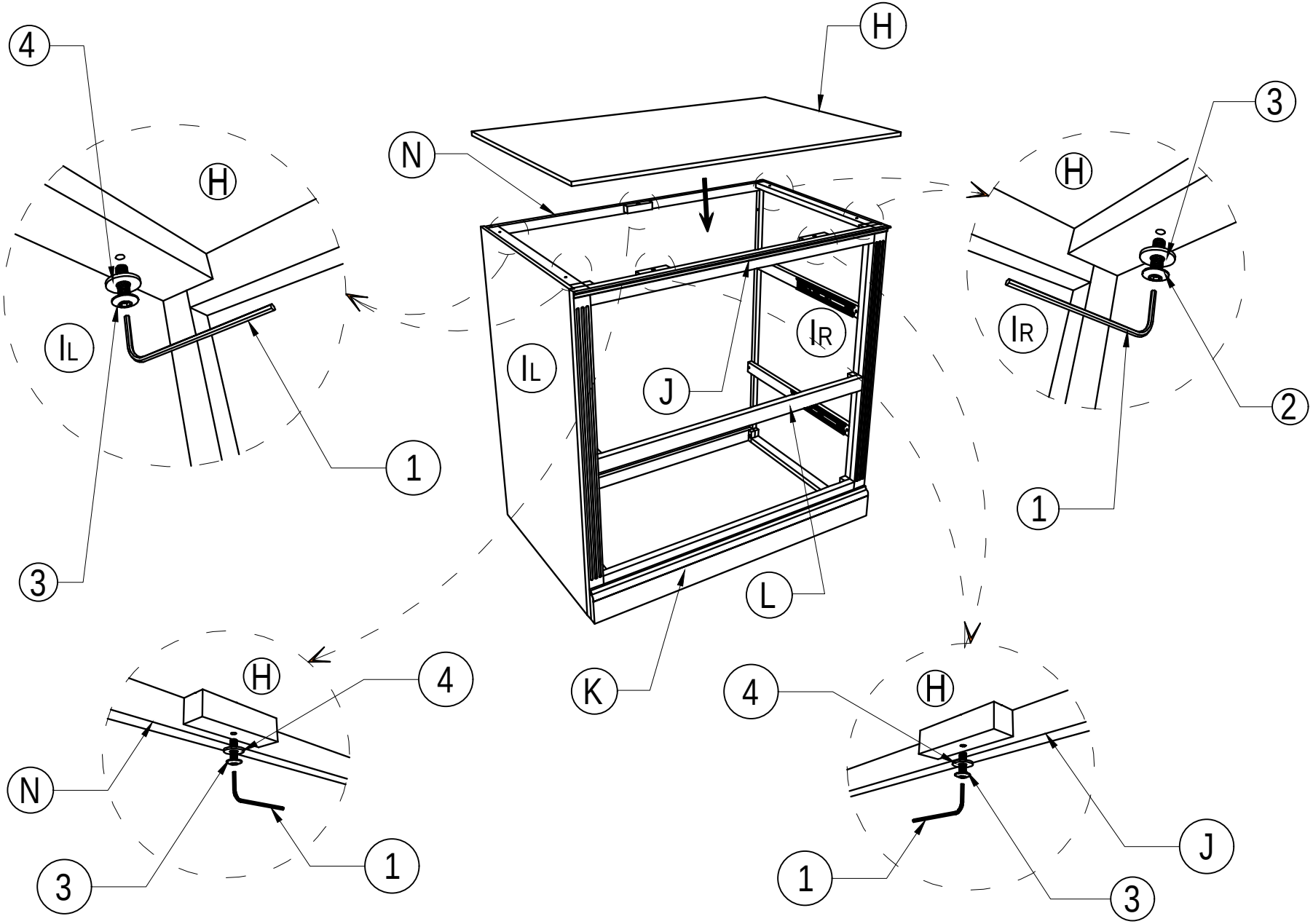

STEP 12

2

5 pcs

11

1 pc

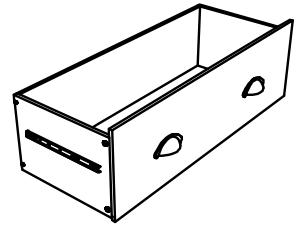

DRAWER 1

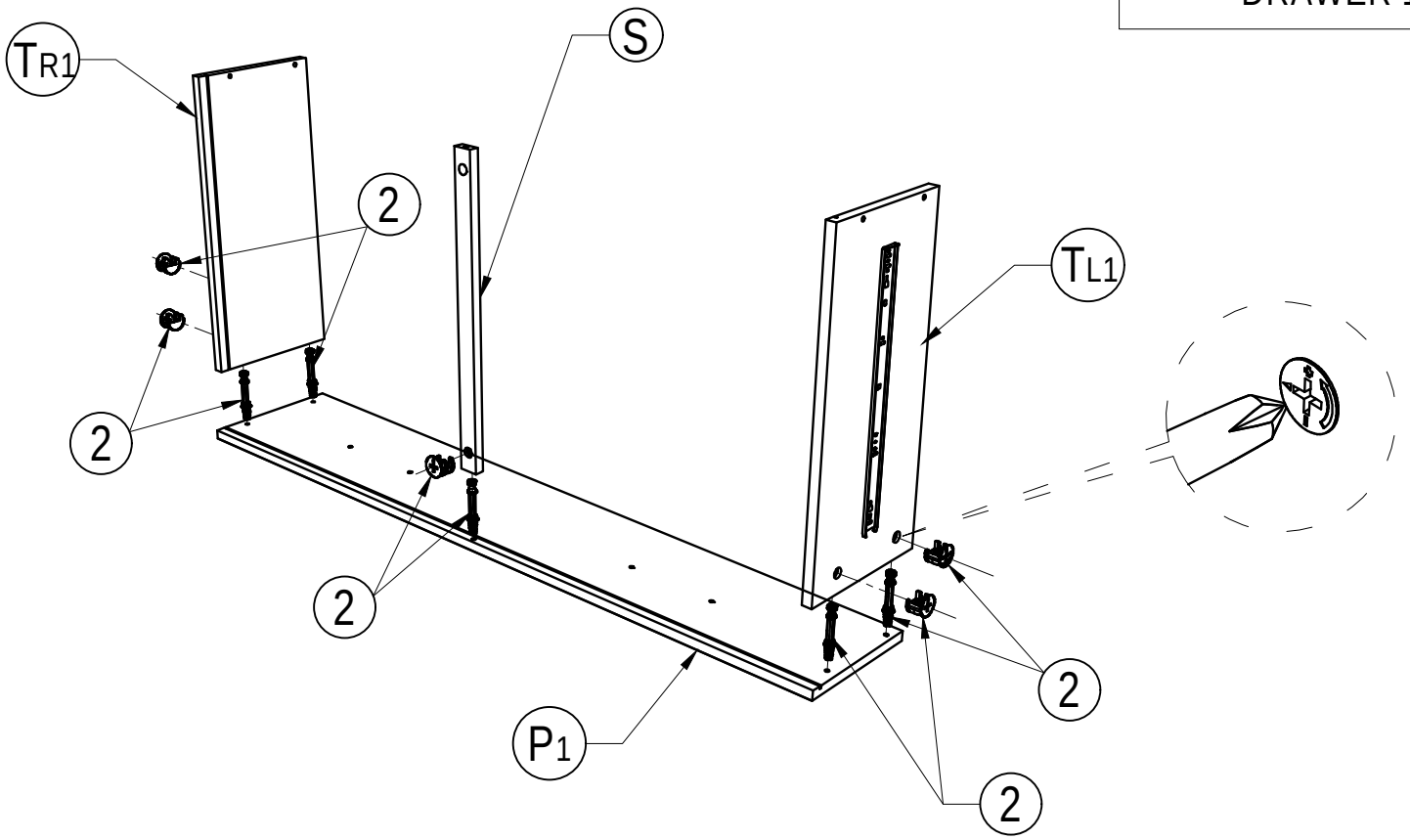

STEP 13

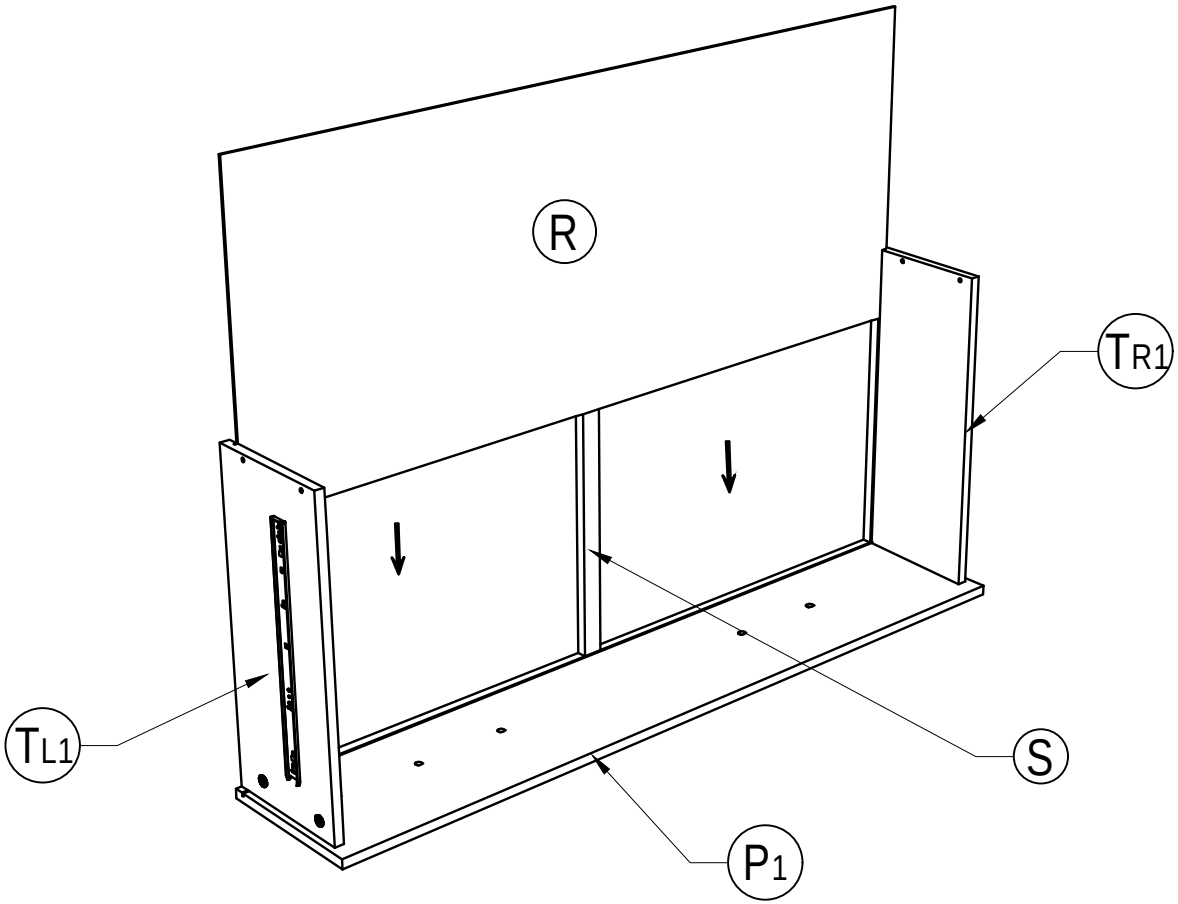

STEP 14

2

1 pc

7

4x30mm
4 pcs

11

1 pc

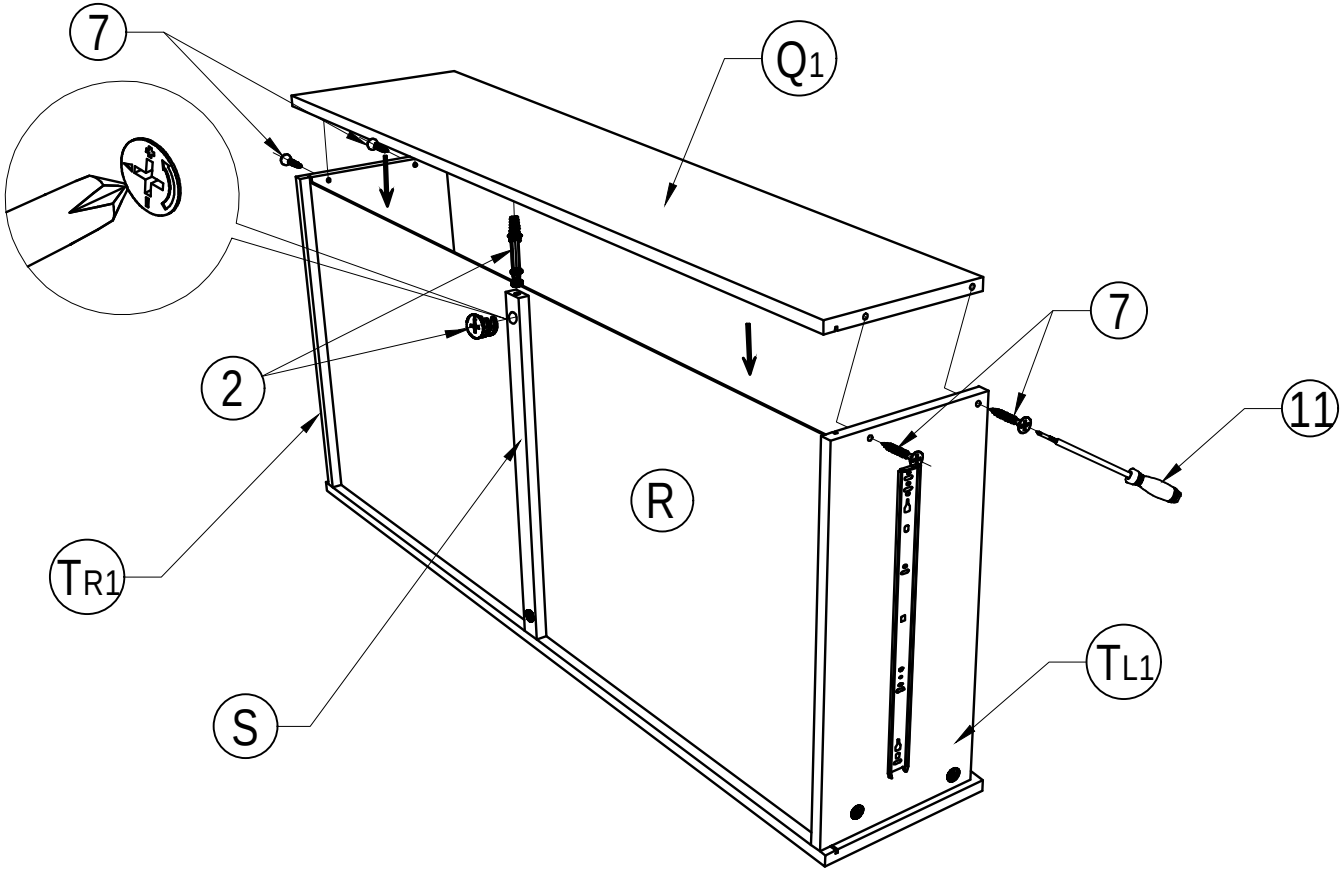

STEP 15

5

5x15mm
4 pcs

9

2 pcs

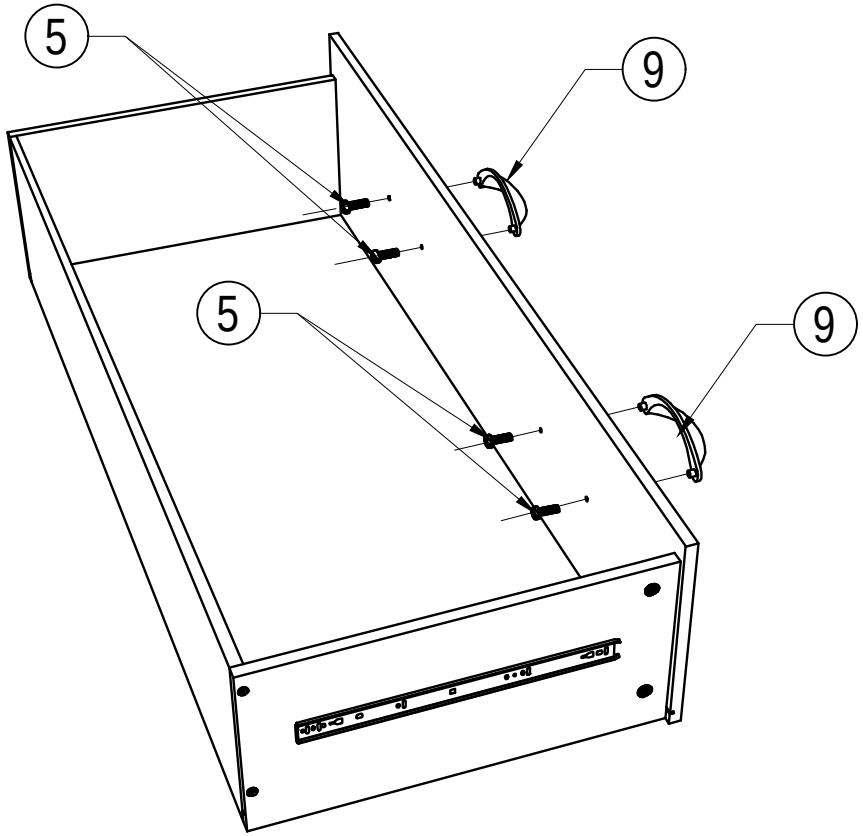

STEP 16

2

5 pcs

15

2 pcs

11

1 pc

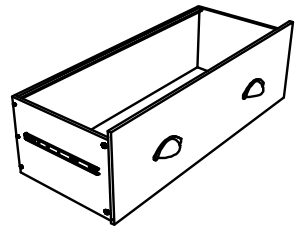

DRAWER 2

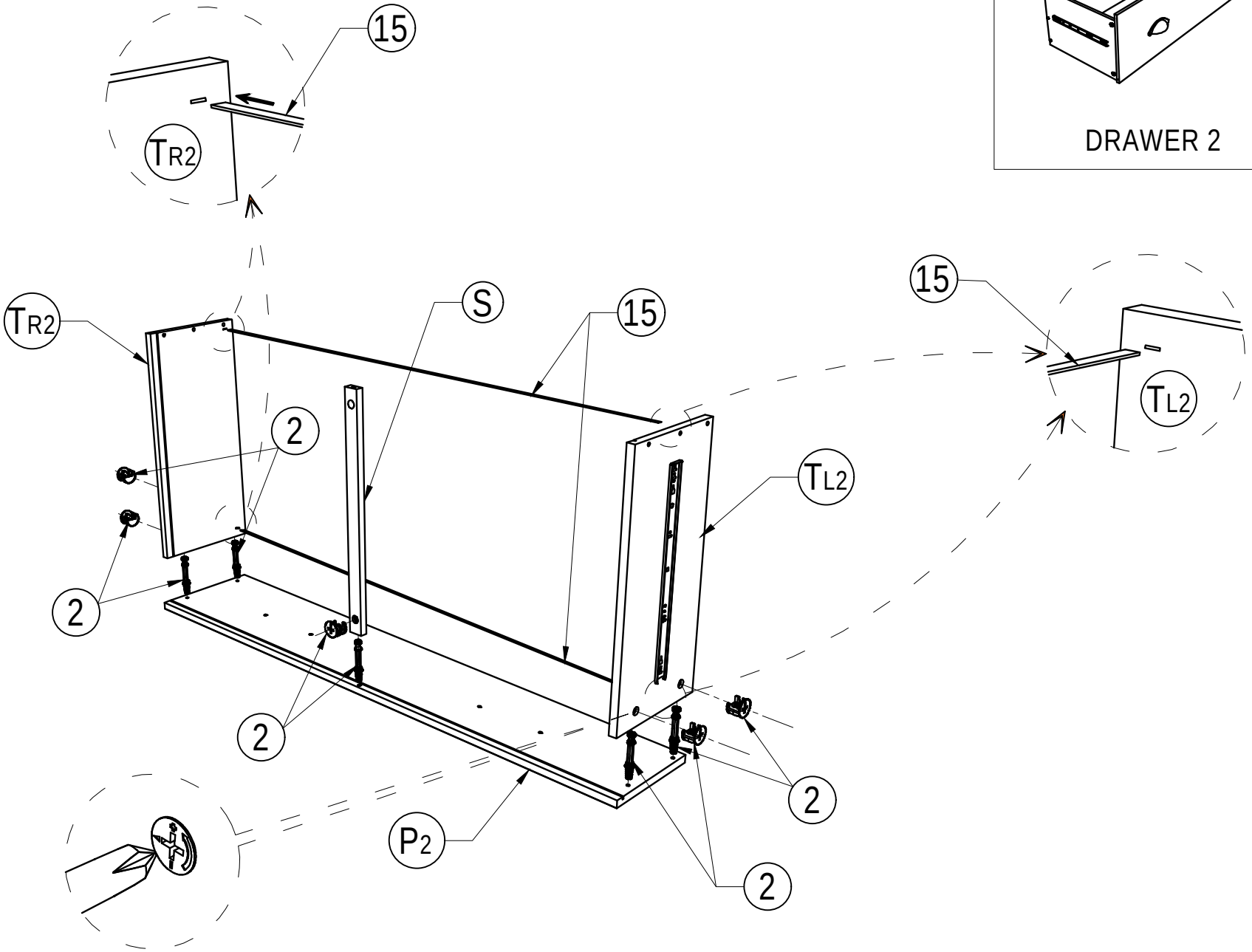

STEP 17

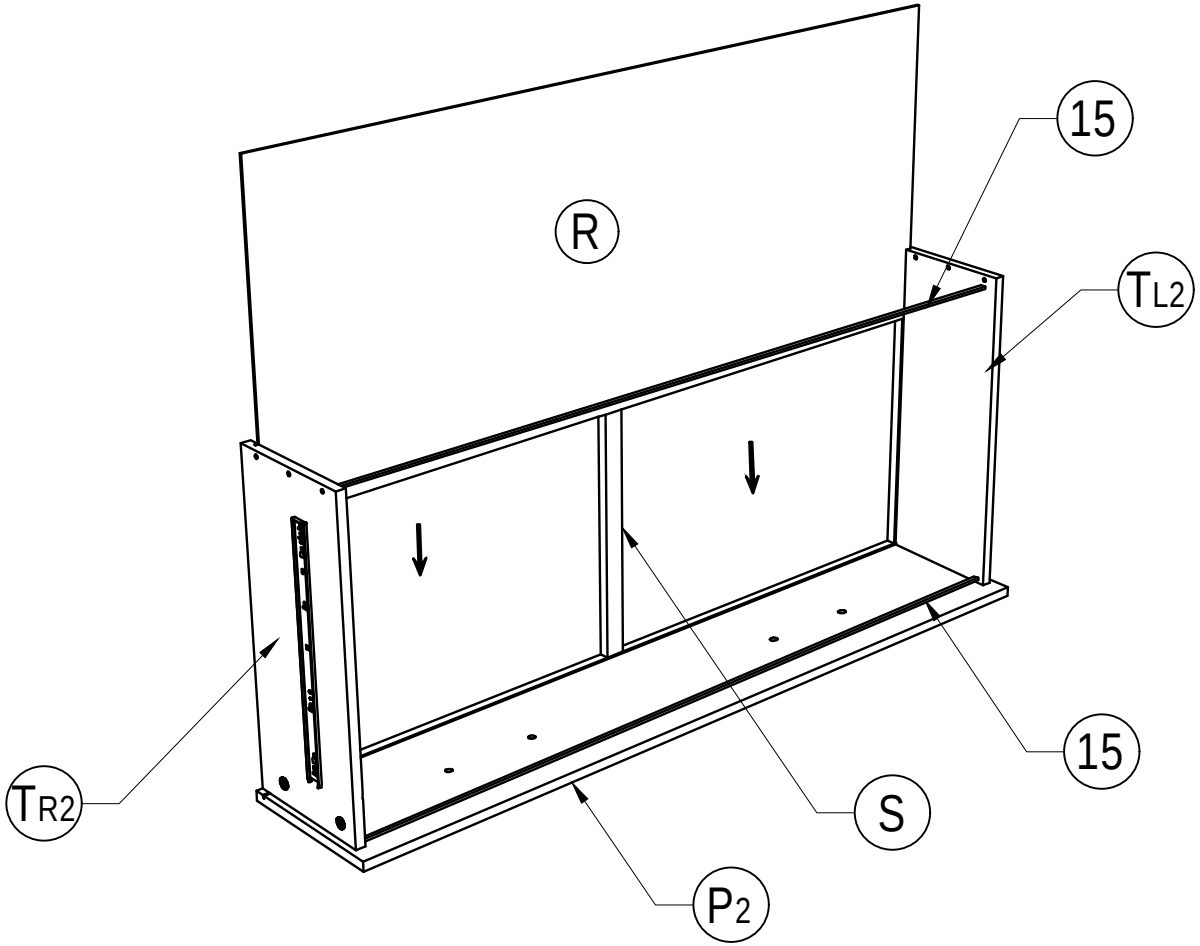

STEP 18

2

1 pc

7

4x30mm
6 pcs

11

1 pc

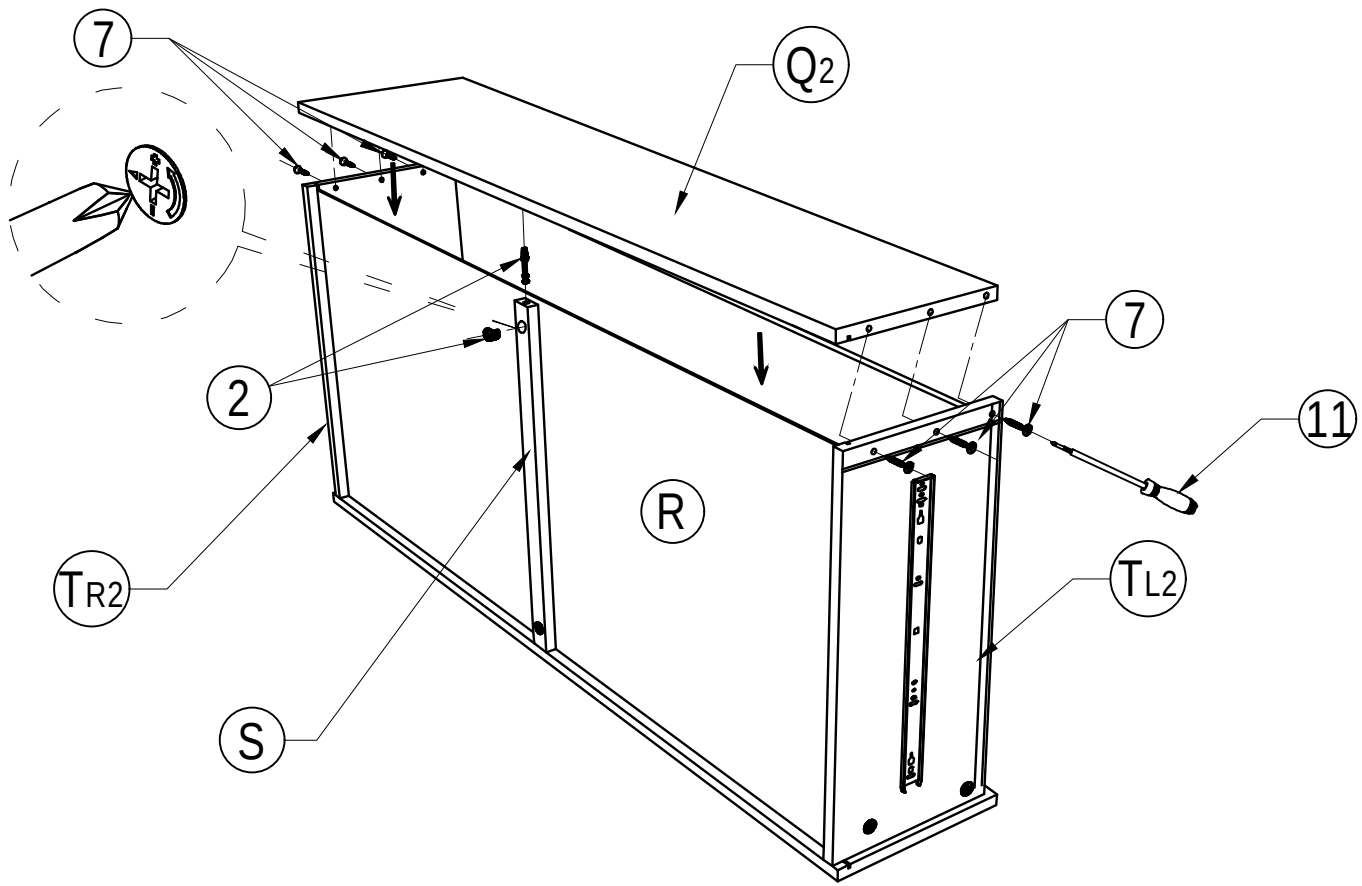

STEP 19

5

5x15mm
4 pcs

9

2 pcs

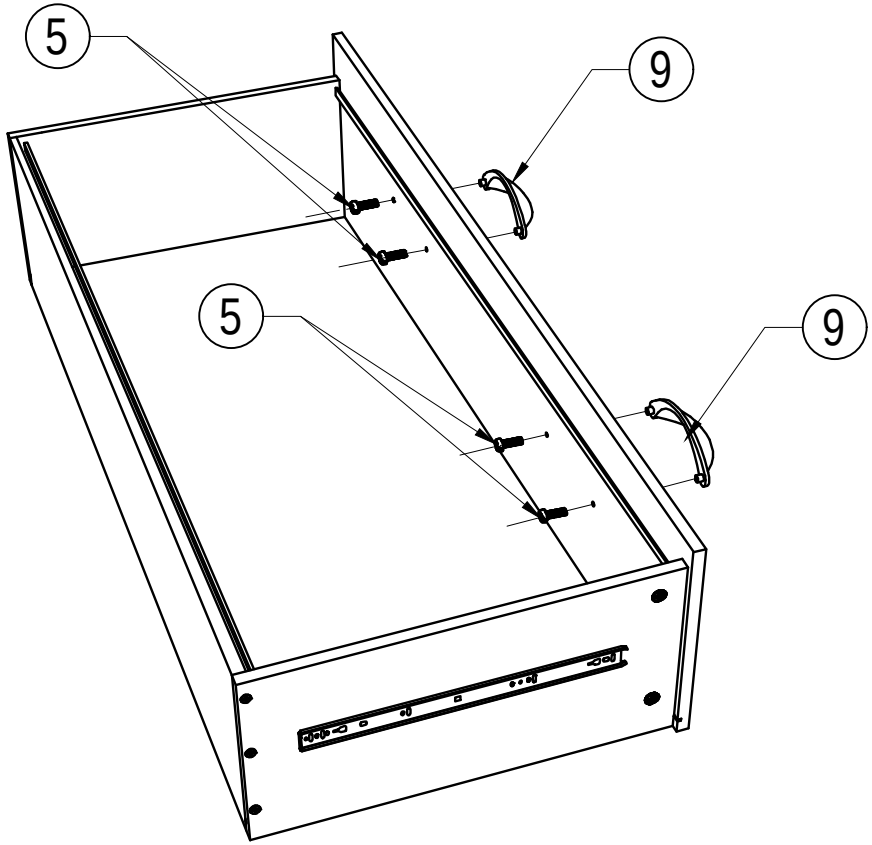

STEP 20

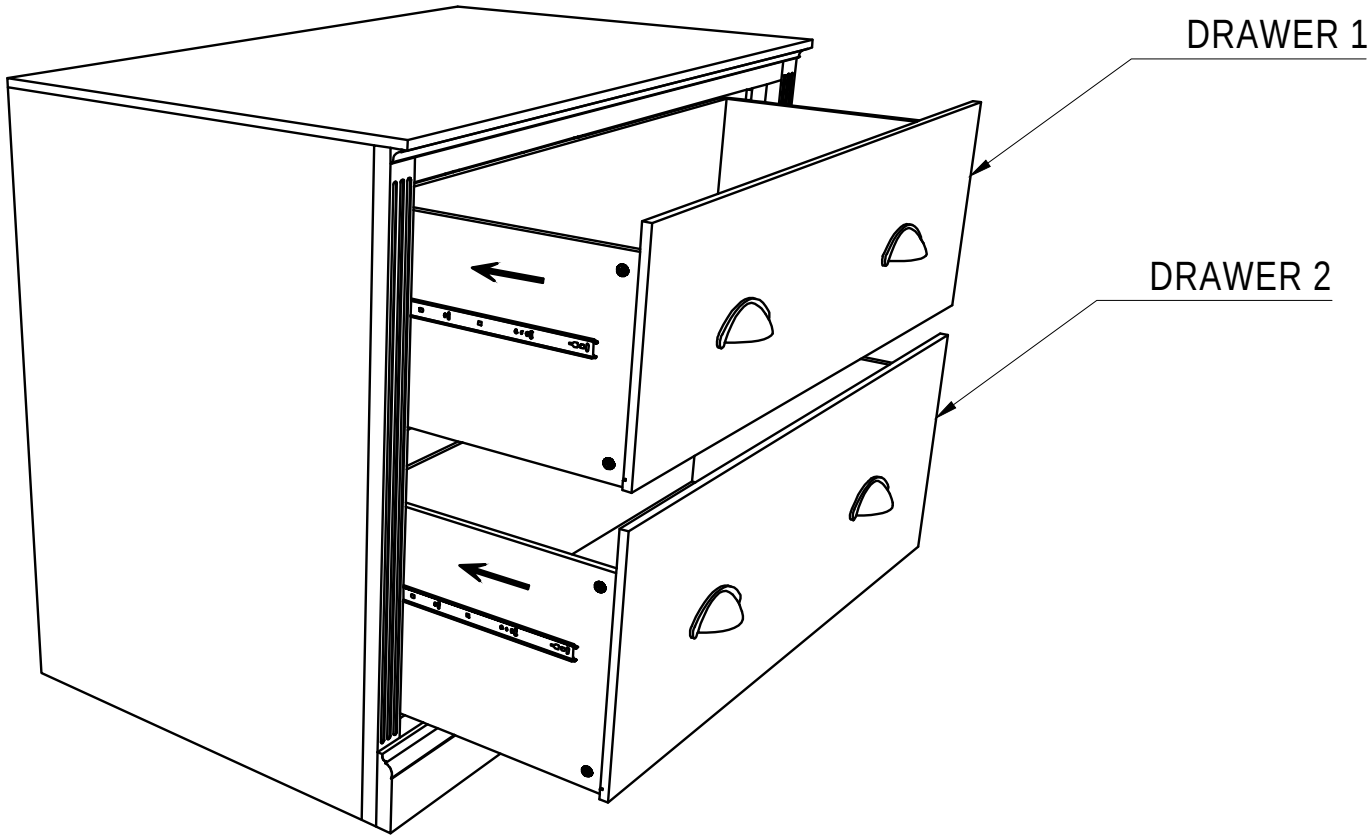

STEP 21

8

3x15mm
22 pcs

11

1 pc

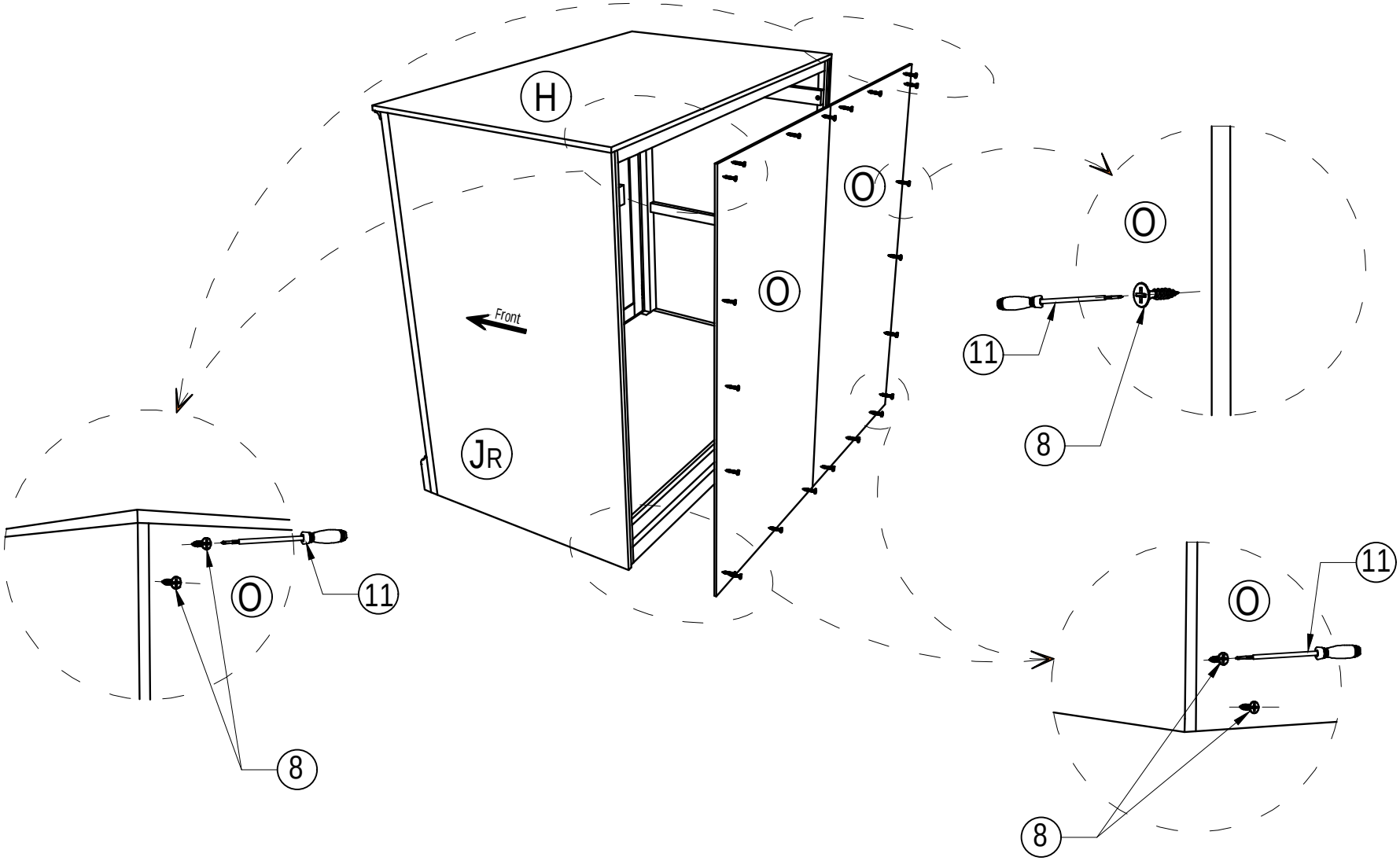

STEP 22

13

20x80mm
2 pcs

14

4x20mm
4 pcs

11
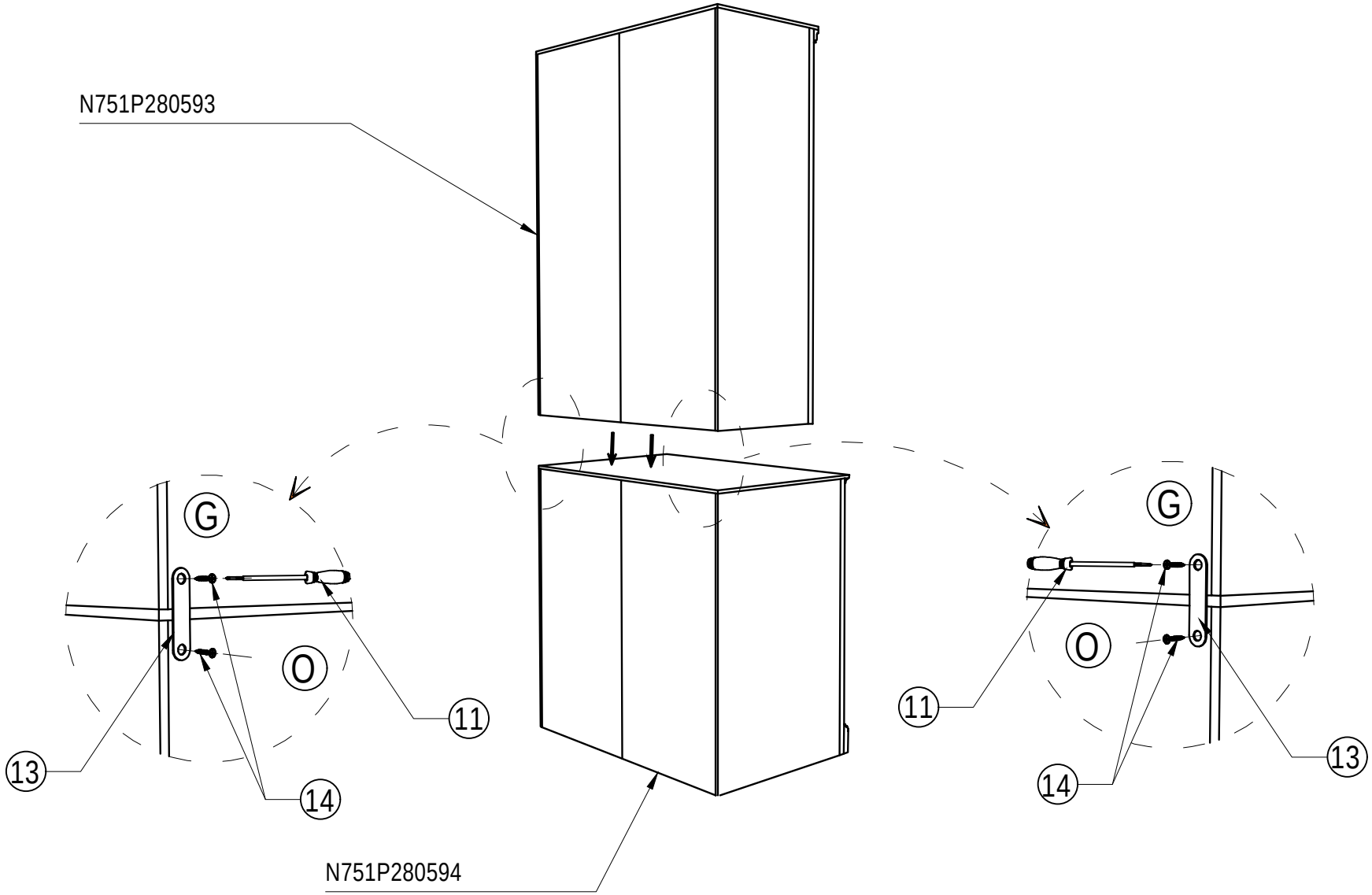
1 pc