TEAR SHEET

Tess 9" Single Sconce

Item # MF 2025SB-WG

Designer: Marie Flanigan

Height: 9.25"
Width: 6"
Extension: 9"
Backplate: 4.25" Round
Finishes: BZ, PN, SB
Shade Treatments: S, WG
Shade Details: 4" x 6" x 5.5"
Socket: E12 Candelabra
Wattage: 6.5 LED B11
Weight: 4 Pounds
Note: 120V Configuration Only |Requires Smaller Outlet Box



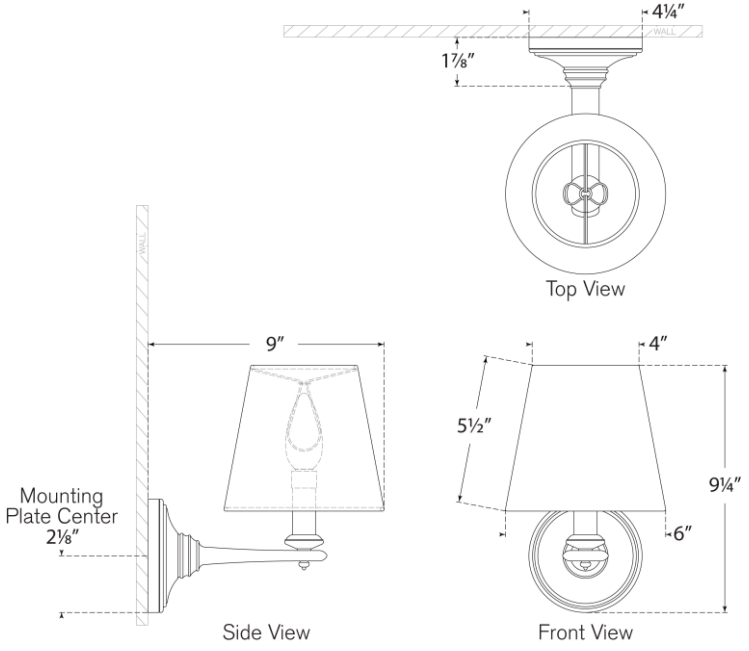

VISUAL COMFORT & CO.