FULL SIZE DAYBED
ASSEMBLY INSTRUCTIONS





Attention

Please use the screws correctly according to the instructions.
Thank you.

Part List

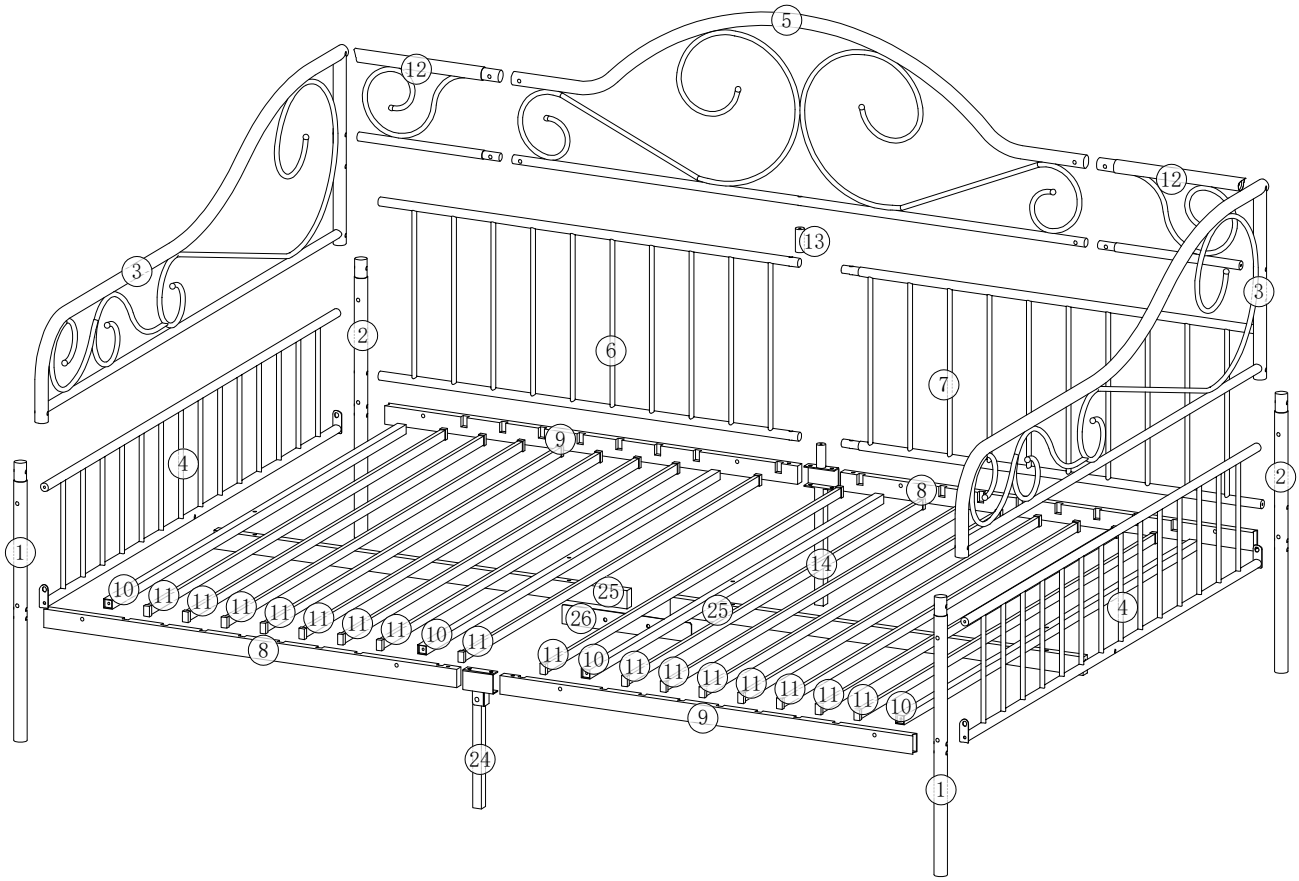

5
12
12
13
3
3
2
6
7
9
4
8
2
1
14
10
11
11
11
11
11
11
11
10
11
25
26
25
4
8
11
10
11
11
11
11
11
11
11
10
9
24
1

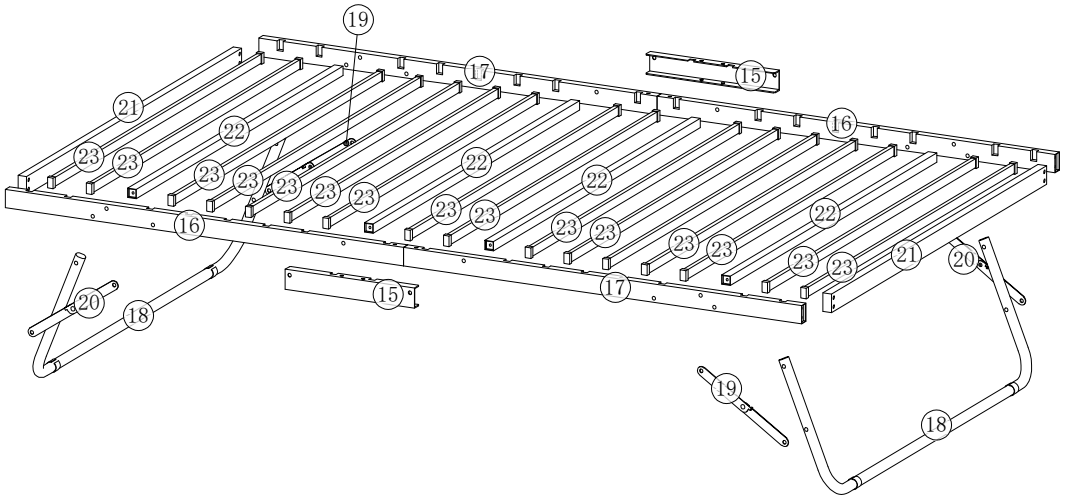

19
17
15
21
22
16
23
23
23
23
23
23
23
22
22
22
16
23
23
23
23
23
23
23
23
23
23
21
20
20
18
15
17
19
18

Parts view

1-2pcs	2-2pcs	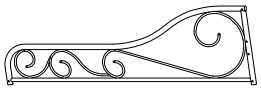 3-2pcs	 4-2pcs
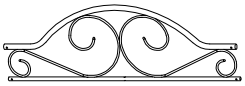 5-1pcs	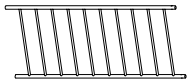 6-1pcs	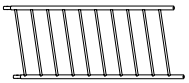 7-1pcs	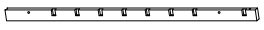 8-2pcs
 9-2pcs	10-4pcs	11-16pcs	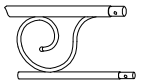 12-2pcs
 13-1pcs	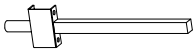 14-1pcs	 15-2pcs	16-2pcs
 17-2pcs	 18-2pcs	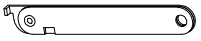 19-2pcs	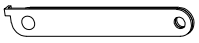 20-2pcs
21-2pcs	22-4pcs	23-16pcs	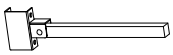 24-1pcs
25-2pcs	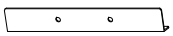 26-1pcs		

Hardware List

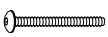 A M6*55mm--4PCS	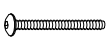 B M6*45mm--25PCS	 C M6*35mm--39PCS	 D M6*20mm--11PCS	 E M6*15mm--13PCS
 F M6*17mm--40PCS	 G 4mm--4PCS	 H 4PCS	 I Ø16mm--4PCS	 J 2PCS

Step 1

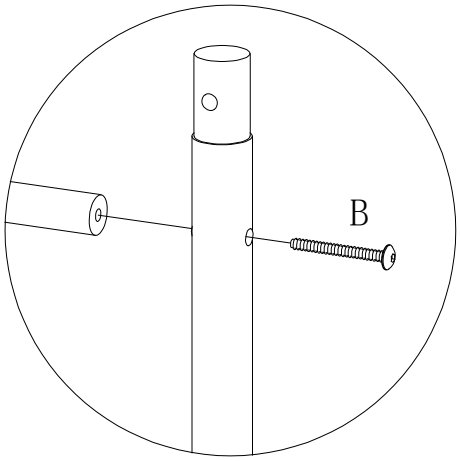

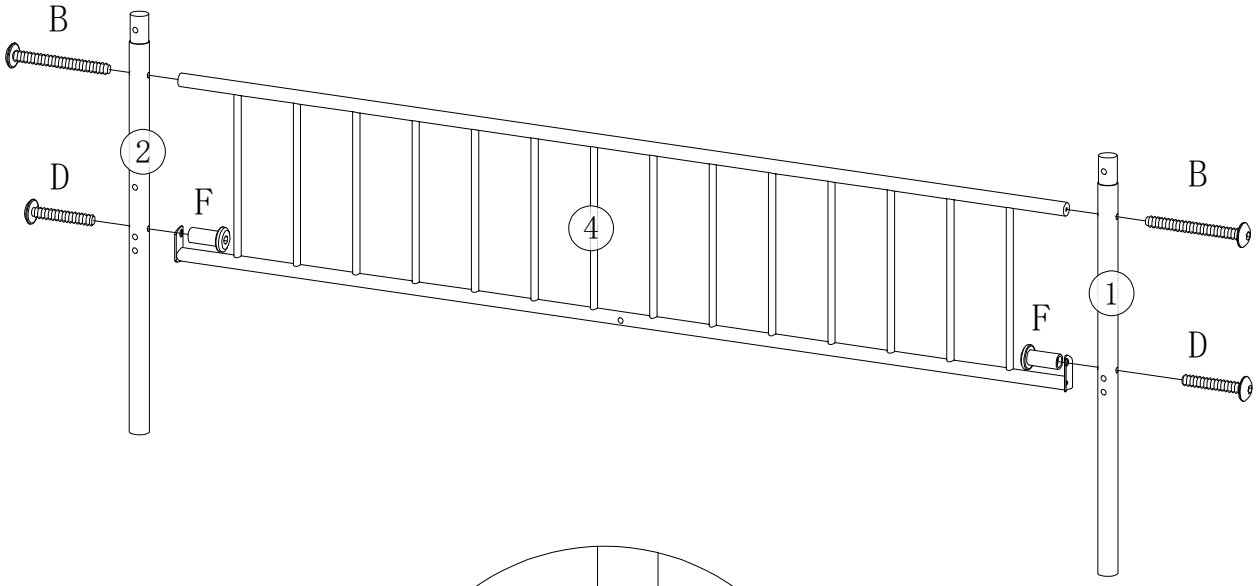

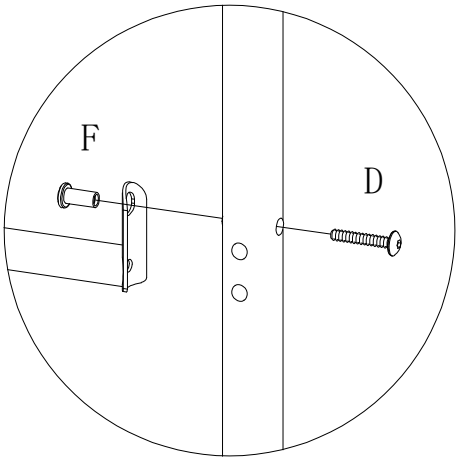

 B M6*45mm--4PCS	 D M6*20mm--4PCS	 F M6*17mm--4PCS	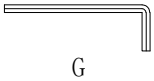 G 4mm--2PCS	

Step 2

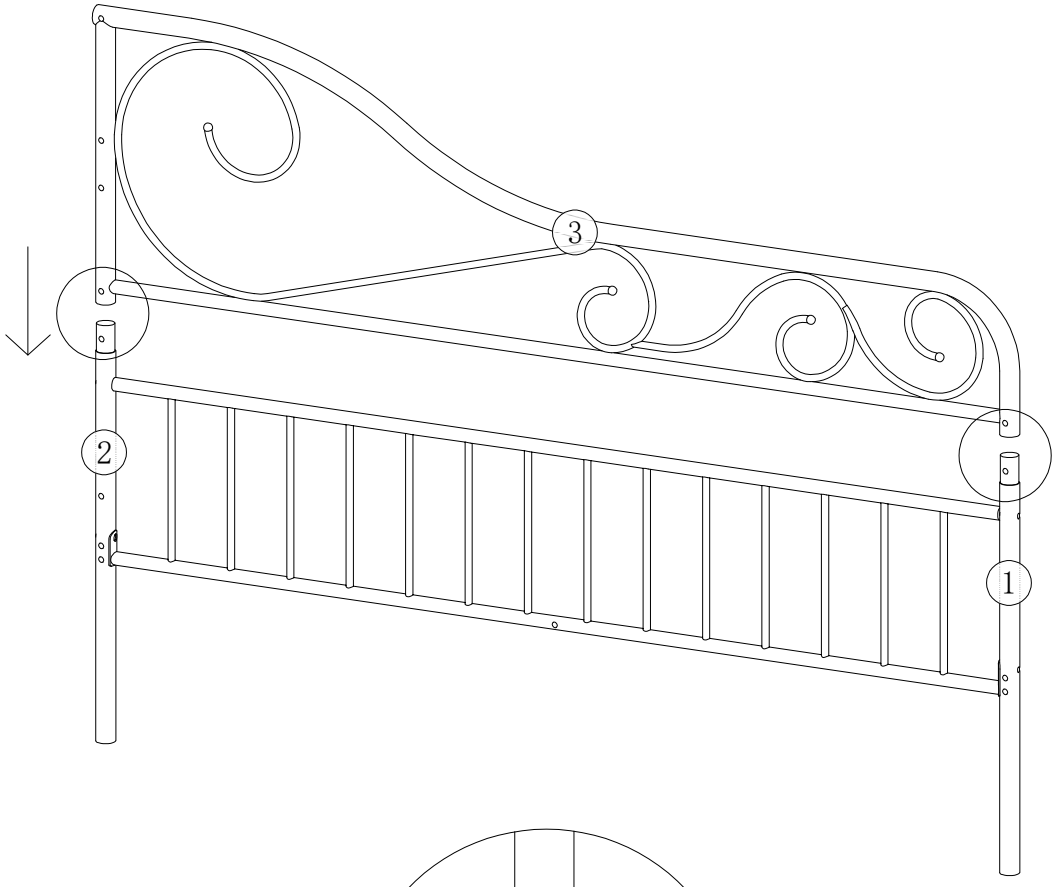

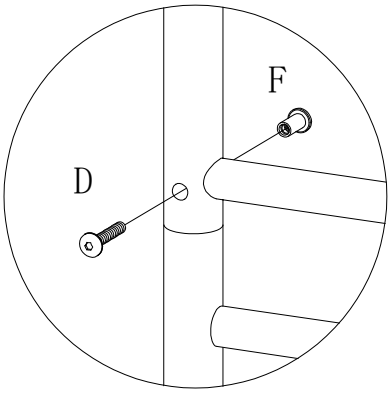

 D M6*20mm--4PCS	 F M6*17mm--4PCS	 G 4mm--2PCS		

Step 3

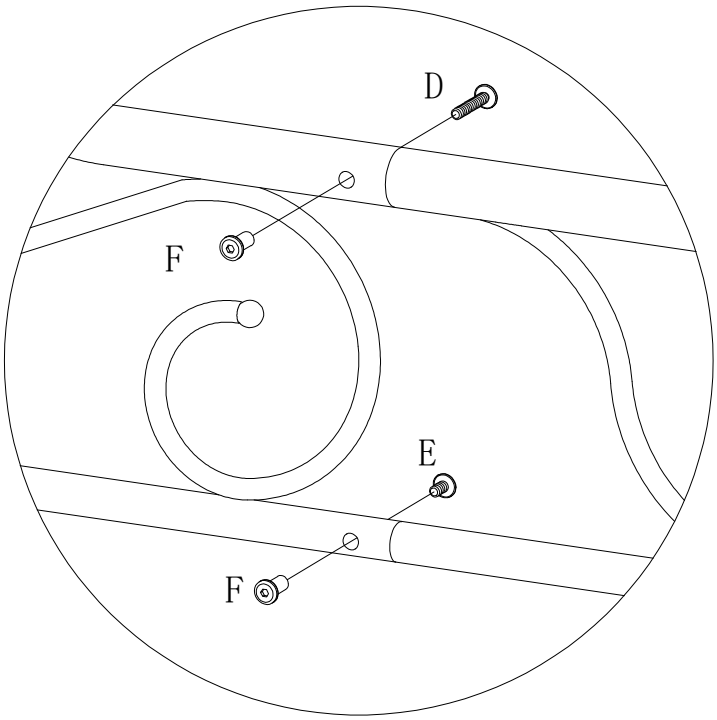

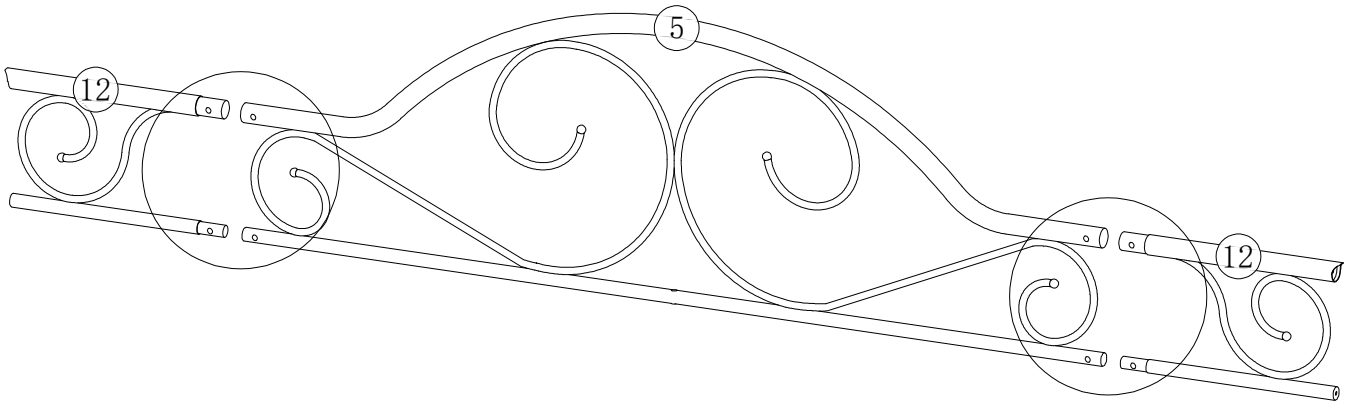

 D M6*20mm--2PCS	 E M6*15mm--2PCS	 F M6*17mm--4PCS	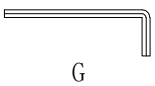 G 4mm--2PCS	

Step 4

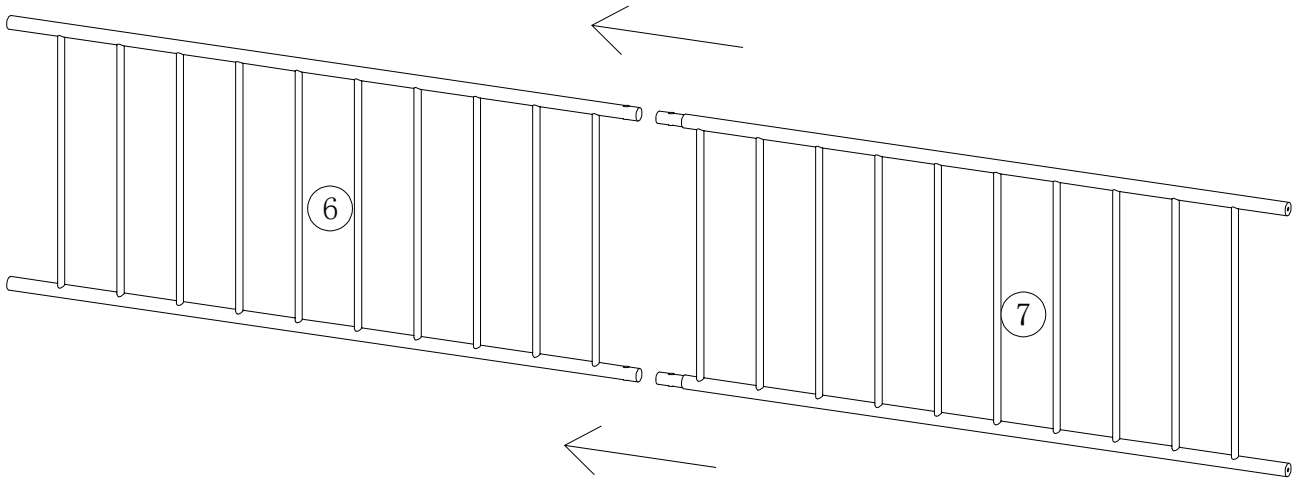

Step 5

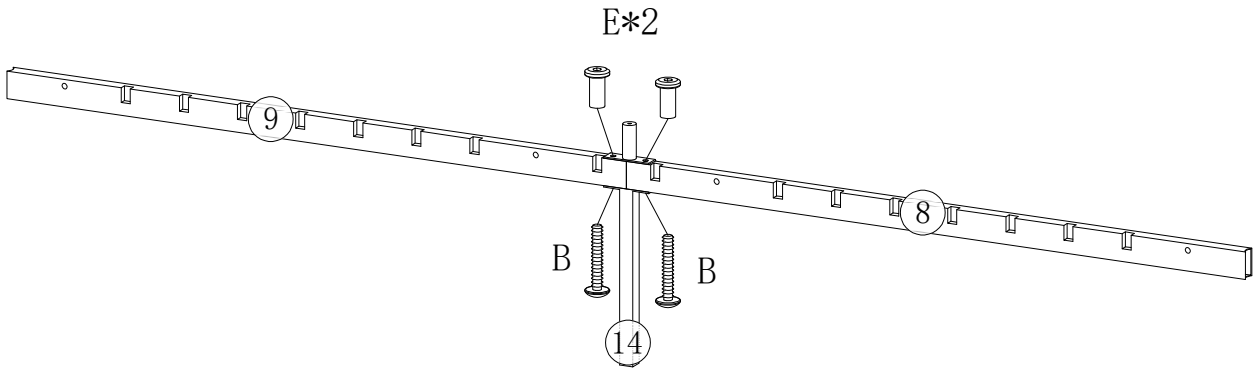

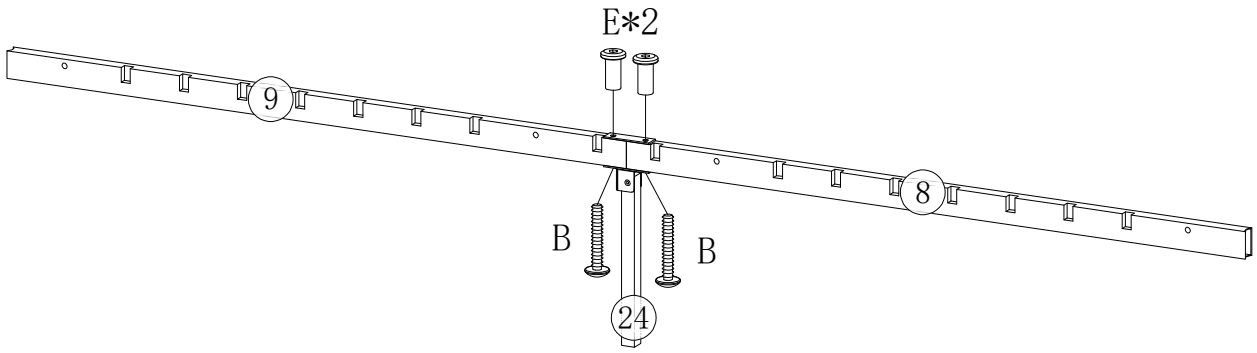

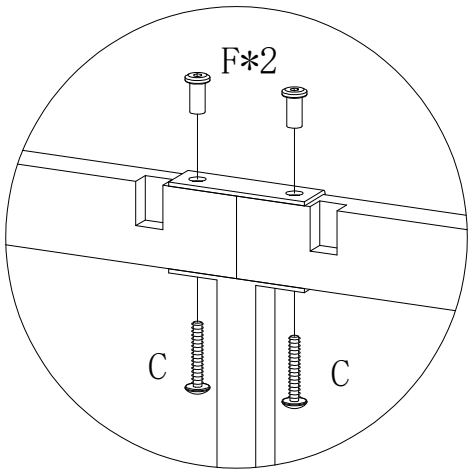

 C M6*35mm--4PCS	 F M6*17mm--4PCS	 G 4mm--2PCS		

Step 6

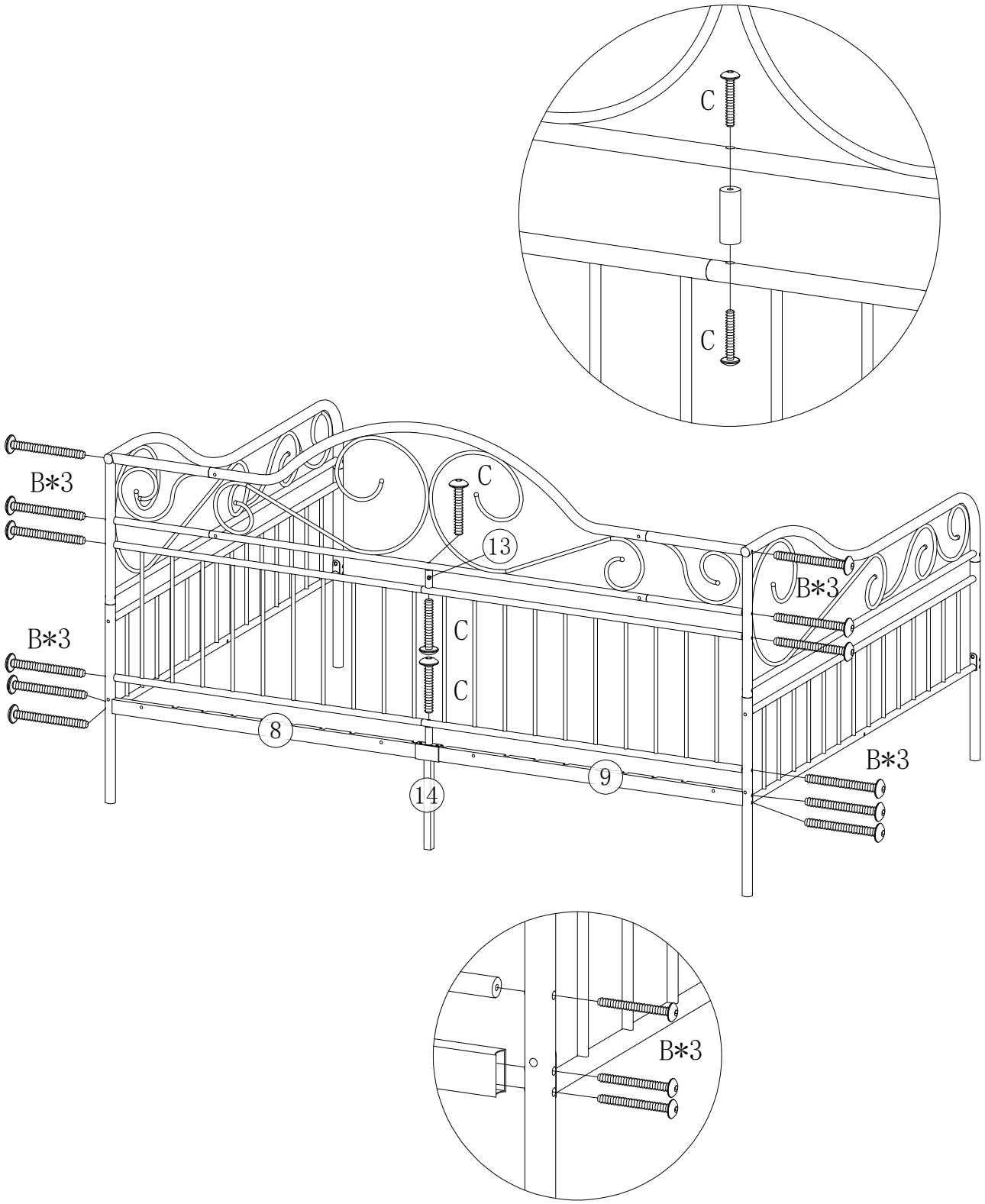

B M6*45mm--12PCS	C M6*35mm--3PCS	E 4mm--1PCS		

Step 7

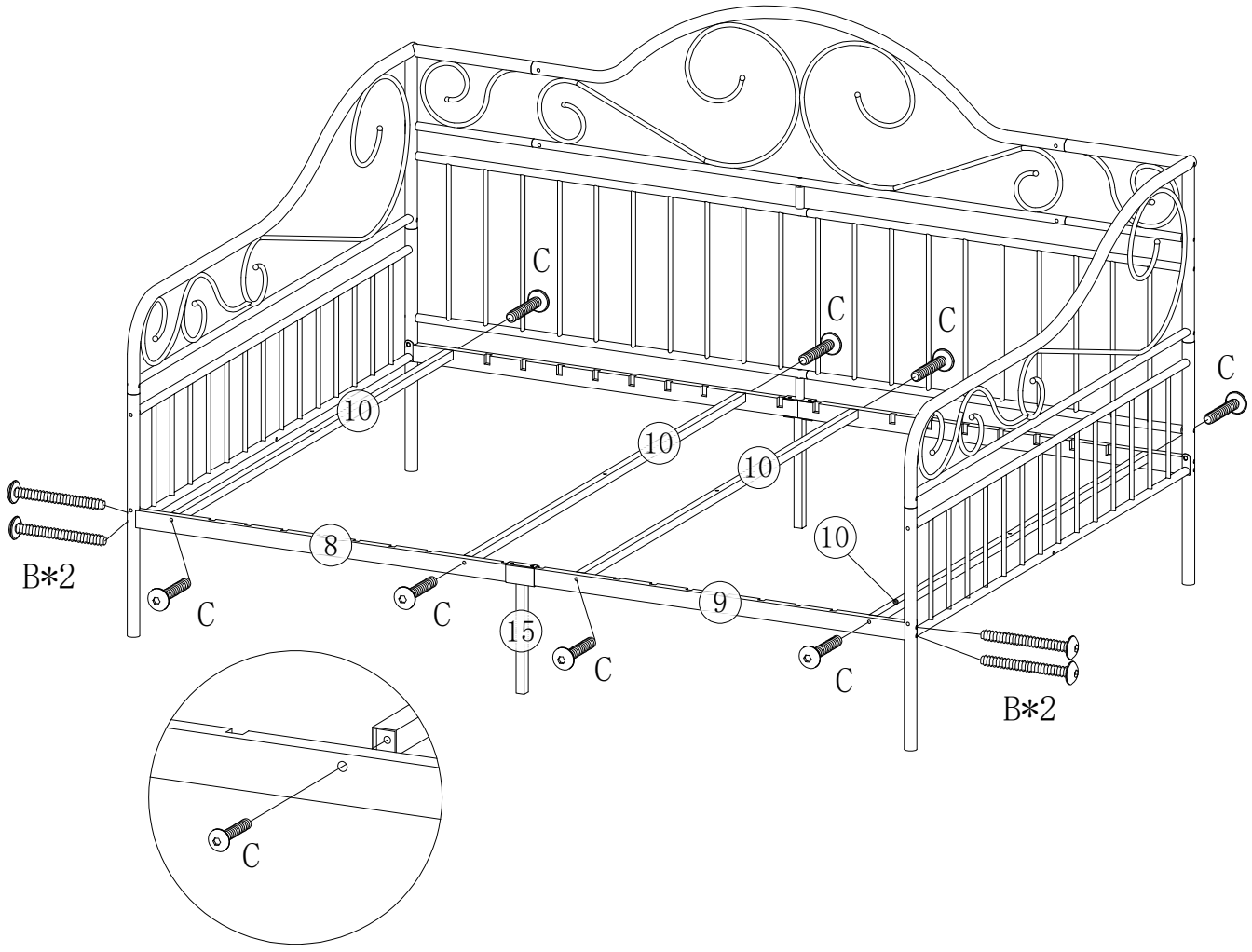

B M6*45mm--4PCS	C M6*35mm--8PCS	G 4mm--1PCS		

Step 8

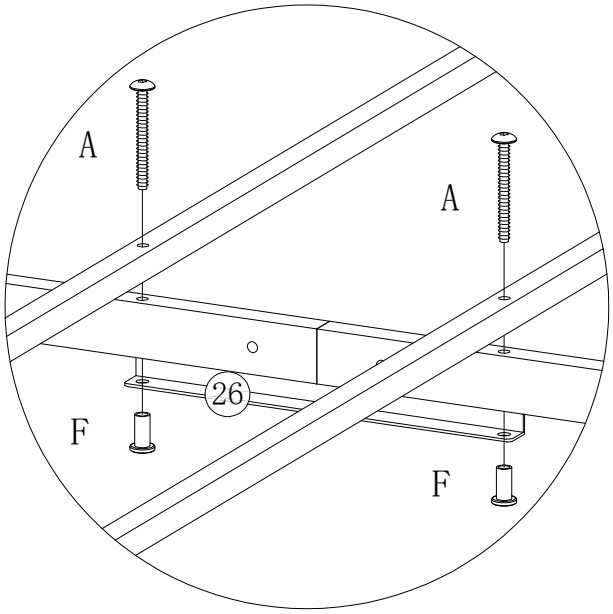

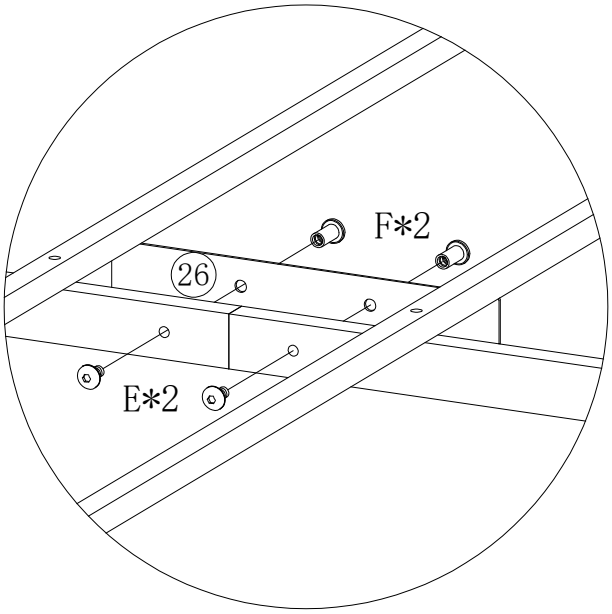



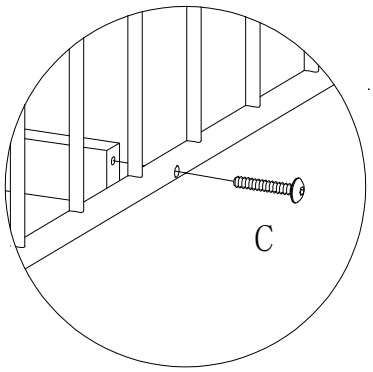

A	C	E	F	G
M6*55mm--4PCS	M6*35mm--2PCS	M6*10mm--2PCS	M6*17mm--6PCS	4mm--2PCS

Step 9



Step 10

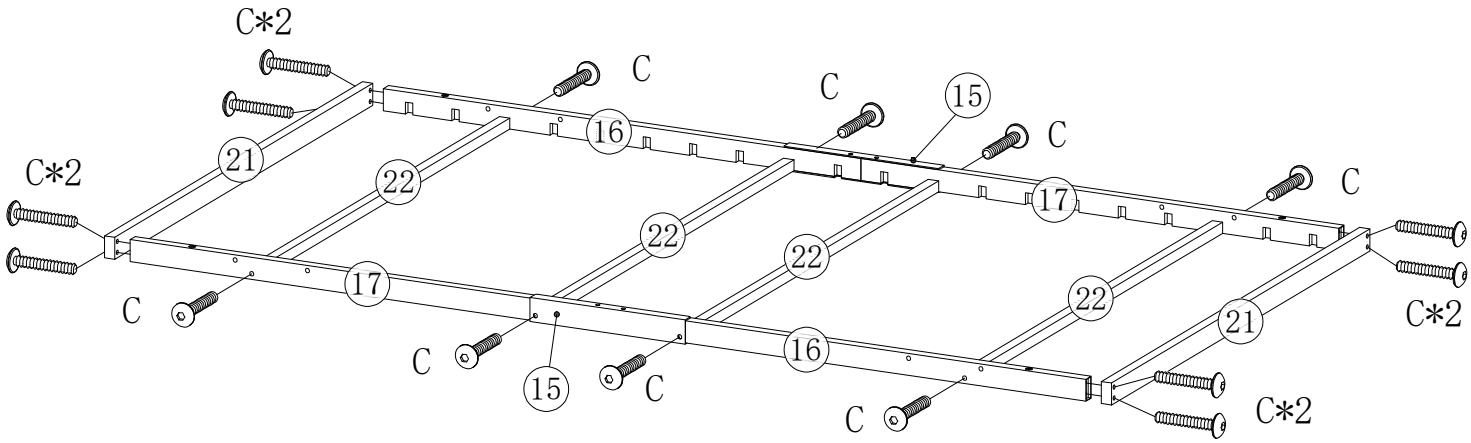

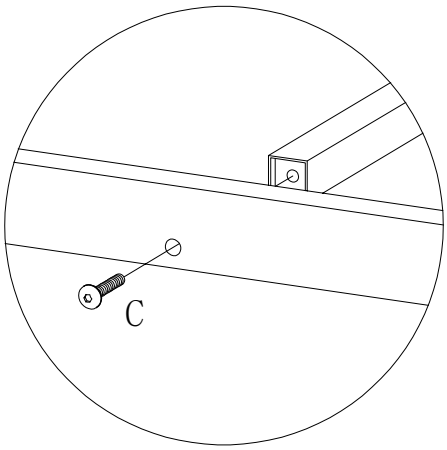

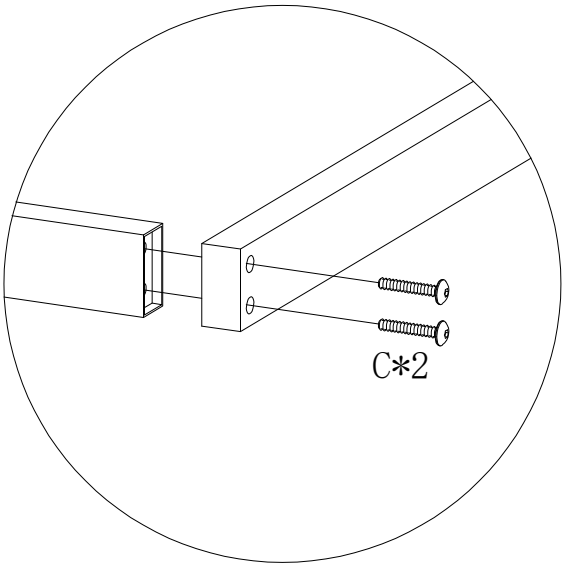

C M6*35mm--16PCS	G 4mm--2PCS			

Step 11

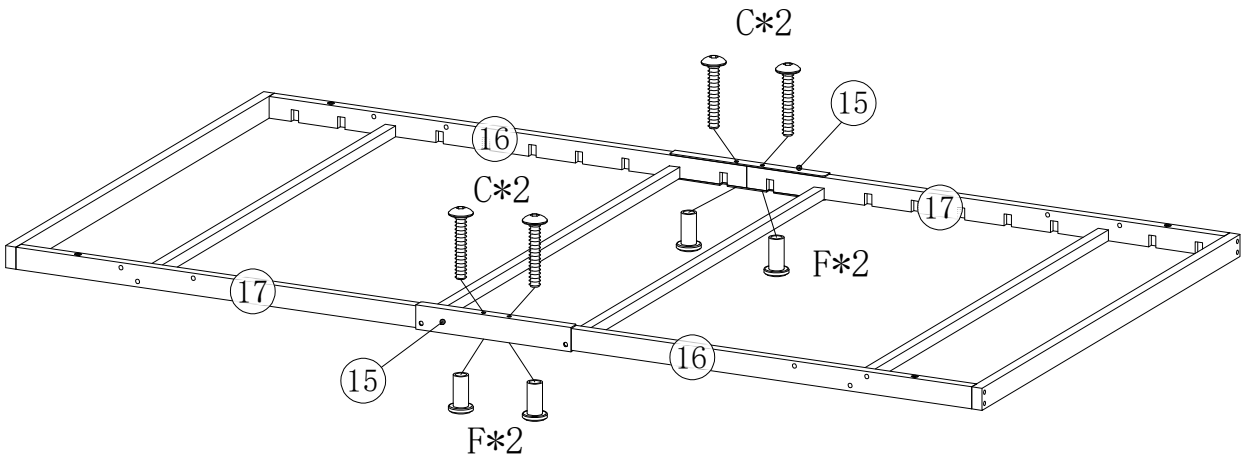

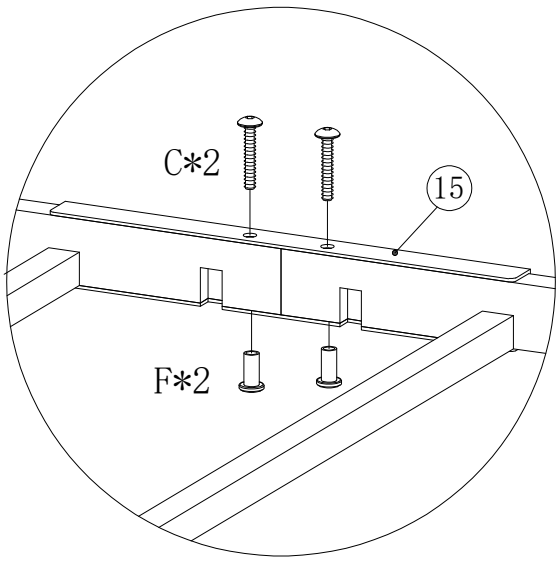

C M6*35mm--4PCS	F M6*17mm--4PCS	G 4mm--2PCS		

Step 12

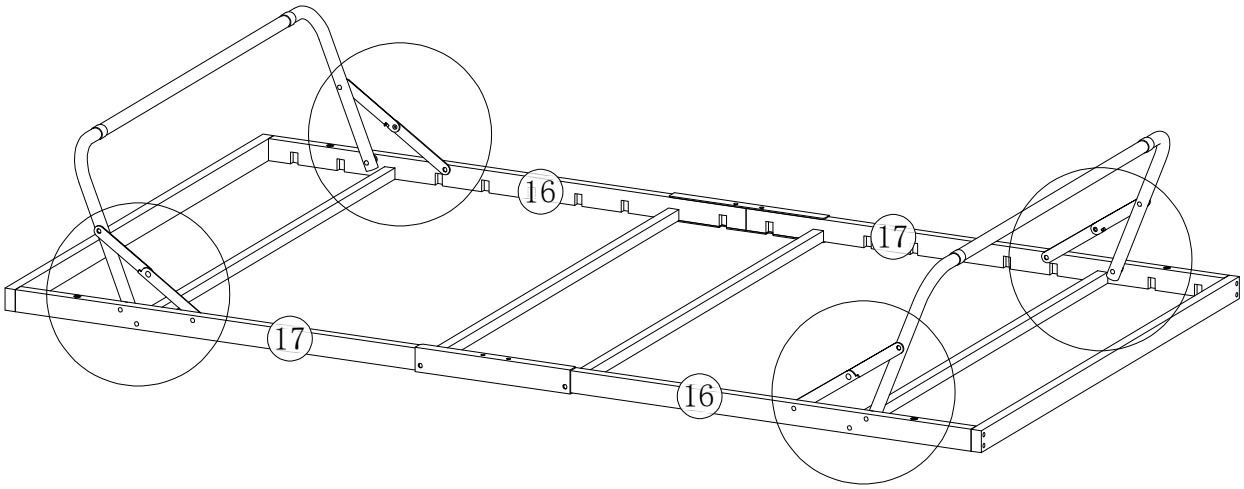

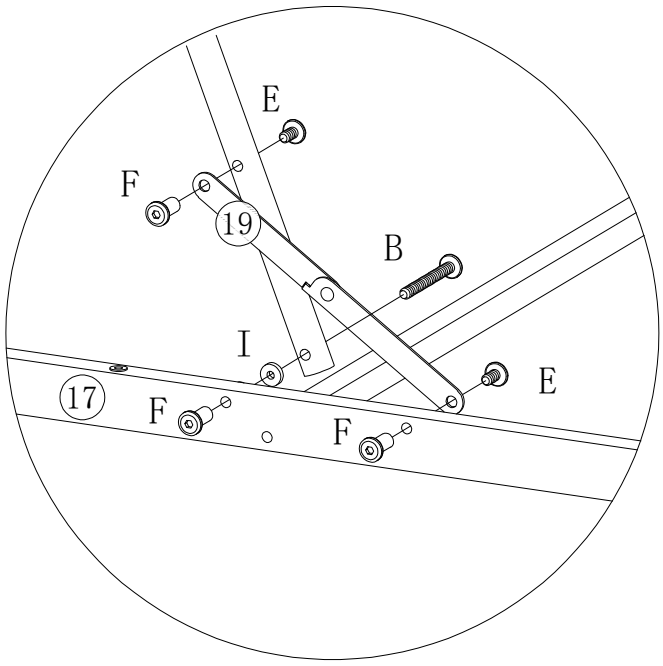

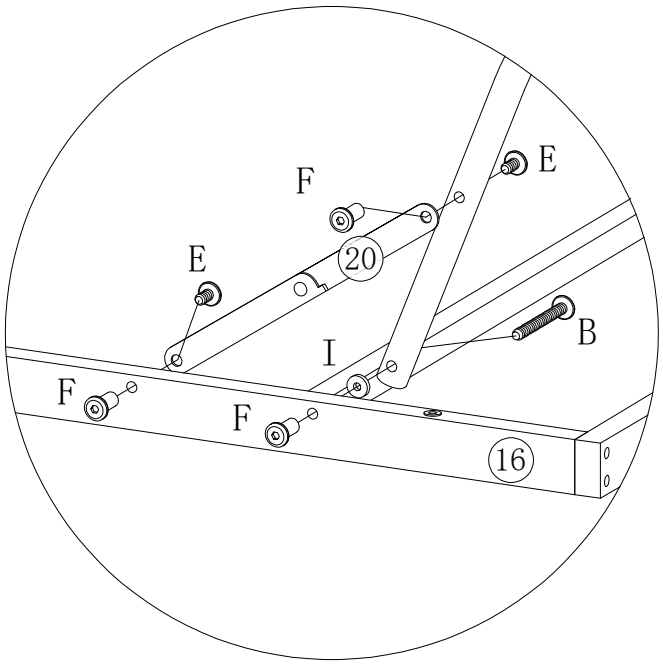

			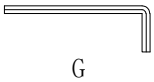	
B M6*45mm--4PCS	E M6*15mm--8PCS	F M6*17mm--12PCS	G 4mm--2PCS	I Ø16mm--4PCS

Step 13

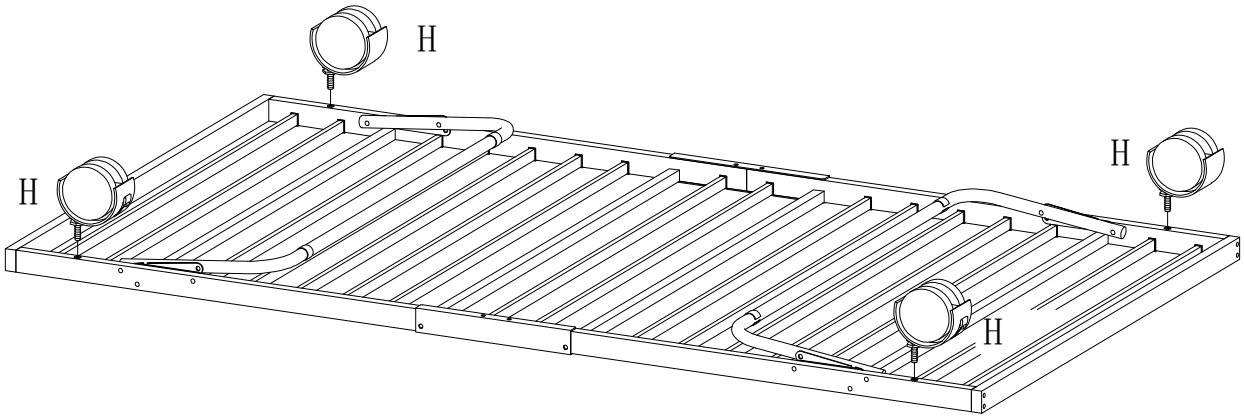

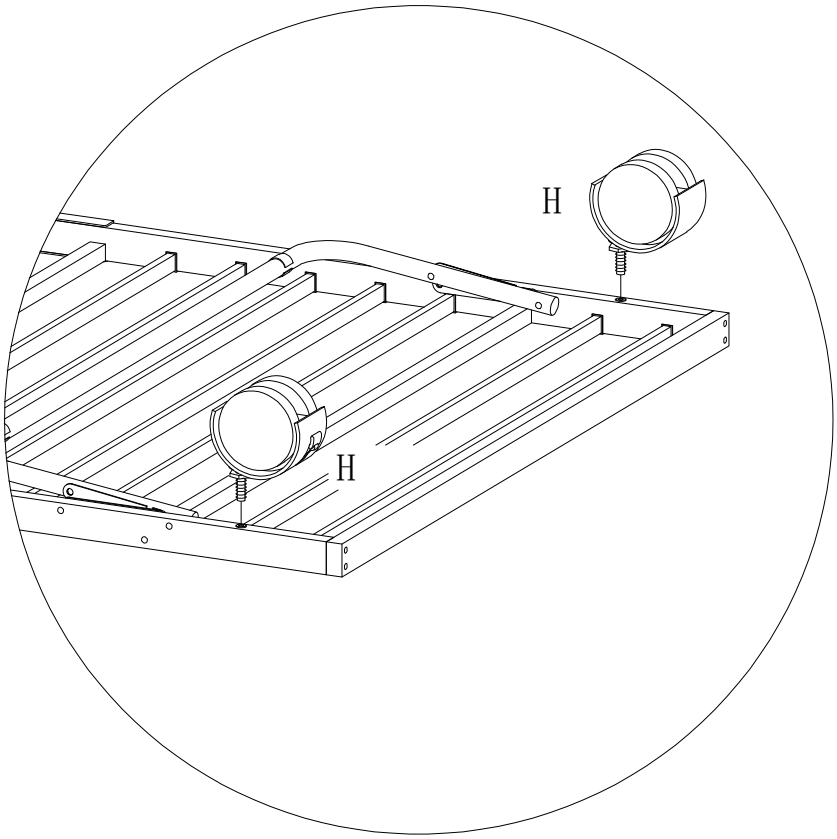

 H 4PCS				

Completed





Please tighten all screws before use, thank you.